CHINT ELECTRIC

Empower the World

CHINT，Smart Energy Solution Provider

CHINT is a world renowned smart energy solution provider.

To comply with the trend of integrated development of modern energy, intelligent manufacturing and digital technology, CHINT has adopted One Cloud & Two Nets as the development strategy. As the carrier of intelligent technology and data application, CHINT Cloud fulfills corporate internal and external digital application and services. Relying on the Industrial Internet of Things (IIoT), CHINT builds its intelligent manufacturing system and practices intelligentized application of the electrical industry; relying on the Energy Internet of Things (EIoT), CHINT builds its smart energy system and explores the regional EIoT mode.

Focusing on energy supply, storage, transmission, allotment and consumption system, CHINT considers new energy, energy allotment, big data and energy value-added services as core businesses, with photovoltaic equipment, energy storage, power transmission and distribution, low-voltage apparatuses, intelligent terminals, software development and control automation as pillar businesses, to develop the platform enterprise and to build the regional smart energy comprehensive operation management ecosphere, ultimately, to provide the public institutions, industry & commerce and terminal users with a package of energy solutions.

Founded in 1984, CHINT has developed business network in over 140 countries and regions with more than 30,000 employees worldwide. CHINT has reached annual sales of 70 billion yuan in 2018, ranking among the top 50 Asian Listed Companies and the top 100 China Private Enterprises.

CHINT has actively explored overseas markets, has established 3 research and development (R&D) centers in Europe, North America and Asia Pacific, 6 global marketing areas and manufacturing bases in Thailand, Malaysia, Egypt, Singapore and Vietnam.

CHINT has stuck to the industrial development and innovation-driving concept, actively promoting the development of global R&D system. Till 2018, CHINT has won more than 4,000 patent licenses and 5,000 patent applications, on top of that, CHINT leaded the formulation of 185 industrial and national standards, and won 32 national and provincial science and technology awards.

CHINT has unswervingly adhered to people-oriented and value-sharing culture with the mission of "making the electric power even safer, green, convenient and efficient". CHINT builds its image of green, energy-saving, sustainable innovation, reliability comprehensiveness, and win-win cooperation with "customer-focused, innovation, humble learning, integrity, collaboration, responsibility" as core values, and "creating values for customers, seeking career development of employees and taking on responsibilities for the society" as operation concepts.

CHINT has positively taken on its social responsibilities. It has successively invested and set up "CHINT Moral Quality and Academic Excellent Scholarship for Chinese Middle School Students", "CHINT Education Fund for Impoverished Undergraduates of Zhejiang Province", and initiated the establishment of "China Red Ribbon Foundation". CHINT has invested 90million yuan to establish the "Commonweal Foundation of CHINT". So far CHINT has donated more than 300million yuan for social welfare undertakings such as education donation, earthquake resistance and disaster relief, social welfare entrepreneurship, ecological and environmental protection.

Through the technological innovation and remarkable contribution to the industry, CHINT has successively won honors and titles such as "China Grand Awards for Industry", "National Quality Management Award", "China Outstanding Private Scientific and Technological Enterprise", "Top 10 Enterprises with the most Core Competitiveness of China Machinery Industry" and "China Charity Award" and "China Charity Award", etc.



«Электро-Профи» - www.ep.ru

CHINT "One Cloud & Two Nets" Strategy

CHINT Cloud

The carrier of intelligent technology and data application in connecting enterprise internal manufacturing and business management data and fulfilling corporate internal and external digital application and services.

CHINT EIoT

A user-driven multi-energy complementary intelligent energy system, providing the public institutions, industry & commerce and terminal users with a package of energy solutions.

CHINT IIoT

An intelligent manufacturing system focusing on the enterprise digital transformation, building and developing a flexible, efficient and intelligent industrial system.

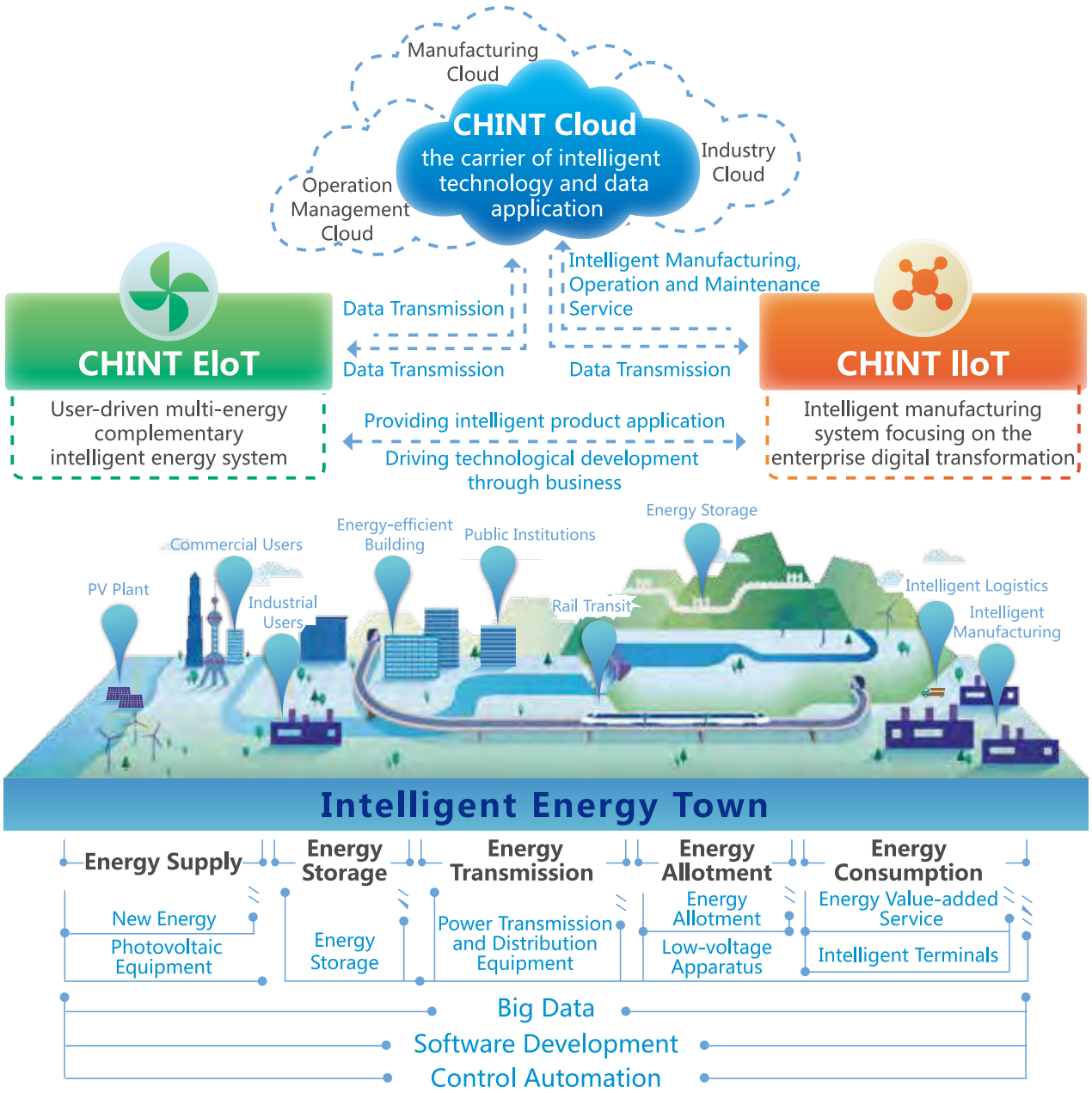

«Электро-Профи» - www.ep.ru

CHINT EIoT

A user-driven multi-energy complementary intelligent energy system, providing the public institutions, industry & commerce and terminal users with a package of energy solutions.

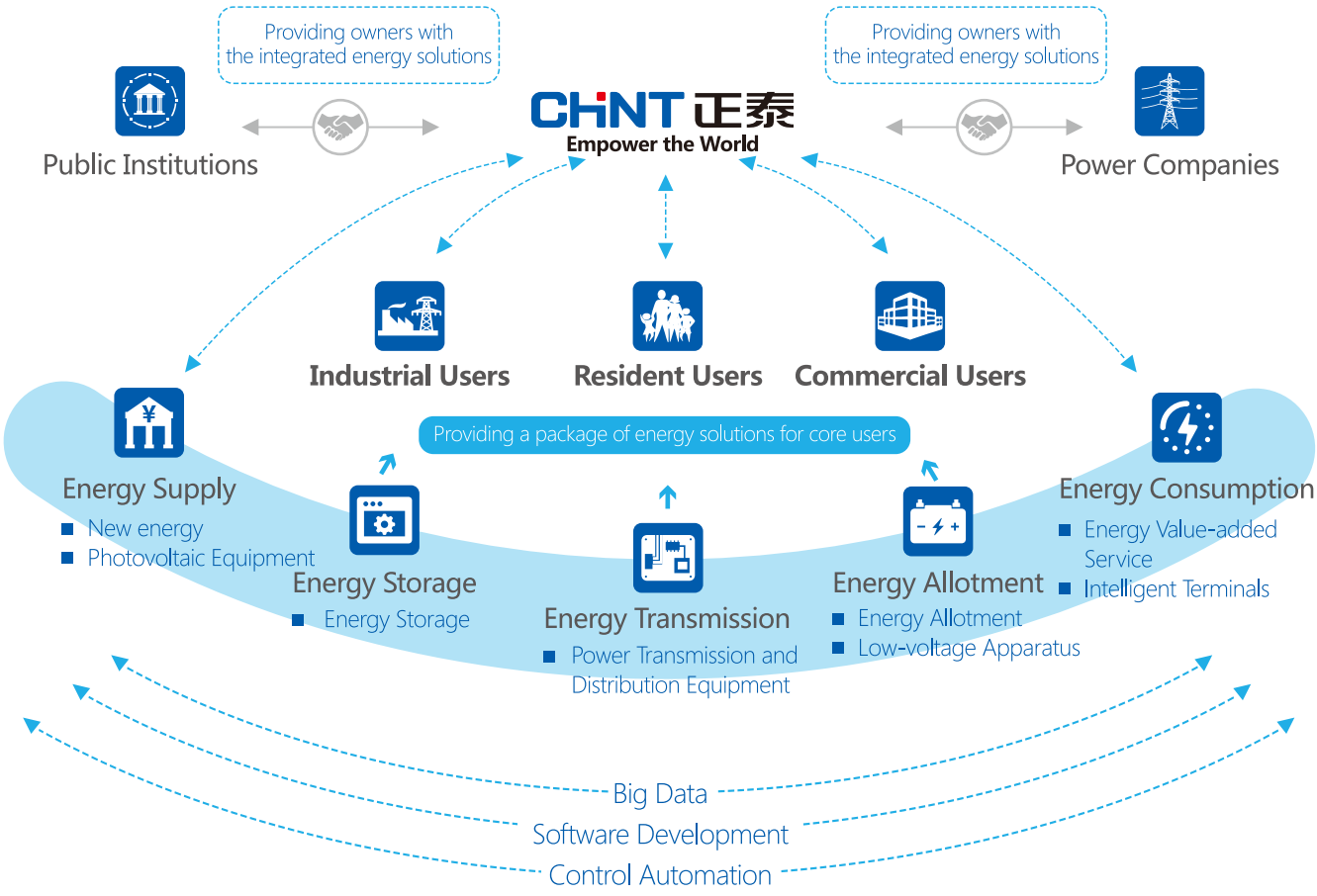

«Электро-Профи» - www.ep.ru

CHINT IIoT

Intelligent manufacturing system focusing on the enterprise digital transformation

- The first group of Sino-Germany Intelligent Manufacturing Cooperation Pilot Demonstration Projects made public by the Ministry of Industry and Information Technology
- "PV manufacturing+Internet" transparent factory opened up to the worldwide users
- One of 94 new intelligent manufacturing mode application projects made public in 2015
- Intelligent manufacturing integration system
- Big data full-process tracking
- Full-process automatic quality monitoring

The Thinking Factory

——in Hangzhou





The Transparent Internet Factory

—— in Haining





The Digital Electric Apparatus Plant

——in Wenzhou





«Электро-Профи» - www.ep.ru

CHINT ELECTRIC

Empower the World

Reliable quality, Best-selling Worldwide

3 global R&D centers :
Europe、North America、Asia Pacific

6 worldwide marketing areas :
Asia Pacific、Western Asia and Africa、Europe、Latin America、North America、China

13 manufacturing bases :
China (Wenzhou, Shanghai, Hangzhou, Jiaxing, Xianyang, Jiuquan, Jinan), Thailand, Egypt, Singapore, Vietnam, Malaysia, Algeria (production line)

20 overseas subsidiaries

16 marketing offices in China

32 international logistics centers

2300 sales companies



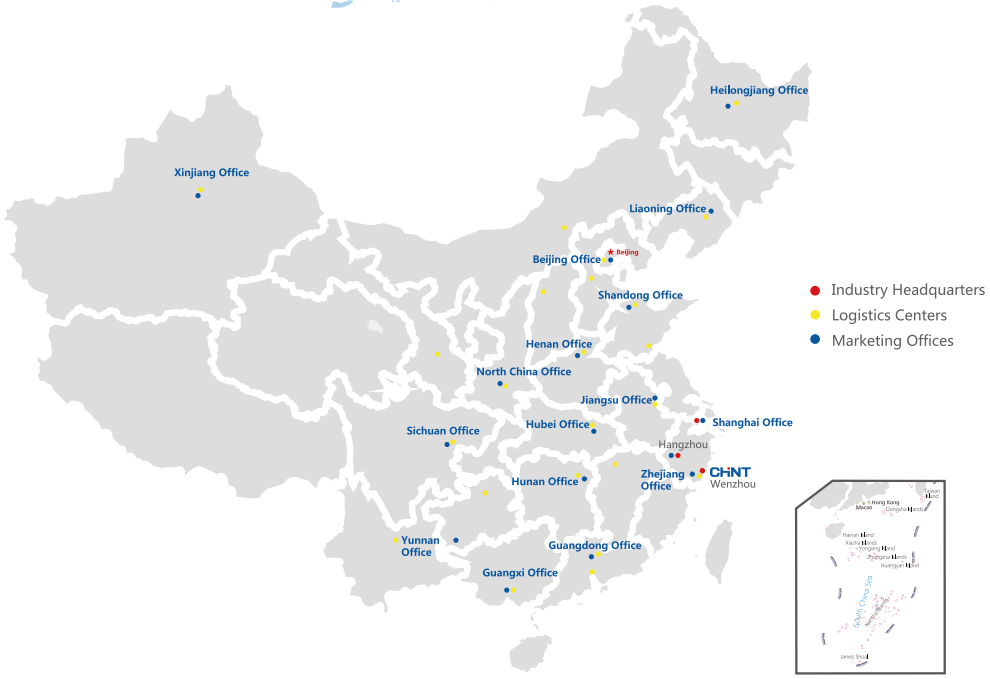

«Электро-Профи» - www.ep.ru

CHINT Honors

Comprehensive Strength

- 2015, top 100 enterprises in China machinery industry
- 2016, top 100 enterprises of Zhejiang Province
- 2017, ranking the 85th place among top 500 China private enterprises
- 2017, innovative leading enterprise of Zhejiang Province
- 2017, top 100 enterprises in innovation capacity among the national hi-tech enterprises of Zhejiang Province

Quality Management

- 2016, advanced unit and user-satisfied enterprise in national user satisfaction project
- 2016, executive director unit of Asia Quality Function Development Association
- 2017, quality good faith enterprise of China machinery industry
- 2017, national product and service quality good faith demonstration enterprise

Independent Innovation

- 2015, Science and Technology Award of China Electrotechnical Society
- 2016, Golden Patent Prize of Zhejiang Province and Patent Recognition Award of Zhejiang Province for two serial products
- 2016, national intellectual property demonstration enterprise
- 2016, group member of China Intellectual Property Society
- 2016, member of Global Energy Interconnection Development and Cooperation Organization

Social Responsibilities

- 2014, five-star enterprise of China industry sector in performing social responsibilities
- 2016, National Enterprise of Observing Contract and Valuing Credit
- 2017, credit management demonstration enterprise of Zhejiang Province
- 2018, the 10th "China Charity Award" of the Ministry of Civil Affairs

Qualification Certification

The products have been accredited through China Compulsory Certification (CCC) as well as UL of US, CE of EU, VDE and TÜV of Germany, EAC of Russia, KEMA of Netherlands, RCM of Australia, RCC of South Africa and other international product certifications.

CHINT ELECTRIC

Empower the World

Craftsmanship Forges High-quality Products

Craftsmanship Forges High-quality Products

CHINT Electrics, a core controlled company belonging to CHINT Group, it focuses on R&D, design, manufacturing and sales of low-voltage apparatus products and provides system solutions for building, power supply, hoisting, HVAC, telecommunication and other industrial customers. For over 30 years since its founding, CHINT has provided reliable products and services for over 140 countries and regions, and has become one of world famous low-voltage apparatus brand operators.

CHINT will continuously satisfy the increasing market demand through technical and innovative services advancing with the times, and will provide safer, more reliable products and create more secure and comfortable living environment.



«Электро-Профи» - www.ep.ru

CHINT KUNLUN SERIES

Air Circuit Breaker

- Built-in busbar temperature sensor ;
- Fine shell-frame division ;
- Man-machine interconnection ;
- Strong environmental adaptability.

Moulded Case Circuit Breaker

- Fine shell-frame division ;
- Line protection ;
- Double insulation ;
- Man-machine interconnection ;
- Strong environmental adaptability.

Terminal Distribution Apparatus

- Clear contact window ;
- Small size and high current ;
- More current specification options ;
- Abundant accessories ;
- Strong environmental adaptability.

Motor Control and Protection

- Suitable for large voltage fluctuation ;
- Humane design ;
- Fine current specification ;
- More standard auxiliary contacts ;
- Strong environmental adaptability.



«Электро-Профи» - www.ep.ru

CHINT ELECTRIC

Low Voltage

Master Catalogue

Modular DIN Rail Products	P-001~P-102	A
Moulded Case Circuit Breakers	P-001~P-092	B
Air Circuit Breaker	P-001~P-104	C
Contactors, Relays, Starters	P-001~P-158	D
Pushbuttons & Indicator Lights & Buzzers	P-001~P-050	E
Inverter & Soft-Starter	P-001~P-040	F
Relay	P-001~P-156	G
LV Capacitor	P-001~P-028	H
Low Voltage VT & AVR & CT & PT	P-001~P-060	I
Switch Disconnector, Fuse-switch Disconnector, Changeover Switch	P-001~P-056	J
Fuses, Travel Switches,Universal Change-over Switches, Connection Terminals	P-001~P-090	K

«Электро-Профи» - www.ep.ru

CHINT ELECTRIC | Next series

The NEXT Series

Master Catalogue

Modular DIN Rail Product	P-001~P-046	L
Moulded Case Circuit Breaker	P-001~P-086	M
Air Circuit Breaker	P-001~P-064	N
Motor Control & Protection	P-001~P-036	O
Series Automatic Transfer Switching Equipment	P-001~P-030	P
NVF5 Inverter	P-001~P-010	Q

«Электро-Профи» - www.ep.ru

Modular Din Rail Products

Perfect Reliable choice



«Электро-Профи» - www.ep.ru



«Электро-Профи» - www.ep.ru

CHINT ELECTRIC

Modular DIN Rail Products

MCB



NB1-63
In: 1~63A
Icn=6000A

Page P-001



NB1-63H
In: 1~63A
10000A

Page P-007



NB1-63DC
In: 1~63A
Icu=6000A

Page P-011



NB7
In: 63A

Page P-014



eB
In: 1~63A
Icn=3000A,
4500A

Page P-016



NB1-63G
In: 1~63A

Page P-019



NBH8
In: 1~40A
Icn=4500A,
6000A

Page P-024

MCCB



DZ158
In: 63A, 80A,
100A, 125A
Icu=6kA, 10kA

Page P-027

RCCB



NL1
Magnetic
type

Page P-030



NL210

Page P-032

RCBO



NB1L
Magnetic
type

Page P-034



NB3LE
Electronic
type

Page P-037



NB3LEU
Electronic
type

Page P-039



NB3LEG
Electronic
type

Page P-041



NBH8LE
Electronic
type

Page P-043



DZ158LE
Electronic
type

Page P-045



NB2LE
Electronic
type

Page P-048



NB310L
Magnetic
type

Page P-051

Accessories for MCB, RCBO



XF9
Auxiliary
contact

Page P-053



XF9J
Alarm auxiliary
contact

Page P-055



S9
Shunt
release

Page P-057



V9
Under-voltage
release

Page P-059



AX-1
Auxiliary
contact

Page P-061



AX-5
Auxiliary
contact

Page P-063



OUVR-1
Self-recovery
Protector

Page P-065



OUVR-2
Self-recovery
Protector

Page P-068

«Электро-Профи» - www.ep.ru

CHINT ELECTRIC

Modular DIN Rail Products

Switch Disconnector



NH2
In=32A, 63A, 100A, 125A

Page P-071



NH4
In=32A, 40A,63A, 80A,100A, 125A;

Page P-073

Change-over Switch



NZK1

Page P-075



NZK2

Page P-077

Surge Arrester



NU6-Ⅱ

Page P-079



NU6-Ⅲ

Page P-081

Pushbutton & Indicator



NP9
Pushbutton

Page P-084



ND9
Indicator light

Page P-085

Consumer Unit



NX8

Page P-086



NX2

Page P-088



NXW1

Page P-089

Wall Mounting Enclosure



NXW5

Page P-090

MCB shield



MCB shield

Page P-094

Busbar



CBB-2
Busbar

Page P-095

«Электро-Профи» - www.ep.ru

NB1 Miniature Circuit Breaker

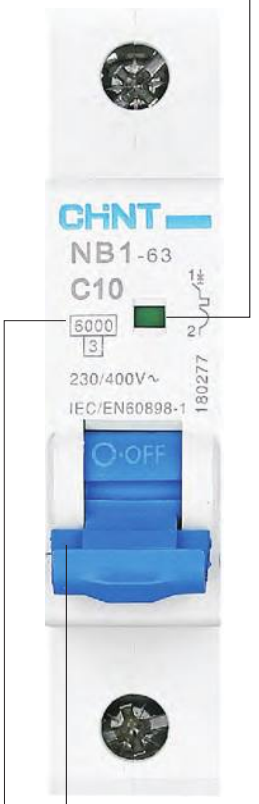

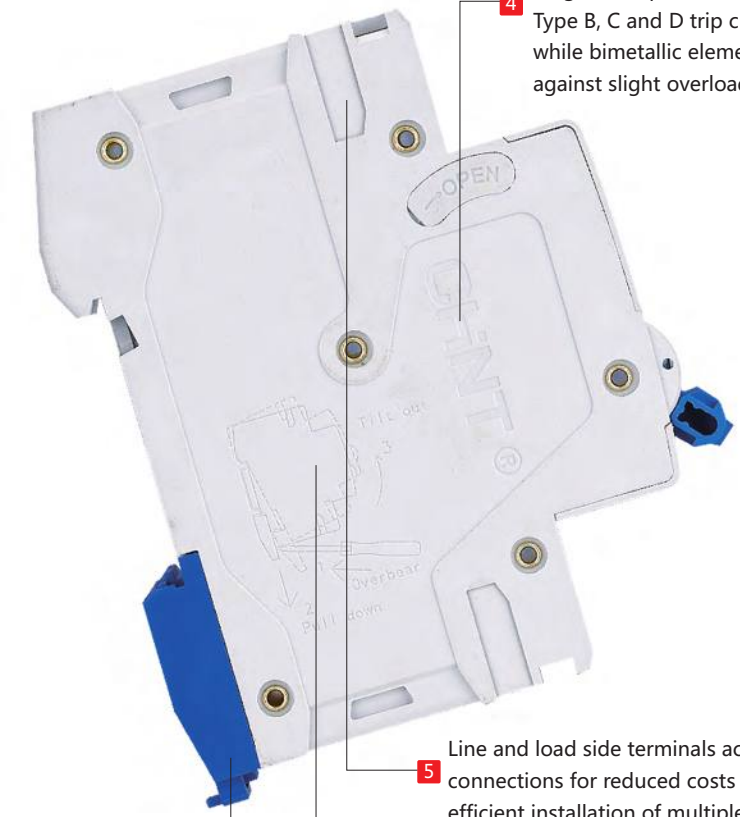

1 Color coded contact position indicator provides visual indication of the device status and insulation function

4 Magnetic trip elements provide Type B, C and D trip characteristics while bimetallic element protect against slight overload

5 Line and load side terminals accept bus bar connections for reduced costs and more efficient installation of multiple devices

2 Trip-free mechanism, device operation can not be defeated by holding the operator in the ON position

6 Heat dissipation gap provides better cooling

3 Breaking capacity up to 6000A

7 Extendable DIN-rail holder for easy installation

«Электро-Профи» - www.ep.ru

A



NB1 -63
Miniature Circuit Breaker

1. General

1.1 Function

protection of circuits against short-circuit currents,
protection of circuits against overload currents,
switch,isolation.
NB1 circuit-breakers are used in domestic installation, as well as in commercial and industry electrical distribution systems.

1.2 Selection

Technical data of the network at the point considered:
short-circuit current at the circuit-breaker installation point, which must always be less than the breaking capacity of this device,network normal voltage.
Tripping curves:

B curve (3-5In)

protection for people and big length cables in TN and IT systems.

C curve (5-10In)

protection for resistive and inductive loads with low inrush current.

D curve(10-14In)

protection for circuits which supply loads with high inrush current at the circuit closing
(LV/LV transformers, breakdown lamps).

1.3 Approvals and certificates

Detailed information, please refer to Certificates Table on the last page.

«Электро-Профи» - www.ep.ru

2. Technical data

2.1 Curves

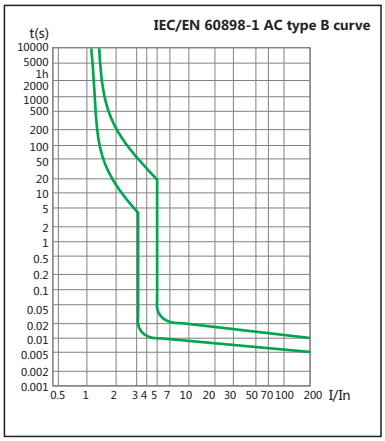

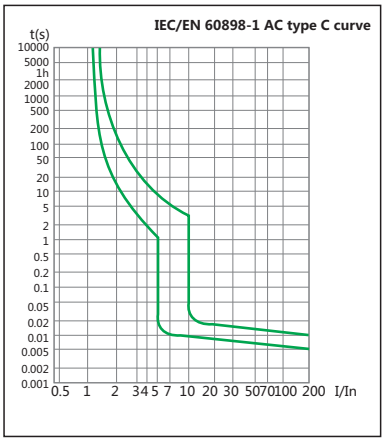

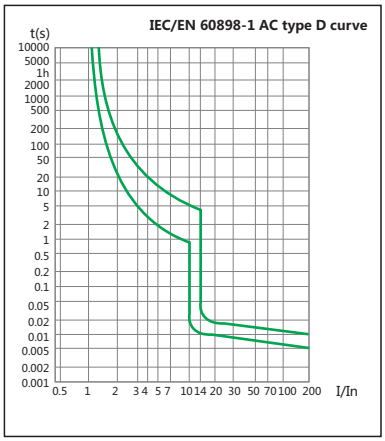

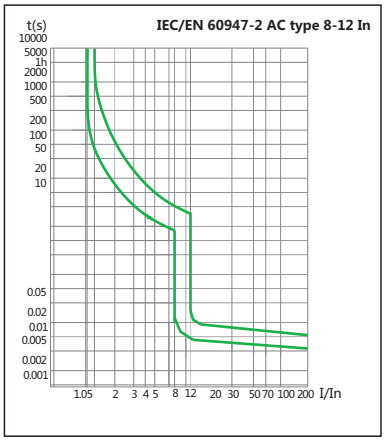

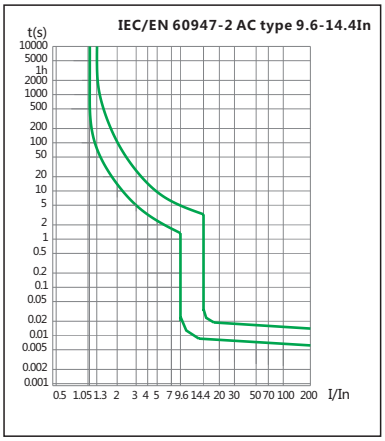

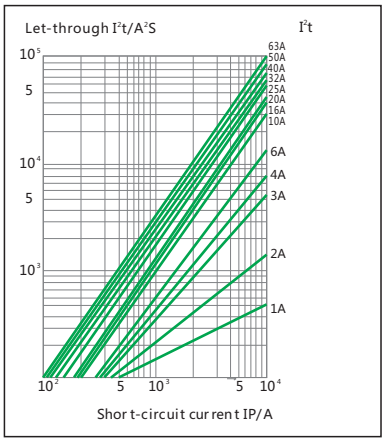

«Электро-Профи» - www.ep.ru

A

2.2

	Standard		IEC/EN 60898-1	IEC/EN 60947-2	UL1077	
Electrical features	Rated current In	A	1, 2, 3, 4, 6, 10, 13, 16, 20, 25, 32, 40, 50, 63		1, 2, 3, 4, 6, 10, 13, 16, 20, 25, 32, 40, 50, 63	
	Poles		1P, 1P+N, 2P, 3P, 3P+N, 4P	1P, 2P, 3P, 4P	1P, 2P, 3P, 4P	1P, 2P
	Rated voltage Ue	V	230/400~240/415		277/480	110/125
	Insulation voltage Ui	V	500			
	Rated frequency		50/60Hz			DC
	Rated breaking capacity	A	6000	6000	5000	10000
	Energy limiting class		3			
	Rated impulse withstand voltage(1.2/50) Uimp	V	4000			
	Dielectric test voltage at ind. Freq. for 1 min	kV	2	1.890	2	
	Pollution degree		2			
	Power loss per pole		Rated current (A)		Max power loss per pole (W)	
			1, 2, 3, 4, 6, 10		2	
			16, 20, 25, 32		3.5	
			40, 50, 63		5	
	Thermo-magnetic release characteristic		B, C, D	(8-12)In	B, C, D	
Mechanical features	Electrical life		4, 000			
	Mechanical life		20, 000			
	Contact position indicator		Yes			
	Protection degree		IP20			
	Reference temperature for setting of thermal element	℃	30			
	Ambient temperature (with daily average≤35℃)	℃	-25...+60			
	Storage temperation	℃	-25...+70			
Installation	Terminal connection type		Cable/U-type busbar/Pin-type busbar			
	Terminal size top/bottom for cable	mm^2	25			
		AWG	18-4			
	Terminal size top/bottom for busbar	mm^2	10			
		AWG	18-8			
	Tightening torque	N·m	2.0			
		In-lbs.	22			
	Mounting		On DIN rail EN 60715 (35mm) by means of fast clip device			
	Connection		From top and bottom			
Combination with accessories	Auxiliary contact		Yes			
	Shunt release		Yes			
	Under voltage release		Yes			
	Alarm contant		Yes			

«Электро-Профи» - www.ep.ru

2.3 Selectivity

	In (A)	Power supply side: RT36-00 (fuse)								
		20	25	36	50	63	80	100	125	160
		Is (kA)								
Load side: NB1-63, NB1-63H Curve B, C	⩽2	1.2	4	> 12	> 12	> 12	> 12	> 12	> 12	> 12
	3	0.7	1.2	3.8	5.3	6	6	6	6	6
	4	0.6	0.9	2.5	3.8	6	6	6	6	6
	6	0.5	0.8	1.9	2.5	4.5	5	6	6	6
	10		0.7	1.4	2.2	3.2	3.6	6	6	6
	16			1.2	1.8	2.6	3	5.6	6	6
	20				1.5	2.2	2.5	4.6	6	6
	25				1.3	2	2.2	4.1	5.5	6
	32					1.7	1.9	3.8	4.5	6
	40						1.7	3	4	5
	50						1.5	2.6	3.5	4.5
	63							2.4	3.3	4.5

	In (A)	Power supply side: NM8-100S/H/R								
		16	20	25	32	40	50	63	80	100
		Is (kA)								
Load side: NB1-63, NB1-63H Curve B, C	≤10	0.19	0.19	0.3	0.4	0.5	0.5	0.5	0.63	0.8
	16			0.3	0.4	0.5	0.5	0.5	0.63	0.8
	20					0.5	0.5	0.5	0.63	0.8
	25						0.5	0.5	0.63	0.8
	32							0.5	0.63	0.8
	40								0.63	0.8
	50									0.8
	63									

2.4 Backup protection

	In (A)	Power supply side: RT16 series						
		40	50	63	80	100	125	160
		Is (kA)						
Load side: NB1-63, NB1-63H Curve B, C	1~6	40	40	40	40	40	40	40
	8~10	40	40	40	40	40	40	40
	13	40	40	40	40	35	35	35
	16	40	40	40	40	30	30	30
	20	40	40	40	40	30	30	30
	25	40	40	40	40	30	30	30
	32	40	40	40	40	30	30	30
	40	40	40	40	40	30	30	30
	50	30	30	30	30	30	30	30
	63	20	20	20	20	15	15	15

	In (A)	Power supply side: NM8					
		NM8-125S	NM8-125H	NM8-125R	NM8-250S	NM8-250H	NM8-250R
		Is (kA)					
Load side: NB1-63, NB1-63H Curve B, C	1~6	15	18	18	15	15	15
	10~20	12	15	15	12	12	12
	32~40	12	15	15	12	12	12
	50~60	12	15	15	12	12	12

«Электро-Профи» - www.ep.ru

A

2.5 Temperature derating

The maximum permissible current in a circuit breaker depends on the ambient temperature where the circuit breaker is placed. Ambient temperature is the temperature inside the enclosure or switchboard in which the circuit breakers are installed.

The reference temperature is 30℃

Ambient temperature → / Rated current(A) ↓	-25	-15	-5	0	10	20	30	40	50	60
1	1.26	1.23	1.19	1.15	1.11	1.05	1	0.96	0.93	0.88
2	2.52	2.46	2.38	2.28	2.2	2.08	2	1.92	1.86	1.76
3	3.78	3.69	3.57	3.42	3.3	3.12	3	2.88	2.79	2.64
4	5.04	4.92	4.76	4.56	4.4	4.16	4	3.84	3.76	3.52
6	7.56	7.38	7.14	6.84	6.6	6.24	6	5.76	5.64	5.28
10	12.7	12.5	12	11.5	11.1	10.6	10	9.6	9.3	8.9
16	20.48	20	19.2	18.4	17.76	16.96	16	15.36	14.88	14.24
20	25.6	25	24	23	22.2	21.2	20	19.2	18.6	17.8
25	32	31.25	30	28.75	27.75	26.5	25	24	23.25	22.25
32	41.28	40	38.72	37.12	35.52	33.92	32	30.72	29.76	28.16
40	51.2	50	48	46.4	44.8	42.4	40	38.4	37.2	35.6
50	65.5	63	60.5	58	56	53	50	48	46.5	44
63	81.9	80.01	76.86	73.71	70.56	66.78	63	60.48	58.9	55.44

When several simultaneously operating circuit breakers are mounted side by side in a small enclosure, the temperature rise inside the enclosure causes a reduction in current rating.
You must then assign the rating (already derated if necessary according to ambient temperatuer) a downrating factor of 0.8.

3. Overall and mounting dimensions (mm)

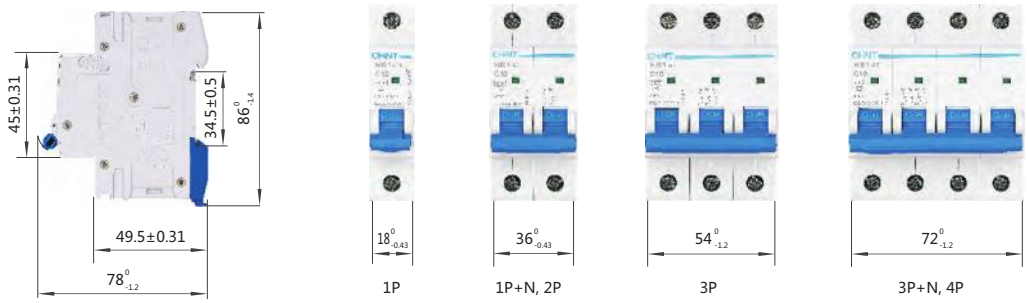

«Электро-Профи» - www.ep.ru



NB1-63H
Miniature Circuit Breaker

1. General

1.1 Function

protection of circuits against short-circuit currents,
protection of circuits against overload currents,
switch,isolation.
NB1-63H circuit-breakers are used in domestic installation, as well as in commercial and industry electrical distribution systems.

1.2 Selection

Technical data of the network at the point considered:
short-circuit current at the circuit-breaker installation point, which must always be less than the breaking capacity of this device,network normal voltage.
Tripping curves:

B curve (3-5In)
protection for people and big length cables in TN and IT systems.

C curve (5-10In)
protection for resistive and inductive loads with low inrush current.

D curve(10-14In)
protection for circuits which supply loads with high inrush current at the circuit closing
(LV/LV transformers, breakdown lamps).

2. Technical data

2.1 curves

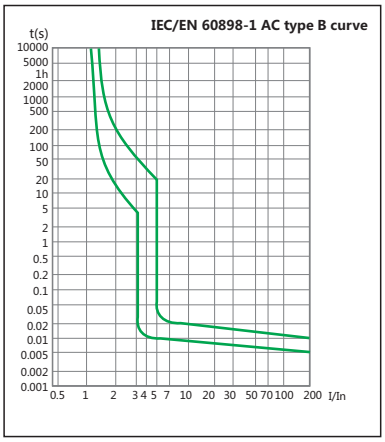

«Электро-Профи» - www.ep.ru

A

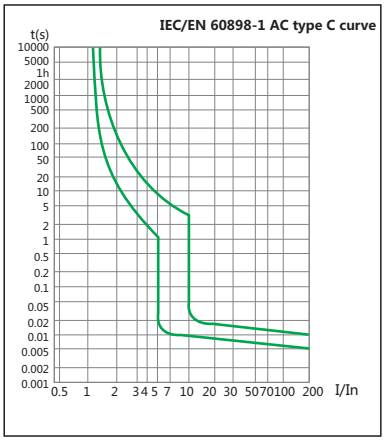

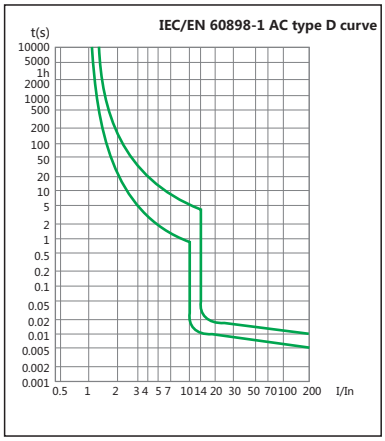

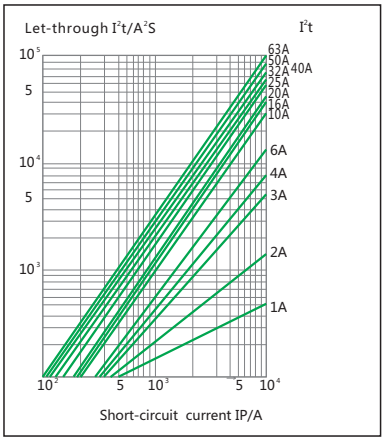

2.2

	Standard		IEC/EN 60898-1	
Electrical features	Rated current In	A	1, 2, 3, 4, 6, 10, 16,20, 25, 32, 40, 50, 63	
	Poles		1P, 1P+N, 2P, 3P, 3P+N, 4P	
	Rated voltage Ue	V	230/400~240/415	
	Insulation voltage Ui	V	500	
	Rated frequency		50/60Hz	
	Rated breaking capacity	A	10000	
	Energy limiting class		3	
	Rated impulse withstand voltage(1.2/50) Uimp	V	6000	
	Dielectric test voltage at ind. Freq. for 1 min	kV	2	
	Pollution degree		2	
	Power loss per pole		Rated current (A)	Max power loss per pole (W)
			1, 2, 3, 4, 5, 6, 10	2
			13, 16, 20, 25, 32	3.5
			40, 50, 63	5
	Thermo-magnetic release characteristic		B, C, D	
Mechanical features	Electrical life		4, 000	
	Mechanical life		20, 000	
	Contact position indicator		Yes	
	Protection degree		IP20	
	Reference temperature for setting of thermal element	℃	30	
	Ambient temperature (with daily average≤35℃)	℃	-25...+60(Special application please refer to P10 for temperature compensation correction)	
	Storage temperation	℃	-25...+70	
Installation	Terminal connection type		Cable/U-type busbar/Pin-type busbar	
	Terminal size top/bottom for cable	mm^2	25	
		AWG	18-4	
	Terminal size top/bottom for busbar	mm^2	10	
		AWG	18-8	
	Tightening torque	N·m	2.0	
		In-lbs.	22	
	Mounting		On DIN rail EN 60715 (35mm) by means of fast clip device	
	Connection		From top and bottom	
Combination with accessories	Auxiliary contact		Yes	
	Shunt release		Yes	
	Under voltage release		Yes	
	Alarm contant		Yes	

«Электро-Профи» - www.ep.ru

2.3 Selectivity

	In (A)	Power supply side: RT36-00 (fuse)								
		20	25	36	50	63	80	100	125	160
		Is (kA)								
Load side: NB1-63, NB1-63H Curve B, C	≤2	1.2	4	> 12	> 12	> 12	> 12	> 12	> 12	> 12
	3	0.7	1.2	3.8	5.3	6	6	6	6	6
	4	0.6	0.9	2.5	3.8	6	6	6	6	6
	6	0.5	0.8	1.9	2.5	4.5	5	6	6	6
	10		0.7	1.4	2.2	3.2	3.6	6	6	6
	16			1.2	1.8	2.6	3	5.6	6	6
	20				1.5	2.2	2.5	4.6	6	6
	25				1.3	2	2.2	4.1	5.5	6
	32					1.7	1.9	3.8	4.5	6
	40						1.7	3	4	5
	50						1.5	2.6	3.5	4.5
	63							2.4	3.3	4.5

	In (A)	Power supply side: NM8-100S/H/R								
		16	20	25	32	40	50	63	80	100
		Is (kA)								
Load side: NB1-63, NB1-63H Curve B, C	≤10	0.19	0.19	0.3	0.4	0.5	0.5	0.5	0.63	0.8
	16			0.3	0.4	0.5	0.5	0.5	0.63	0.8
	20					0.5	0.5	0.5	0.63	0.8
	25						0.5	0.5	0.63	0.8
	32							0.5	0.63	0.8
	40								0.63	0.8
	50									0.8
	63									

2.4 Backup protection

	In (A)	Power supply side: RT16 series						
		40	50	63	80	100	125	160
		Is (kA)						
Load side: NB1-63, NB1-63H Curve B, C	1~6	40	40	40	40	40	40	40
	8~10	40	40	40	40	40	40	40
	13	40	40	40	40	35	35	35
	16	40	40	40	40	30	30	30
	20	40	40	40	40	30	30	30
	25	40	40	40	40	30	30	30
	32	40	40	40	40	30	30	30
	40	40	40	40	40	30	30	30
	50	30	30	30	30	30	30	30
	63	20	20	20	20	15	15	15

	In (A)	Power supply side: NM8					
		NM8-125S	NM8-125H	NM8-125R	NM8-250S	NM8-250H	NM8-250R
		Is (kA)					
Load side: NB1-63, NB1-63H Curve B, C	1~6	15	18	18	15	15	15
	10~20	12	15	15	12	12	12
	32~40	12	15	15	12	12	12
	50~60	12	15	15	12	12	12

«Электро-Профи» - www.ep.ru

A

2.5 Temperature derating

The maximum permissible current in a circuit breaker depends on the ambient temperature where the circuit breaker is placed. Ambient temperature is the temperature inside the enclosure or switchboard in which the circuit breakers are installed.

The reference temperature is 30℃

Ambient temperature → / Rated current(A) ↓	-25	-15	-5	0	10	20	30	40	50	60
1	1.26	1.23	1.19	1.15	1.11	1.05	1	0.96	0.93	0.88
2	2.52	2.46	2.38	2.28	2.2	2.08	2	1.92	1.86	1.76
3	3.78	3.69	3.57	3.42	3.3	3.12	3	2.88	2.79	2.64
4	5.04	4.92	4.76	4.56	4.4	4.16	4	3.84	3.76	3.52
6	7.56	7.38	7.14	6.84	6.6	6.24	6	5.76	5.64	5.28
10	12.7	12.5	12	11.5	11.1	10.6	10	9.6	9.3	8.9
16	20.48	20	19.2	18.4	17.76	16.96	16	15.36	14.88	14.24
20	25.6	25	24	23	22.2	21.2	20	19.2	18.6	17.8
25	32	31.25	30	28.75	27.75	26.5	25	24	23.25	22.25
32	41.28	40	38.72	37.12	35.52	33.92	32	30.72	29.76	28.16
40	51.2	50	48	46.4	44.8	42.4	40	38.4	37.2	35.6
50	65.5	63	60.5	58	56	53	50	48	46.5	44
63	81.9	80.01	76.86	73.71	70.56	66.78	63	60.48	58.9	55.44

When several simultaneously operating circuit breakers are mounted side by side in a small enclosure, the temperature rise inside the enclosure causes a reduction in current rating.
You must then assign the rating (already derated if necessary according to ambient temperatuer) a downrating factor of 0.8.

3. Overall and mounting dimensions (mm)



«Электро-Профи» - www.ep.ru



NB1-63DC
DC Circuit Breaker

1. General

1.1 Certificates: CCC,CE,CB,TUV;

1.2 Standard: IEC/EN 60947-2 ,RoHS;

1.3 Rated voltage up to 1000V, Rated current up to 63A;

1.4 Protection of circuits against overload currents;

1.5 Protection of circuits against short-circuit currents;

1.6 NB1-63 DC circuit-breakers are used in communication systems and PV DC systems.

2. Features

2.1 Excellent breaking capacity

2.2 Double connection function of lead wire and bus bar

2.3 Stored energy operation, fast closing, long service life

2.4 Convenient installation, disassembly

2.5 Contact on-off indication, higher security

2.6 Green environmental protection and energy saving

3. Type designation

N B 1 - 63 DC

- DC — Direct Current
- 63 — Frame size rated current
- 1 — Designed sequence number
- B — MCB
- N — Company code

4. Operating conditions

4.1 Ambient temperature:-35℃~+70℃(Refer to 5.3)

4.2 The atmosphere condition:≤95%

4.3 Pollution degree:Ⅱ

4.4 Altitude:≤2000m(if exceed 2000m,Refer to 5.4)

5. Technical data

5.1 Classification

5.1.1 Rate Current In:
1A,2A,3A,4A,6A,10A,13A,16A,20A,25A,32A,40A,50A,63A

5.1.2 Number of poles: 1P,2P,4P

5.1.3 Tripping curves: C Type,(7~10)In

5.2 Parameters

5.2.1 Rated breaking capacity Icu

«Электро-Профи» - www.ep.ru

A

Rated current In (A)	Number of poles	Rated voltage Ue (V)	Rated breaking capacity Icu (A)
1~63	1	250	6000
	2	500	6000
	4	1000	6000

5.2.2 Electrical and mechancial life

a. Electrical life: > 1500

b. Mechancial life: > 20,000

5.2.3 Rated impulse withstand voltage Uimp:4KV

5.2.4 (28-32)℃ ambient temperature over-current protection features.

Test	Test current	Initial state	Time limit for tripping or not tripping	Expected result	Remarks
a	1.05In	Cold state	t≤1h	Not tripping	
b	1.30In	Right after test number a	t < 1h	Tripping	The current is rising within 5s
c	7In	Cold state	t≤0.2s	Not tripping	
d	10In	Cold state	t < 0.1s	Tripping	

Note: The terminology" Cold state" means that the test is performed at the base calibration temperature with no load prior to the test.

5.3 Temperature derating

Rated current (A)	Temperature compensation coefficient under various operational temperature.											
	-35℃	-30℃	-20℃	-10℃	0℃	10℃	20℃	30℃	40℃	50℃	60℃	70℃
1	1.3	1.26	1.23	1.19	1.15	1.11	1.05	1	0.96	0.93	0.88	0.83
2	2.6	2.52	2.46	2.38	2.28	2.2	2.08	2	1.92	1.86	1.76	1.66
3	3.9	3.78	3.69	3.57	3.42	3.3	3.12	3	2.88	2.79	2.64	2.49
4	5.2	5.04	4.92	4.76	4.56	4.4	4.16	4	3.84	3.76	3.52	3.32
6	7.8	7.56	7.38	7.14	6.84	6.6	6.24	6	5.76	5.64	5.28	4.98
10	13.2	12.7	12.5	12	11.5	11.1	10.6	10	9.6	9.3	8.9	8.4
13	17.16	16.51	16.25	15.6	14.95	14.43	13.78	13	12.48	12.09	11.57	10.92
16	21.12	20.48	20	19.2	18.4	17.76	16.96	16	15.36	14.88	14.24	13.44
20	26.4	25.6	25	24	23	22.2	21.2	20	19.2	18.6	17.8	16.8
25	33	32	31.25	30	28.75	27.75	26.5	25	24	23.25	22.25	21
32	42.56	41.28	40	38.72	37.12	35.52	33.93	32	30.72	29.76	28.16	26.88
40	53.2	51.2	50	48	46.4	44.8	42.4	40	38.4	37.2	35.6	33.6
50	67	65.5	63	60.5	58	56	53	50	48	46.5	44	41.5
63	83.79	81.9	80.01	76.86	73.71	70.56	66.78	63	60.48	58.9	55.44	52.29

5.4 Altitude derating

Tripping type	Rated current In (A)	Current correction factor			For example
		≤2000	2000~3000m	≥3000m	
C	1,2,3,4,6,10, 13,16,20,32, 40,50,63	1	0.9	0.8	Rated current of 10A products rated current derating 2500m:0.9×10=9A

«Электро-Профи» - www.ep.ru

5.5 Curves shown in Figure 1

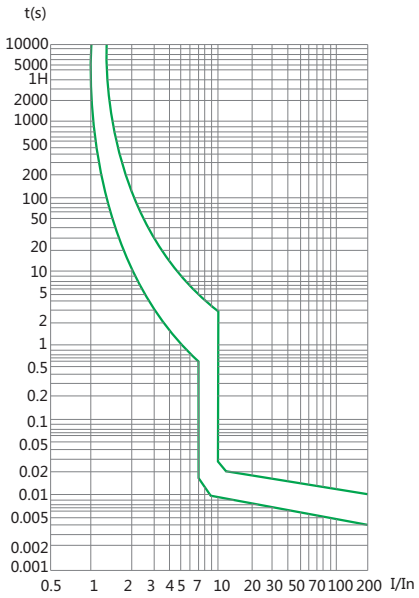

5.6 Wiring: Apply to 25 mm^2 wire connection terminals
Tightening torque 2.5N·m

Rated current In (A)	Copper wire nominal cross sectional area(mm^2)
1~6	1
10	1.5
13,16,20	2.5
25	4
32	6
40,50	10
63	16

5.7 Each pole power consumption of the circuit breaker

Rated current In (A)	Each pole maximum power consumption(W)
1~10	2
13~32	3.5
40~63	5

5.8 DC application wiring diagram shown in Figure 2

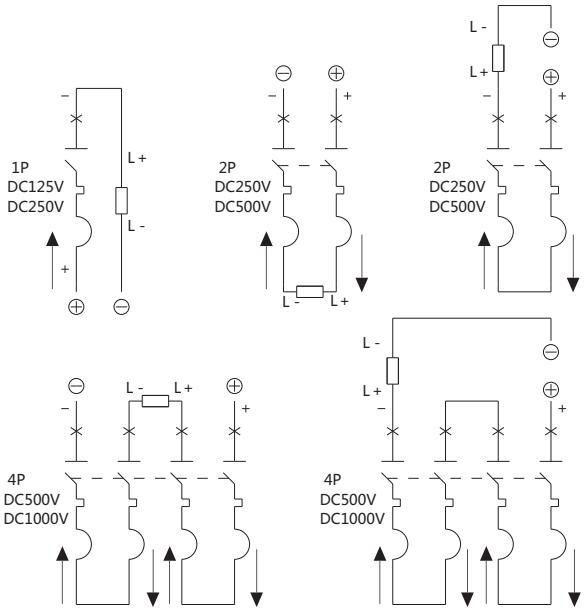

Wiring diagram description:

1. ⊕ Positive ⊖ Negative
2. L+ Load positive L- Load negative
3. Prohibit power reversed
4. Rated voltage: 1P:250V, 2P:500V, 4P:1000V
5. Strictly forbidden to remove the four poles products of sealing plug wiring operation.

6. Overall and mounting dimensions (mm)

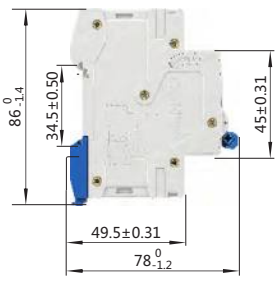

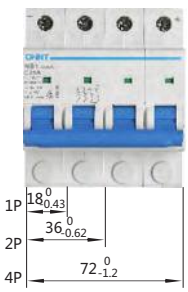



A



NB7
Miniature Circuit Breaker

1. General

The NB7 series miniature circuit breaker is applicable to the circuit with an alternating current of 50Hz/60Hz, rated voltage of 240/415V, and rated current up to 63A for overload protection and short circuit protection, and also for not-frequent operational transformation in the circuit under normal condition.
This product can be applied to various places such as industrial, commercial, and tall buildings, and residential houses.
The product meets the standards of IEC60898-1.

2. Type designation

N B 7

- 7 — Design number
- B — Miniature circuit breaker
- N — Company code

3. Technical data

3.1 Main specifications

3.1.1 Graded according to the rated current In: 1A, 2A, 3A, 4A, 6A, 10A, 16A, 20A, 25A, 32A, 40A, 50A, 63A;

3.1.2 Classified as follows according to the type of instantaneous release: type B (3-5)In, type C (5-10)In, type D ((10-16)In;

3.1.3 Categorized as follows according to the number of poles:
a. Single pole
b. Two poles
c. Three poles
d. Four poles

3.2 Technical parameters

3.2.1 For the rated short circuit breaking capacity, see Table 1

Table 1

Rated current In (A)	Number of poles	Rated voltage Ue (V)	Rated short circuit capacity Icn (A)
B, C type: 1~40	1	240/415	6000
	2, 3, 4	415	
B, C type: 50 63	1	240/415	4500
	2, 3, 4	415	
D type: 1~63	1	240/415	
	2, 3, 4	415	

3.2.2 Mechanical/electrical Life
a. Electrical life: not less than 4,000 times
b. Mechanical life: not less than 10,000 times

3.2.3 For the over current protection characteristics, see Table 2

Table 2

Test	Type	Test current	Initial state	Time limit for tripping or not tripping	Expected result	Test environment temperature	Remarks
a	B, C, D	1.13 In	Cold state	t≤1h	Not tripping	30℃~35℃	The current is rising within 5s
b	B, C, D	1.45 In	Right after test number 1	t < 1h	Tripping		
c	B, C, D	2.55 In	Cold state	1s < t < 60s (In≤32A) 1s < t < 120s (In > 32A)	Tripping		
d	B	3In	Cold state	t≤0.1s	Not tripping		The power supply is turned on by closing the auxiliary switch
	C	5In					
	D	10In					
e	B	5In	Cold state	t < 0.1s	Tripping		The power supply is turned on by closing the auxiliary switch
	C	10In					
	D	16In					

Note: The terminology "Cold state" means that the test is performed at the base calibration temperature with no load prior to the test.

«Электро-Профи» - www.ep.ru

3.2.4 For the tripping performance diagram, see Fig 1

B Type

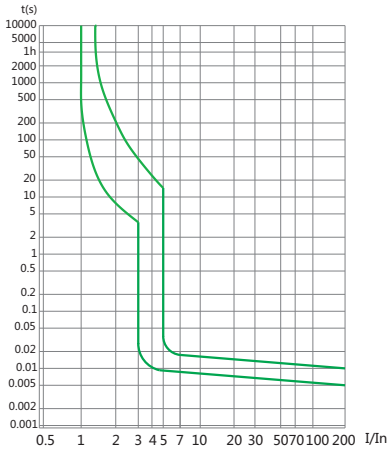

C Type

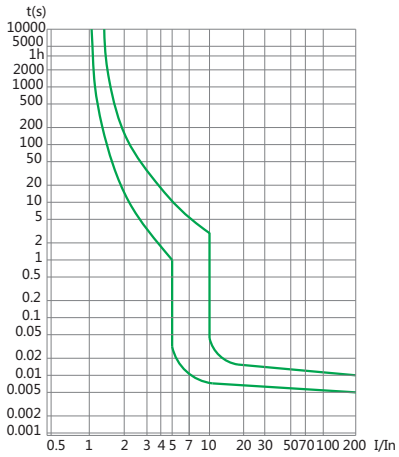

D Type

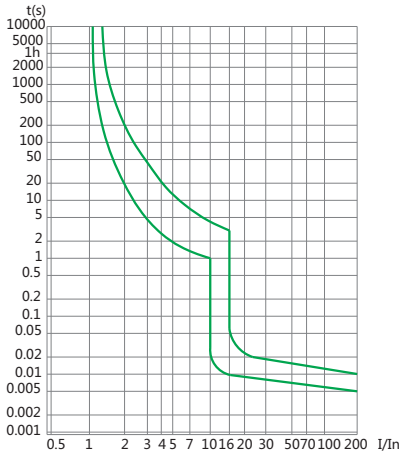

3.2.5 Wiring: good for connection of leads of less than 25mm^2 (see Table 3); wiring method: screw hold-down with a toque of 2N·m

Rated current In (A)	Nominal cross-sectional area of the copper conductor (mm^2)
1~6	1
10	1.5
16,20	2.5
25	4
32	6
40,50	10
63	16

4. Overall and mounting dimensions (mm)

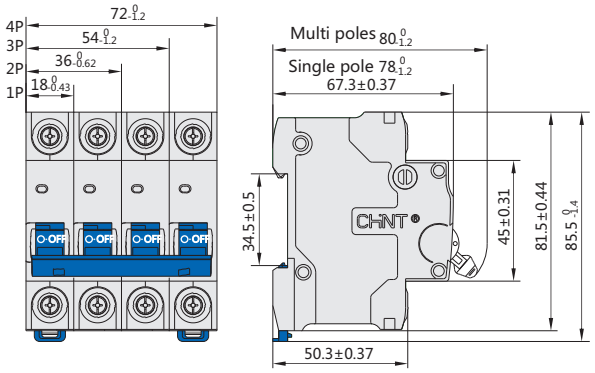

5. Ordering information

5.1 When ordering the goods, the user shall indicate the following items:

5.1.1 Types and names of products, for example, NB7 miniature circuit breaker;

5.1.2 Instantaneous tripping type and rated current, for example, C25;

5.1.3 Number of poles: for example, 2P;

5.1.4 Amount on order, for example, 50 units;

5.2 Example for ordering: 50 units of the NB7 series miniature circuit breakers, 2P, C25.

«Электро-Профи» - www.ep.ru

A



eBC eB eBG
Miniature Circuit Breaker

1. General

1.1 Function

protection of circuits against short-circuit currents,
protection of circuits against overload currents,
switch,isolation.

1.2 Selection

Technical data of the network at the point considered:
the earthing systems (TNS, TNC),
short-circuit current at the circuit-breaker installation point, which must always be less than the breaking capacity of this device,network normal voltage.
Tripping curves:

B curve (3-5In)

protection for people and big length cables in TN and IT systems.

C curve (5-10In)

protection for resistive and inductive loads with low inrush current.

D curve(10-20In)

protection for circuits which supply loads with high inrush current at the circuit closing
(LV/LV transformers, breakdown lamps).

1.3 Approvals and certificates

Detailed information, please refer to Certificates Table on the last page.

«Электро-Профи» - www.ep.ru

2. Technical data

2.1 Curves

CBC CB CBG is of high current limiting performance to limit the destruction energy due to short circuit to the greatest extent.

IEC/EN 60898-1 AC type B curve

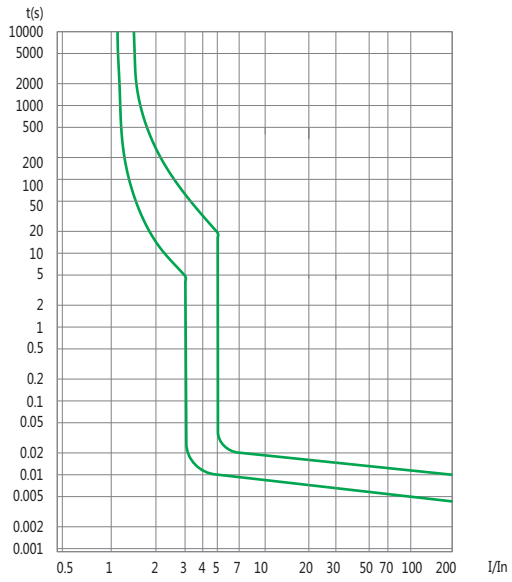

IEC/EN 60898-1 AC type C curve

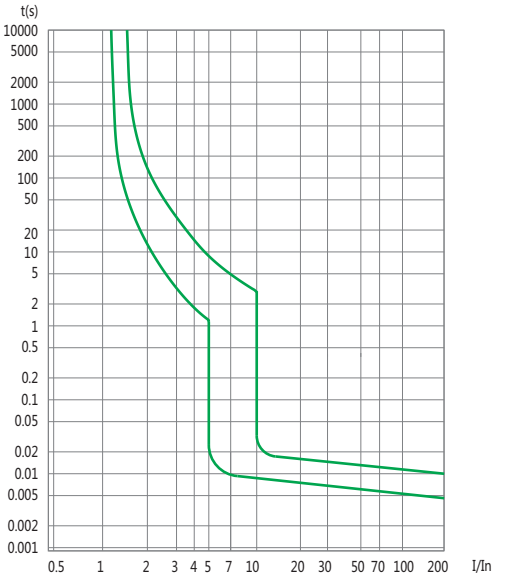

IEC/EN 60898-1 AC type D curve

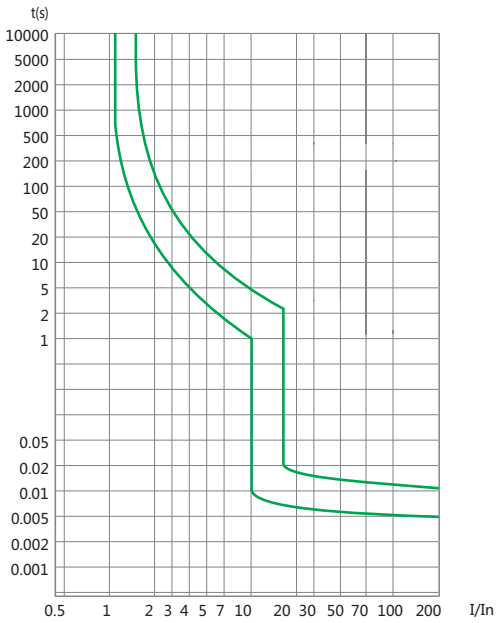

IEC/EN 60947-2 AC type 8-12 In

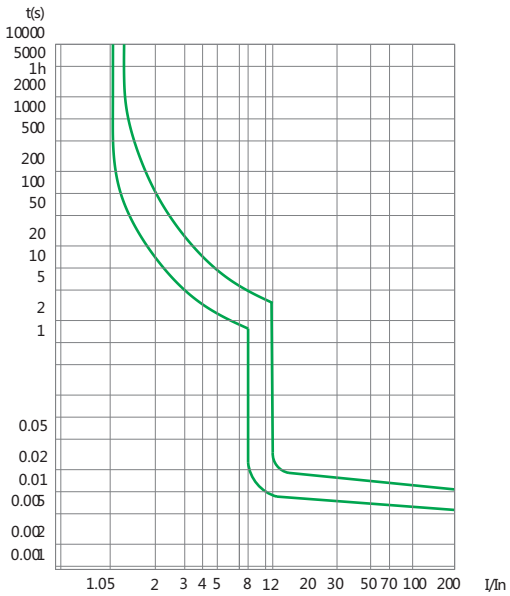

«Электро-Профи» - www.ep.ru

A

2.2

	Standard		IEC/EN 60898-1	IEC/EN 60947-2
Electrical features	Rated current In	A	1, 2, 3, 4, 5, 6, 10, 15, 16, 20, 25, 32, 40, 50, 60, 63	
	Poles		1P, 2P, 3P, 4P	
	Rated voltage Ue	V	230/400~240/415	
	Insulation voltage Ui		500	
	Rated frequency	Hz	50/60	
	Rated breaking capacity	kA	3 (1~63A) eBC 4.5 (1~63A) eB 6 (B,C 1~40A) eBG	
	Rated impulse withstand voltage(1.2/50) Uimp	V	4000	
	Dielectric test voltage at ind. Freq. for 1 min		2	
	Pollution degree		2	
	Thermo-magnetic release characteristic		B, C, D	8-12In
Mechanical features	Electrical life		4, 000	
	Mechanical life		10, 000	
	Protection degree		IP20	
	Reference temperature for setting of thermal element	℃	30	
	Ambient temperature (with daily average≤35℃)	℃	-5...+40	
	Storage temperation	℃	-25...+70	
Installation	Terminal connection type		Cable/Pin-type busbar	
	Terminal size top/bottom for cable	mm^2	1~25	
		AWG	17~3	
	Terminal size top/bottom for busbar	mm^2	1~10	
		AWG	17~7	
	Tightening torque	N·m	2	
		In-lbs.	18	
	Mounting		On DIN rail EN 60715 (35mm) by means of fast clip device	
	Connection		From top and bottom	

2.3 Temperature derating

The maximum permissible current in a circuit breaker depends on the ambient temperature where the circuit breaker is placed. Ambient temperature is the temperature inside the enclosure or switchboard in which the circuit breakers are installed.

The reference temperature is 30℃

Rated current In (A)	Temperature compensation coefficient under various operational temperature								
	-10℃	0℃	10℃	20℃	30℃	40℃	50℃	55℃	60℃
1~6	1.20	1.14	1.09	1.05	1.00	0.96	0.80	0.75	0.70
10~32	1.18	1.12	1.08	1.04	1.00	0.96	0.92	0.88	0.84
40~60	1.16	1.12	1.07	1.03	1.00	0.97	0.87	0.83	0.80

3. Overall and mounting dimensions (mm)

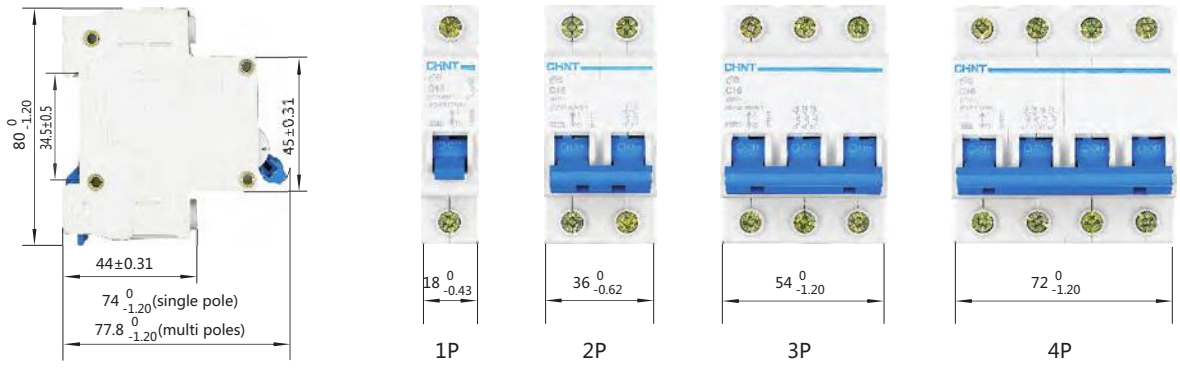

«Электро-Профи» - www.ep.ru

NB1-63G Miniature Circuit Breaker

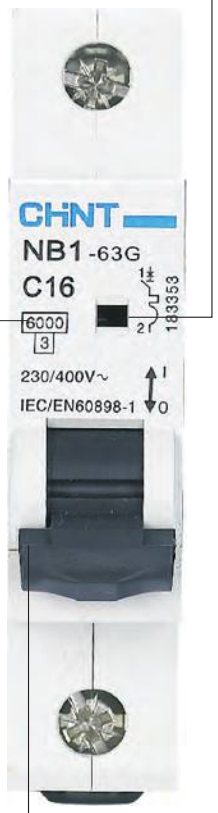



1 Color coded contact position indicator provides visual indication of the device status and insulation function

2 Trip-free mechanism, device operation can not be defeated by holding the operator in the ON position

3 Breaking capacity up to 6000A

4 Magnetic trip elements provide Type B and C trip characteristics while bimetallic element protect against slight overload

5 Line and load side terminals accept bus bar connections for reduced costs and more efficient installation of multiple devices

6 Heat dissipation gap provides better cooling

7 Extendable DIN-rail holder for easy installation

«Электро-Профи» - www.ep.ru

A



NB1-63G Miniature Circuit Breaker

1. General

1.1 Function

protection of circuits against short-circuit currents, protection of circuits against overload currents, switch,isolation.

NB1-63G circuit-breakers are used in domestic installation, as well as in commercial and industry electrical distribution systems.

1.2 Selection

Technical data of the network at the point considered: short-circuit current at the circuit-breaker installation point, which must always be less than the breaking capacity of this device,network normal voltage.

Tripping curves:

B curve (3-5In)

protection for people and big length cables in TN and IT systems.

C curve (5-10In)

protection for resistive and inductive loads with low inrush current.

«Электро-Профи» - www.ep.ru

2. Technical data

2.1 Curves

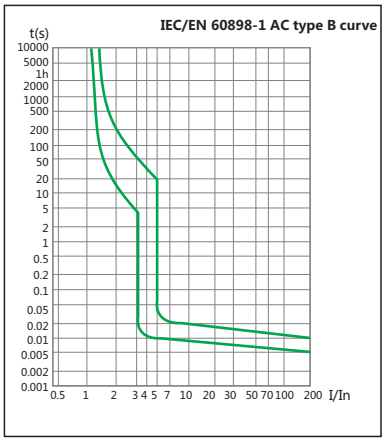

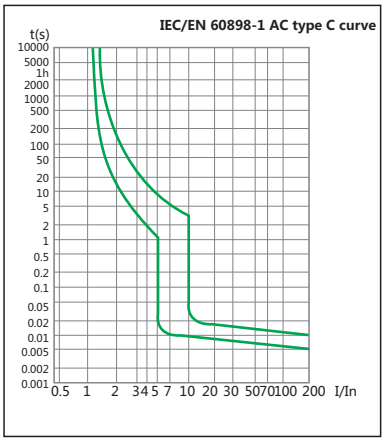

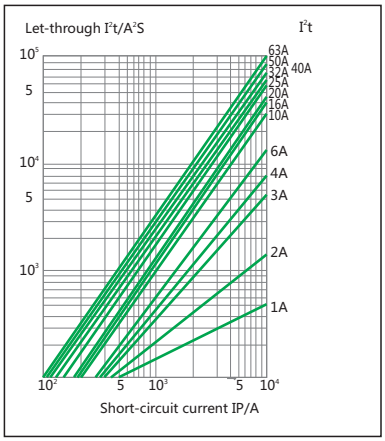

2.2

	Standard		IEC/EN 60898-1	
Electrical features	Rated current In	A	1, 2, 3, 4, 6, 10, 13, 16, 20, 25, 32, 40, 50, 63	
	Poles		1P, 2P, 3P, 4P	
	Rated voltage Ue	V	230/400	
	Insulation voltage Ui	V	500	
	Rated frequency		50/60Hz	
	Rated breaking capacity	A	6000	
	Energy limiting class		3	
	Rated impulse withstand voltage(1.2/50) Uimp	V	4000	
	Dielectric test voltage at ind. Freq. for 1 min	kV	2	
	Pollution degree		2	
	Power loss per pole		Rated current (A)	Max power loss per pole (W)
			1, 2, 3, 4, 6, 10	2
			16, 20, 25, 32	3.5
			40, 50, 63	5
	Thermo-magnetic release characteristic		B, C	
Mechanical features	Electrical life		4, 000	
	Mechanical life		20, 000	
	Contact position indicator		Yes	
	Protection degree		IP20	
	Reference temperature for setting of thermal element	℃	30	
	Ambient temperature (with daily average≤35℃)	℃	-25...+60	
	Storage temperation	℃	-25...+70	
Installation	Terminal connection type		Cable/U-type busbar/Pin-type busbar	
	Terminal size top/bottom for cable	mm^2	25	
		AWG	18-4	
	Terminal size top/bottom for busbar	mm^2	10	
		AWG	18-8	
	Tightening torque	N·m	2.0	
		In-lbs.	22	
	Mounting		On DIN rail EN 60715 (35mm) by means of fast clip device	
	Connection		From top and bottom	
Combination with accessories	Auxiliary contact		Yes	
	Shunt release		Yes	
	Under voltage release		Yes	
	Alarm contant		Yes	

«Электро-Профи» - www.ep.ru

A

2.3 Selectivity

	In (A)	Power supply side: RT36-00 (fuse)								
		20	25	36	50	63	80	100	125	160
		Is (kA)								
Load side: NB1-63G	≤2	1.2	4	> 12	> 12	> 12	> 12	> 12	> 12	> 12
	3	0.7	1.2	3.8	5.3	6	6	6	6	6
	4	0.6	0.9	2.5	3.8	6	6	6	6	6
	6	0.5	0.8	1.9	2.5	4.5	5	6	6	6
	10		0.7	1.4	2.2	3.2	3.6	6	6	6
	16			1.2	1.8	2.6	3	5.6	6	6
	20				1.5	2.2	2.5	4.6	6	6
	25				1.3	2	2.2	4.1	5.5	6
	32					1.7	1.9	3.8	4.5	6
	40						1.7	3	4	5
	50						1.5	2.6	3.5	4.5
	63							2.4	3.3	4.5

	In (A)	Power supply side: NM8-100S/H/R								
		16	20	25	32	40	50	63	80	100
		Is (kA)								
Load side: NB1-63G	≤10	0.19	0.19	0.3	0.4	0.5	0.5	0.5	0.63	0.8
	16			0.3	0.4	0.5	0.5	0.5	0.63	0.8
	20					0.5	0.5	0.5	0.63	0.8
	25						0.5	0.5	0.63	0.8
	32							0.5	0.63	0.8
	40								0.63	0.8
	50									0.8
	63									

2.4 Backup protection

	In (A)	Power supply side: RT16 series						
		40	50	63	80	100	125	160
		Is (kA)						
Load side: NB1-63G	1~6	40	40	40	40	40	40	40
	8~10	40	40	40	40	40	40	40
	13	40	40	40	40	35	35	35
	16	40	40	40	40	30	30	30
	20	40	40	40	40	30	30	30
	25	40	40	40	40	30	30	30
	32	40	40	40	40	30	30	30
	40	40	40	40	40	30	30	30
	50	30	30	30	30	30	30	30
	63	20	20	20	20	15	15	15

	In (A)	Power supply side: NM8					
		NM8-125S	NM8-125H	NM8-125R	NM8-250S	NM8-250H	NM8-250R
		Is (kA)					
Load side: NB1-63G	1~6	15	18	18	15	15	15
	10~20	12	15	15	12	12	12
	32~40	12	15	15	12	12	12
	50~60	12	15	15	12	12	12

«Электро-Профи» - www.ep.ru

2.5 Temperature derating

The maximum permissible current in a circuit breaker depends on the ambient temperature where the circuit breaker is placed. Ambient temperature is the temperature inside the enclosure or switchboard in which the circuit breakers are installed.

The reference temperature is 30℃

Ambient temperature / Rated current(A)	-25	-15	-5	0	10	20	30	40	50	60
1	1.26	1.23	1.19	1.15	1.11	1.05	1	0.96	0.93	0.88
2	2.52	2.46	2.38	2.28	2.2	2.08	2	1.92	1.86	1.76
3	3.78	3.69	3.57	3.42	3.3	3.12	3	2.88	2.79	2.64
4	5.04	4.92	4.76	4.56	4.4	4.16	4	3.84	3.76	3.52
6	7.56	7.38	7.14	6.84	6.6	6.24	6	5.76	5.64	5.28
10	12.7	12.5	12	11.5	11.1	10.6	10	9.6	9.3	8.9
16	20.48	20	19.2	18.4	17.76	16.96	16	15.36	14.88	14.24
20	25.6	25	24	23	22.2	21.2	20	19.2	18.6	17.8
25	32	31.25	30	28.75	27.75	26.5	25	24	23.25	22.25
32	41.28	40	38.72	37.12	35.52	33.92	32	30.72	29.76	28.16
40	51.2	50	48	46.4	44.8	42.4	40	38.4	37.2	35.6
50	65.5	63	60.5	58	56	53	50	48	46.5	44
63	81.9	80.01	76.86	73.71	70.56	66.78	63	60.48	58.9	55.44

When several simultaneously operating circuit breakers are mounted side by side in a small enclosure, the temperature rise inside the enclosure causes a reduction in current rating.
You must then assign the rating (already derated if necessary according to ambient temperatuer) a downrating factor of 0.8.

3. Overall and mounting dimensions (mm)

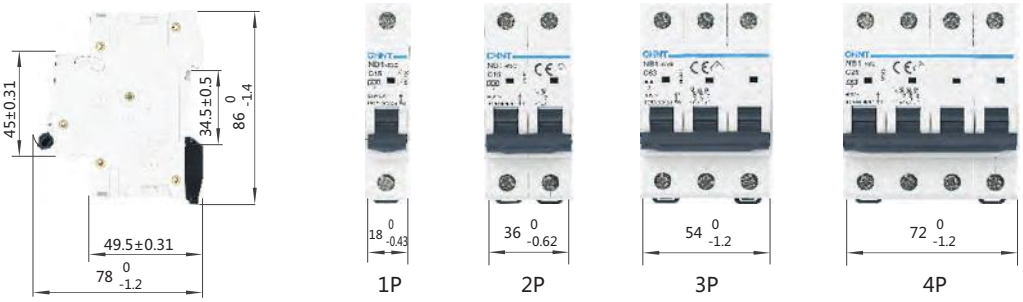

«Электро-Профи» - www.ep.ru

A



NBH8 Miniature Circuit Breaker

1. General

1.1 Function

protection of circuits against short-circuit currents,
protection of circuits against overload currents,
switch,isolation.

1.2 Selection

Technical data of the network at the point considered:
the earthing systems (TNS, TNC),
short-circuit current at the circuit-breaker installation point, which must always be less than the breaking capacity of this device,network normal voltage.
Tripping curves:
B curve (3-5In)
protection for people and big length cables in TN and IT systems.

C curve (5-10In)
protection for resistive and inductive loads with low inrush current.

1.3 Approvals and certificates

Detailed information, please refer to Certificates Table on the last page.

2. Technical data

2.1 Curves

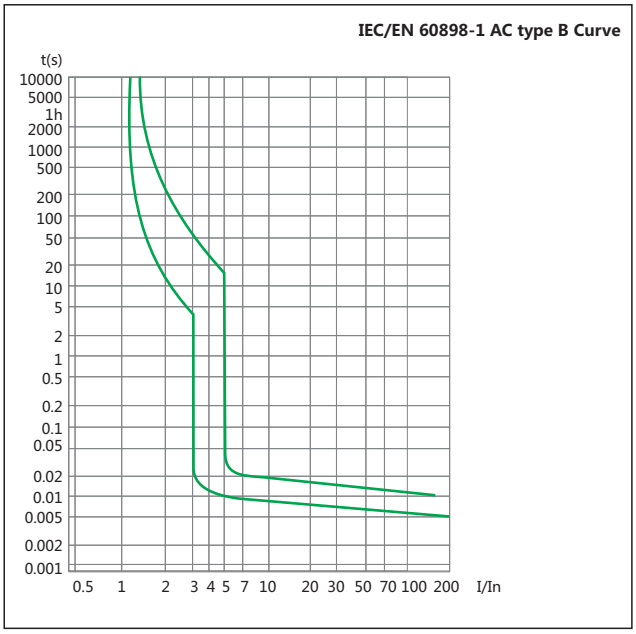

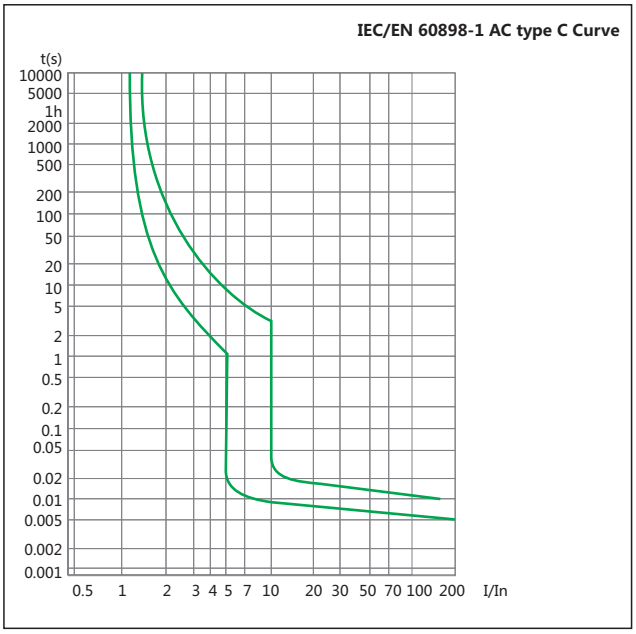

«Электро-Профи» - www.ep.ru

2.2

	Standard		IEC/EN 60898-1
Electrical features	Rated current In	A	1, 2, 3, 4, 6, 10, 16, 20, 25, 32, 40
	Poles		1P+N
	Rated voltage Ue	V	230/240
	Insulation voltage Ui	V	500
	Rated frequency	Hz	50/60
	Rated breaking capacity	A	4500/6000
	Rated impulse withstand voltage(1.2/50) Uimp	V	4000
	Dielectric test voltage at ind. Freq. for 1 min	kV	2
	Pollution degree		2
	Energy limiting class		3
Mechanical features	Electrical life		8, 000
	Mechanical life		20, 000
	Contact position indicator		Yes
	Protection degree		IP20
	Reference temperature for setting of thermal element	℃	30
	Ambient temperature (with daily average≤35℃)	℃	-5...+40
	Storage temperation	℃	-25...+70
Installation	Terminal connection type		Cable/Pin-type busbar
	Terminal size top/bottom for cable	mm^2	16
		AWG	18-5
	Terminal size top/bottom for busbar	mm^2	10
		AWG	18-8
	Tightening torque	N·m	2
		In-Ibs.	18
	Mounting		On DIN rail EN 60715 (35mm) by means of fast clip device
	Connection		From top and bottom
Combination with accessories	Auxiliary contact		Yes
	Shunt release		Yes
	Under voltage release		Yes
	Alarm contant		Yes

2.3 Temperature derating

The maximum permissible current in a circuit breaker depends on the ambient temperature where the circuit breaker is placed. Ambient temperature is the temperature inside the enclosure or switchboard in which the circuit breakers are installed.

The reference temperature is 30℃

Temperature	-10℃	0℃	10℃	20℃	30℃	40℃	50℃	55℃	60℃
Temperature compensation coefficient	1.20	1.15	1.10	1.05	1.00	0.95	0.90	0.875	0.85

3. Overall and mounting dimensions (mm)

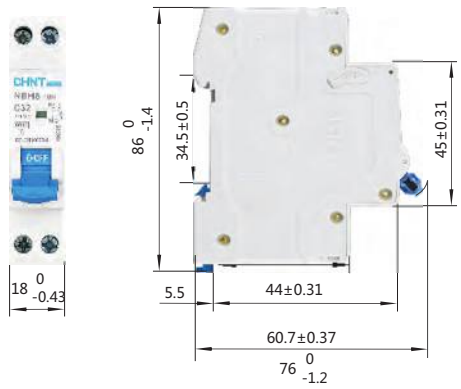

«Электро-Профи» - www.ep.ru

A

Note

«Электро-Профи» - www.ep.ru



DZ158 Moulded Case Circuit Breaker

1. General

1.1 Function

protection of circuits against short-circuit currents,
protection of circuits against overload currents,
switch, isolation.

1.2 Selection

Technical data of the network at the point considered:
the earthing systems (TNS, TNC),
short-circuit current at the circuit-breaker installation point,
which must always be less than the breaking capacity of this device, network normal voltage.

1.3 Approvals and certificates

Detailed information, please refer to Certificates Table on the last page.

«Электро-Профи» - www.ep.ru

A

2. Technical data

2.1 Curves

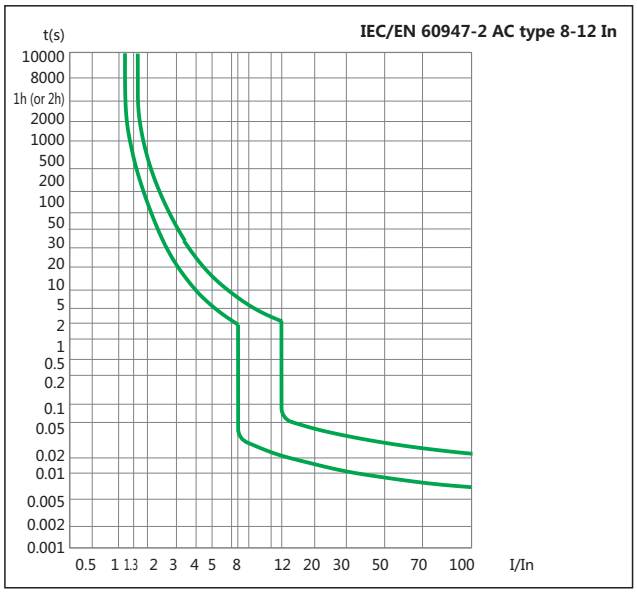

2.2

	Standard		IEC/EN 60947-2
Electrical features	Rated current In	A	63, 80, 100, 125
	Poles		1P, 2P, 3P, 4P
	Rated voltage Ue	V	230/400~240/415
	Insulation voltage Ui	V	500
	Rated frequency	Hz	50
	Rated breaking capacity	kA	6/10
	Rated impulse withstand voltage(1.2/50) Uimp	V	4000
	Dielectric test voltage at ind. Freq. for 1 min	kV	1.89
	Pollution degree		3
	Thermo-magnetic release characteristic		8-12In
Mechanical features	Electrical life		1,500 (In=63A, 80A, 100A) 1,000 (In=125A)
	Mechanical life		8,500 (In=63A, 80A, 100A) 7,000 (In=125A)
	Contact position indicator		Yes
	Protection degree		IP20
	Reference temperature for setting of thermal element	℃	30
	Ambient temperature (with daily average≤35℃)	℃	-5...+40
	Storage temperation	℃	-25...+70
Installation	Terminal connection type		Cable/Pin-type busbar
	Terminal size top/bottom for cable	mm^2	16~50
		AWG	6-0
	Terminal size top/bottom for busbar	mm^2	16~35
		AWG	6-2
	Tightening torque	N·m	3.5
		In-lbs.	31
	Mounting		On DIN rail EN 60715 (35mm) by means of fast clip device
	Connection		From top and bottom
Combination with accessories	Auxiliary contact		Yes

«Электро-Профи» - www.ep.ru

2.3 Temperature derating

The maximum permissible current in a circuit breaker depends on the ambient temperature where the circuit breaker is placed. Ambient temperature is the temperature inside the enclosure or switchboard in which the circuit breakers are installed.

The reference temperature is 30℃

Rated current In (A)	Temperature compensation coefficient under various operational temperature							
	-10℃	0℃	10℃	20℃	30℃	40℃	50℃	60℃
63	1.275	1.215	1.15	1.075	1.00	0.915	0.825	0.735
80	1.27	1.205	1.135	1.07	1.00	0.925	0.845	0.755
100	1.275	1.21	1.135	1.075	1.00	0.925	0.845	0.755
125	1.25	1.19	1.125	1.08	1.00	0.93	0.86	0.78

3. Overall and mounting dimensions (mm)

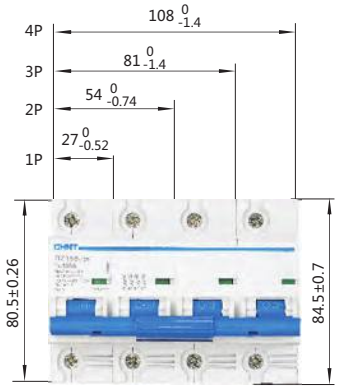

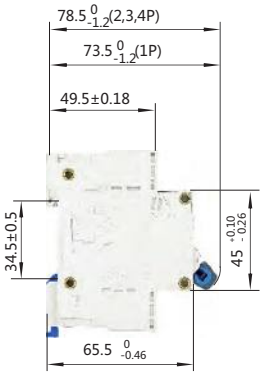

«Электро-Профи» - www.ep.ru

A



NL1 Residual Current Operated Circuit Breaker without over-current protection (Magnetic)

1. General

1.1 Function

Control electric circuits.

Protect people against indirect contacts and additional protection against direct contacts.

Protect installations against fire hazard due to insulation faults.

Residual current circuit breakers are used in housing, tertiary sector and industry.

1.2 Selection

Detectable wave form

AC class

Tripping is ensured for slowly increasing sinusoidal AC residual currents.

A class

Tripping is ensured for sinusoidal AC residual currents and for pulsed DC residual currents, whether applied suddenly or increasing slowly.

S, G/SI class

Tripping is ensured not only for sinusoidal AC residual currents but also for pulsed DC residual currents whether applied suddenly or increasing slowly. S, G/SI type with filters against spurious tripping caused by harmonics and transient surges. With the impact of 8/20us surge 3000A, this high immunity RCCB will still be in stable status.

Tripping sensitivity

10mA - precision instrument leakage protection and bathroom use.

30mA - additional protection against direct contact.

100mA - co-ordinated with the earth system according to the formula IΔn < 50/R, to provide protection against indirect contacts;

300mA/500mA - protection against indirect contacts, as well as fire hazard.

Tripping time

Instantaneous

It ensures instantaneous tripping (without time-delay).

Short time delay G/SI

It ensures any tripping at least 10ms.

Selective S

It ensures total discrimination with a nonselective RCD placed downstream.

1.3 Approvals and certificates

Detailed information, please refer to Certificates Table on the last page.

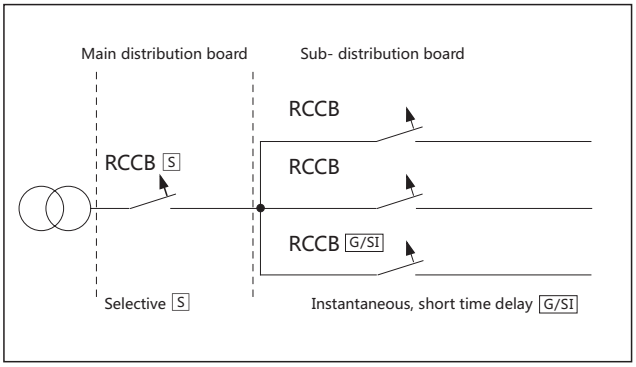

«Электро-Профи» - www.ep.ru

2. Technical data

	Standard		IEC/EN 61008-1
Electrical features	Type (wave form of the earth leakage sensed)		AC, A, AC-G, A-G, AC-S, A-S, A-SI
	Rated current In	A	25, 40, 63, 80, 100
	Poles		2P, 4P
	Rated voltage Ue	V	230/400~240/415
	Rated sensitivity I△n	A	0.01 for 2p 25A,0.03,0.1,0.3,0.5
	Insulation voltage Ui	V	500
	Rated residual making and breaking capacity I△m	A	500 (In=25A/40A), 800(In=80A/100A)
			630 (In=63A)
	Short-circuit current Inc=I△c	A	6000/10000
	SCPD fuse	A	10000
	break time under I△n	s	≤0.1(Normal type), 10ms~300ms(G type). 150ms~500ms(S type)
	Rated frequency	Hz	50/60
	Rated impulse withstand voltage(1.2/50) Uimp	V	6000
	Dielectric test voltage at ind. Freq. for 1 min	kV	2
	Pollution degree		2
Mechanical features	Electrical life		2, 000
	Mechanical life		2, 000
	Fault current indicator		Yes
	Protection degree		IP20
	Ambient temperature (with daily average≤35℃)	℃	-5...+40
	Storage temperation	℃	-25...+70
Installation	Terminal connection type		Cable/U-type busbar/Pin-type busbar
	Terminal size top/bottom for cable	mm^2	25/35
		AWG	18-3/18-2
	Terminal size top/bottom for busbar	mm^2	10/16
		AWG	18-8/18-5
	Tightening torque	N·m	2.5
		In-Ibs.	22
	Mounting		On DIN rail EN 60715 (35mm) by means of fast clip device
	Connection		From top and bottom

3. Overall and mounting dimensions (mm)





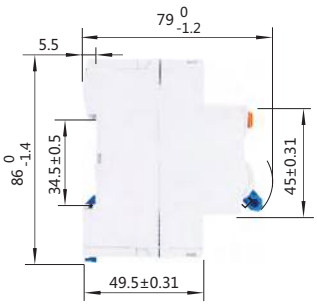

«Электро-Профи» - www.ep.ru

A



NL210 Residual Current Operated Circuit Breaker without over-current protection

1. General

1.1 Function

Control electric circuits.
Protect people against indirect contacts and additional protection against direct contacts.
Protect installations against fire hazard due to insulation faults.
Residual current circuit breakers are used in housing, tertiary sector and industry.

1.2 Selection

Detectable wave form

Type B

Tripping is ensured for sinusoidal AC residual currents pulsed DC residual currents, alternating residual sinusoidal currents up to 1000Hz, pulsating direct residual currents and for smooth direct residual currents, whether applied suddenly or increasing slowly.

Tripping sensitivity

30mA - additional protection against direct contact.
100mA - co-ordinated with the earth system according to the formula IΔn < 50/R, to provide protection against indirect contacts;
300mA - protection against indirect contacts, as well as fire hazard.

Tripping time

Instantaneous

It ensures instantaneous tripping (without time-delay).

1.3 Approvals and certificates

CE, KEMA

1.4 Add-on devices

AX-5 auxiliary contacts
TC-1 terminal cover

«Электро-Профи» - www.ep.ru

2. Technical data

	Standard		IEC/EN 62423 & IEC/EN 61008-1
Electrical features	Type (wave form of the earth leakage sensed)		B
	Rated current In	A	25, 40, 63
	Poles		1P+N, 3P+N
	Rated voltage Ue	V	1P+N:230/240v~; 3P+N:400/415v~;
	Rated sensitivity I△n	A	0.03, 0.1, 0.3
	Insulation voltage Ui	V	500
	Rated residual making and breaking capacity I△m	A	500 (In=25A/40A)
			630 (In=63A)
	Short-circuit current Inc=I△c	A	10,000
	SCPD fuse	A	10000
	break time under I△n	s	≤0.1
	Rated frequency	Hz	50
	Rated impulse withstand voltage(1.2/50) Uimp	V	4,000
	Dielectric test voltage at ind. Freq. for 1 min	kV	2
	Pollution degree		2
Mechanical features	Electrical life		2, 000
	Mechanical life		10,000
	Fault current indicator		Yes
	Protection degree		IP20
	Ambient temperature (with daily average≤35℃)	℃	-25...+40
	Storage temperation	℃	-25...+70
Installation	Terminal connection type		Cable/U-type busbar/Pin-type busbar
	Terminal size top/bottom for cable	mm^2	25/35
		AWG	18-3/18-2
	Terminal size top/bottom for busbar	mm^2	10/16
		AWG	18-8/18-5
	Tightening torque	N·m	2.5
		In-lbs.	22
	Mounting		On DIN rail EN 60715 (35mm) by means of fast clip device
	Connection		From top and bottom

3. Overall and mounting dimensions (mm)

1P+N



3P+N



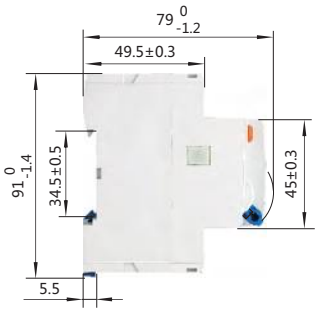

«Электро-Профи» - www.ep.ru

A



NB1L Residual Current Operated Circuit Breaker with over-current protection (Magnetic)

1. General

1.1 Function

Personnel and fire protection: Cable and line protection against
overload and short-circuits.

1.2 Selection

Rated residual operating current

IΔn ≤30 mA: additional protection in the case of direct contact.

IΔn ≤300 mA: preventative fire protection in the case of ground fault currents.

Tripping class

AC class

Tripping is ensured for sinusoidal,
alternating currents, whether they be quickly applied or slowly increase.

A class

Tripping is ensured for sinusoidal, alternating residual currents as well as for pulsed DC residual currents, whether they be quickly applied or slowly increase.

Tripping curve

B curve (3-5 In) protection and control of the circuits against overloads and short-circuits; protection for
people and big length cables in TN and IT systems.

C curve (5-10 In) protection and control of the circuits against overloads and short-circuits; protection for resistive and inductive loads with low inrush current.

1.3 Approvals and certificates

Detailed information, please refer to Certificates Table on the last page.

«Электро-Профи» - www.ep.ru

2. Technical data

2.1 Curves

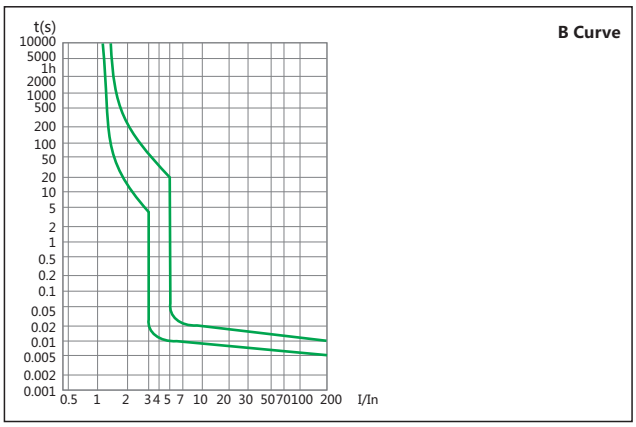

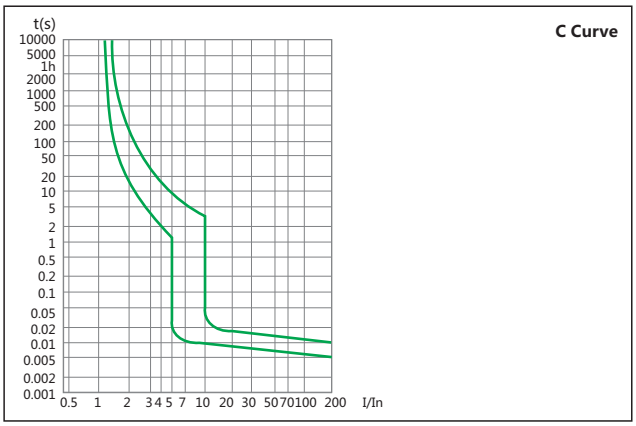

2.2

	Standard		IEC/EN 61009-1		
Electrical features	Type (wave form of the earth leakage sensed)		AC, A		
	Thermo-magnetic release characteristic		B, C		
	Rated current In	A	MCB+add-on RCCB block	1, 2, 3, 4, 6, 8, 10, 13, 16, 20, 25, 32, 40	50, 63
			Combined	1-25/6-40	
	Poles		MCB+add-on RCCB block	1P+N, 2P, 3P, 3P+N, 4P	
			Combined	1P+N, 2P	
	Rated voltage Ue	V	230/400~240/415		
	Rated sensitivity I△n	A	0.03, 0.1, 0.3		
	Rated residual making and breaking capacity I△m	A	500 (In≤40A)		
			630 (In > 40A)		
	Rated short-circuit capacity Icn	A	6,000/10,000		
	Break time under I△n	S	≤0.1		
	Rated frequency	Hz	50/60		
	Rated impulse withstand voltage (1.2/50)Uimp	V	6,000		
	Dielectric TEST voltage at ind. Freq. for 1min	kV	2		
	Insulation voltage Ui		500		
	Pollution degree		2		
Mechanical features	Electrical life		2,000		
	Mechanical life		20,000		
	Contact position indicator		Yes		
	Protection degree		IP20		
	Ambient temperature (with daily average≤35℃)	℃	-5...+40		
	Storage temperature	℃	-25...+70		
Installation	Terminal connection type		Cable/U-type busbar/Pin-type busbar		
	Terminal size top/bottom for cable	mm^2	25		
		AWG	18-3		
	Terminal size top/bottom for busbar	mm^2	10		
		AWG	18-8		
	Tightening torque	N·m	2		
		In-Ibs.	18		
	Mounting		On DIN rail EN 60715 (35mm) by means of fast clip device		
	Connection		From top and bottom (for combined type)		
			From top (MCB+add-on RCCB block)		

«Электро-Профи» - www.ep.ru

A

2.3 Temperature derating

The maximum permissible current in a circuit breaker depends on the ambient temperature where the circuit breaker is placed. Ambient temperature is the temperature inside the enclosure or switchboard in which the circuit breakers are installed.

The reference temperature is 30℃

Temperature	-10℃	0℃	10℃	20℃	30℃	40℃	50℃	60℃
Temperature compensation coefficient of rated current	1.20	1.15	1.10	1.05	1.00	0.95	0.90	0.85

3. Overall and mounting dimensions (mm)

MCB+add-on RCCB block



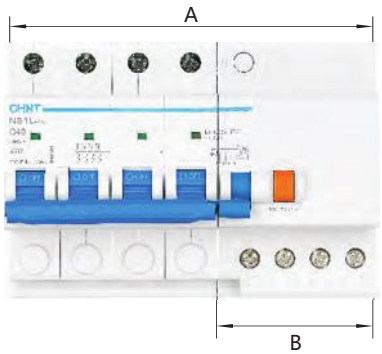

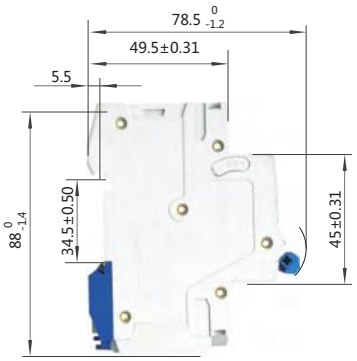

Number of poles	Overall dimensions A (mm)	
	1~40A	50~63A
1P+N	45 0 -0.62	54 0 -0.74
2P	63 0 -0.74	72 0 -0.74
3P	108 0 -1.4	117 0 -1.4
3P+N	108 0 -1.4	117 0 -1.4
4P	126 0 -1.6	135 0 -1.6
B(mm)		
1P+N	27 0 -0.52	36 0 -0.62
2P	27 0 -0.52	36 0 -0.62
3P	54 0 -1.20	63 0 -1.2
3P+N	54 0 -1.20	63 0 -1.2
4P	54 0 -1.20	63 0 -1.2

Combined

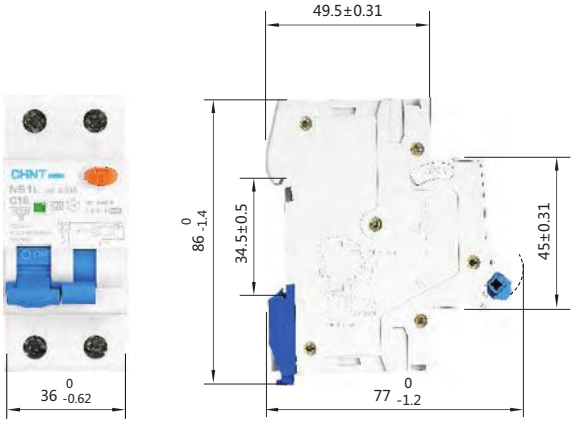

1P+N

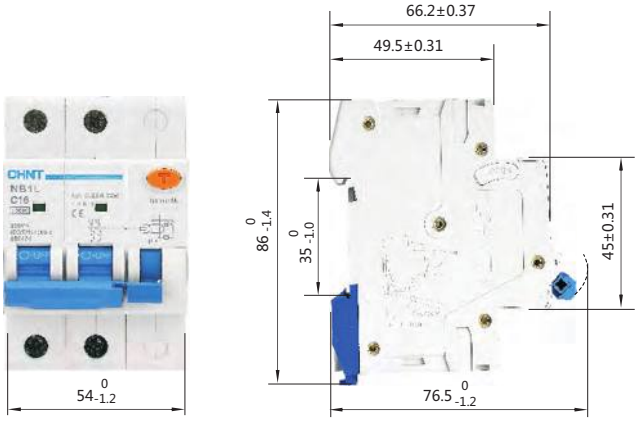

2P

«Электро-Профи» - www.ep.ru



NB3LE Residual Current Operated Circuit Breaker with Over-current Protection (Electronic)

1. General

1.1 Selection

Rated residual operating current

IΔn = 30 mA: additional protection in the case of direct contact.

Tripping class

AC class – Tripping is ensured for sinusoidal, alternating currents, whether they be quickly applied or slowly increase.

Tripping curve

B curve (3-5 In) protection and control of the circuits against overloads and short-circuits; protection for people and big length cables in TN and IT systems.

C curve (5-10 In) protection and control of the circuits against

overloads and short-circuits; protection for resistive and inductive loads with low inrush current.

1.2 Approvals and certificates

Detailed information, please refer to Certificates Table on the last page.

CE SAA

2. Technical data

2.1 Curves

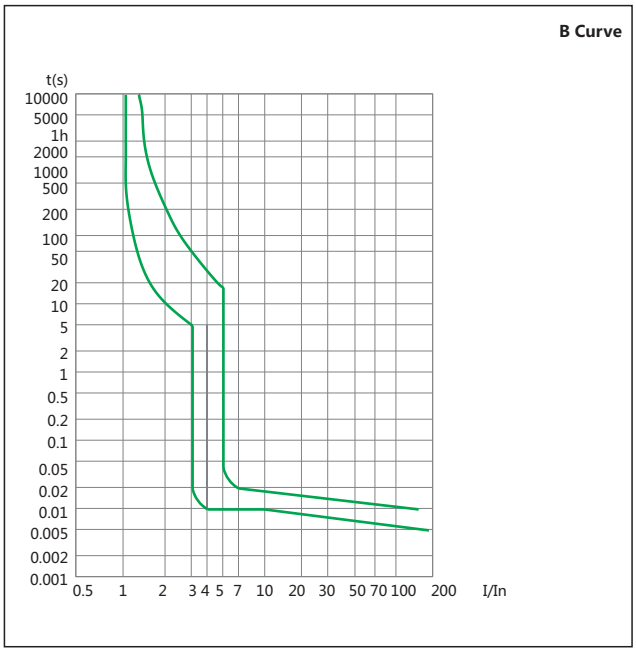

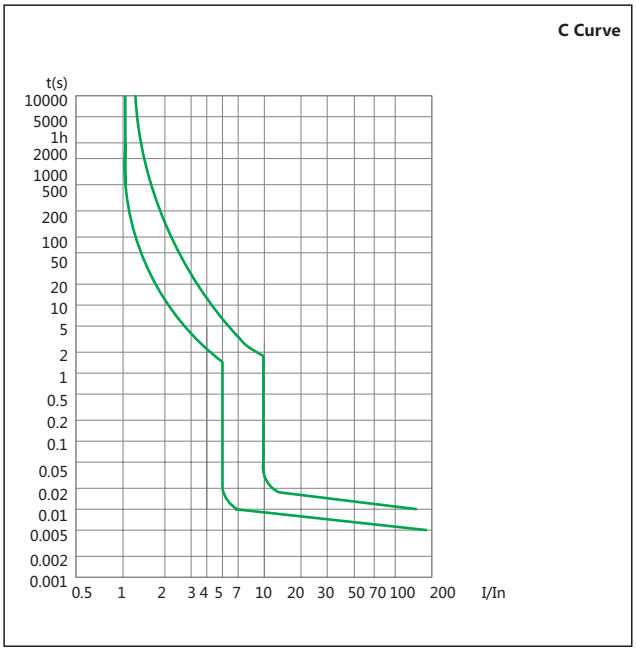

«Электро-Профи» - www.ep.ru

A

2.2

	Standard		IEC/EN 61009-1
Electrical features	Type (wave form of the earth leakage sensed)		AC,A
	Thermo-magnetic release characteristic		B, C
	Rated current In	A	6, 10, 16, 20, 25, 32
	Poles		1P+N
	Rated voltage Ue	V	240
	Rated sensitivity I△n	A	0.03
	Rated residual making and breaking capacity I△m	A	500
	Rated short-circuit capacity Icn	A	6,000
	Break time under I△n	S	≤0.1
	Rated frequency	Hz	50/60
	Rated impulse withstand voltage (1.2/50)Uimp	V	4,000
	Dielectric TEST voltage at ind. Freq. for 1min	kV	2
	Insulation voltage Ui		500
	Pollution degree		2
Mechanical features	Electrical life		2,000
	Mechanical life		2,000
	Contact position indicator		Yes
	Protection degree		IP20
	Ambient temperature (with daily average≤35℃)	℃	-5...+40
	Storage temperature	℃	-25...+70
Installation	Terminal connection type		Cable/U-type busbar/Pin-type busbar
	Terminal size top/bottom for cable	mm^2	16
		AWG	18-5
	Terminal size top/bottom for busbar	mm^2	10
		AWG	18-8
	Tightening torque	N·m	2
		In-lbs.	18
	Mounting		On DIN rail EN 60715 (35mm) by means of fast clip device
	Connection		From top

2.3 Temperature derating

The maximum permissible current in a circuit breaker depends on the ambient temperature where the circuit breaker is placed. Ambient temperature is the temperature inside the enclosure or switchboard in which the circuit breakers are installed. **The reference temperature is 30℃** Ambient temperature: -5℃~+40℃.

Temperature	-10℃	0℃	10℃	20℃	30℃	40℃	50℃	60℃
Temperature compensation coefficient of rated current	1.20	1.15	1.10	1.05	1.00	0.95	0.90	0.85

3. Overall and mounting dimensions (mm)

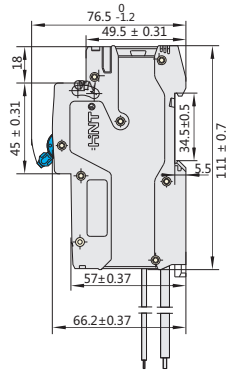

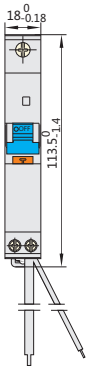

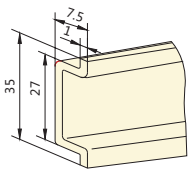

«Электро-Профи» - www.ep.ru



NB3LEU Residual Current Operated Circuit Breaker with Over-current Protection (Electronic)

1. General

1.1 Selection

Rated residual operating current

IΔn = 30 mA:
additional protection in the case of direct contact.

Tripping class

AC class – Tripping is ensured for sinusoidal, alternating currents, whether they be quickly applied or slowly increase.

Tripping curve

B curve (3-5 In) protection and control of the circuits against overloads and short-circuits; protection for people and big length cables in TN and IT systems.
C curve (5-10 In) protection and control of the circuits against
overloads and short-circuits; protection for resistive and inductive loads with low inrush current.

1.2 Approvals and certificates

Detailed information, please refer to Certificates Table on the last page.

2. Technical data

2.1 Curves

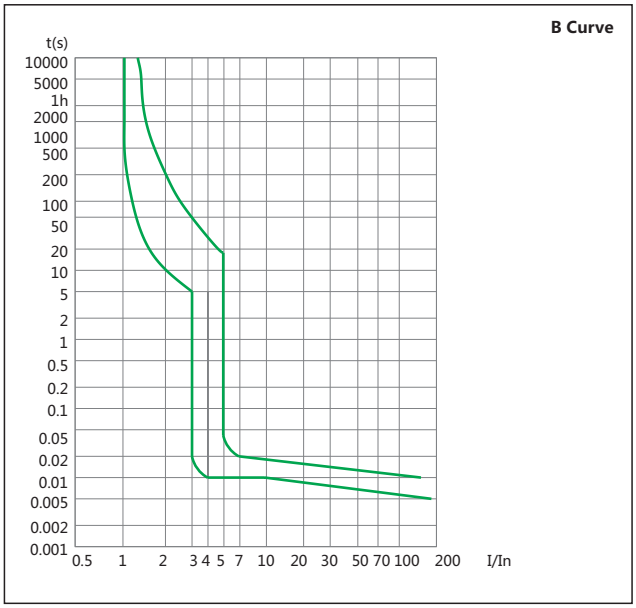

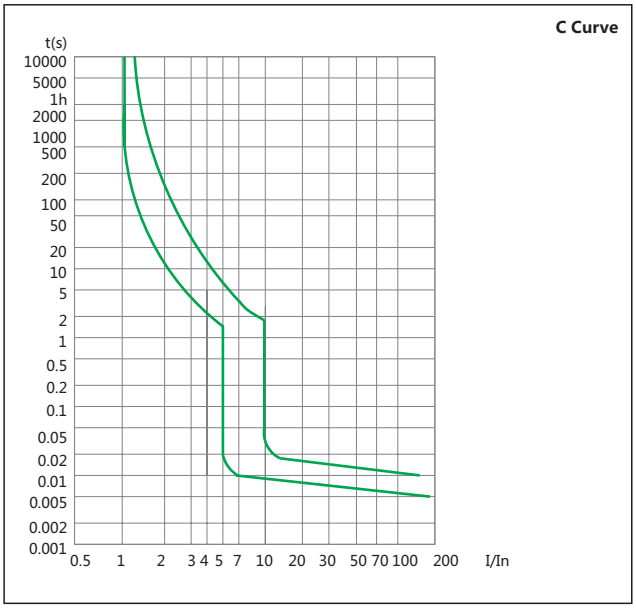

«Электро-Профи» - www.ep.ru

A

2.2

	Standard		IEC/EN 61009-1
Electrical features	Type (wave form of the earth leakage sensed)		AC,A
	Thermo-magnetic release characteristic		B, C
	Rated current In	A	2, 6, 10, 13, 16, 20, 25, 32, 40, 45, 50
	Poles		1P+N
	Rated voltage Ue	V	240
	Rated sensitivity I△n	A	0.03
	Rated residual making and breaking capacity I△m	A	500
	Rated short-circuit capacity Icn	A	10,000
	Break time under I△n	S	≤0.1
	Rated frequency	Hz	50/60
	Rated impulse withstand voltage (1.2/50)Uimp	V	4,000
	Dielectric TEST voltage at ind. Freq. for 1min	kV	2
	Insulation voltage Ui		500
	Pollution degree		2
Mechanical features	Electrical life		2,000
	Mechanical life		2,000
	Contact position indicator		Yes
	Protection degree		IP20
	Ambient temperature (with daily average≤35℃)	℃	-5...+40
	Storage temperature	℃	-25...+70
Installation	Terminal connection type		Cable/U-type busbar/Pin-type busbar
	Terminal size top/bottom for cable	mm^2	16
		AWG	18-5
	Terminal size top/bottom for busbar	mm^2	10
		AWG	18-8
	Tightening torque	N·m	2
		In-lbs.	18
	Mounting		On DIN rail EN 60715 (35mm) by means of fast clip device
	Connection		From bottom

2.3 Temperature derating

The maximum permissible current in a circuit breaker depends on the ambient temperature where the circuit breaker is placed. Ambient temperature is the temperature inside the enclosure or switchboard in which the circuit breakers are installed.

The reference temperature is 30℃

Temperature	-10℃	0℃	10℃	20℃	30℃	40℃	50℃	60℃
Temperature compensation coefficient of rated current	1.20	1.15	1.10	1.05	1.00	0.95	0.90	0.85

3. Overall and mounting dimensions (mm)

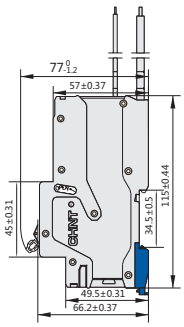

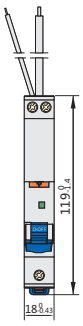

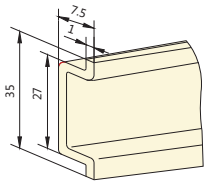

«Электро-Профи» - www.ep.ru



NB3LEG Residual Current Operated Circuit Breaker with Over-current Protection (Electronic)

1. General

1.1 Selection

Rated residual operating current

IΔn ≤ 30 mA: additional protection in the case of direct contact.

Tripping class

AC class – Tripping is ensured for sinusoidal, alternating currents, whether they be quickly applied or slowly increase.

A class

Tripping is ensured for sinusoidal, alternating residual currents as well as for pulsed DC residual currents, whether they be quickly applied or slowly increase.

Tripping curve

B curve (3-5 In) protection and control of the circuits against overloads and short-circuits; protection for people and big length cables in TN and IT systems.

C curve (5-10 In) protection and control of the circuits against

overloads and short-circuits; protection for resistive and inductive loads with low inrush current.

1.2 Approvals and certificates

Detailed information, please refer to Certificates Table on the last page.

2. Technical data

2.1 Curves

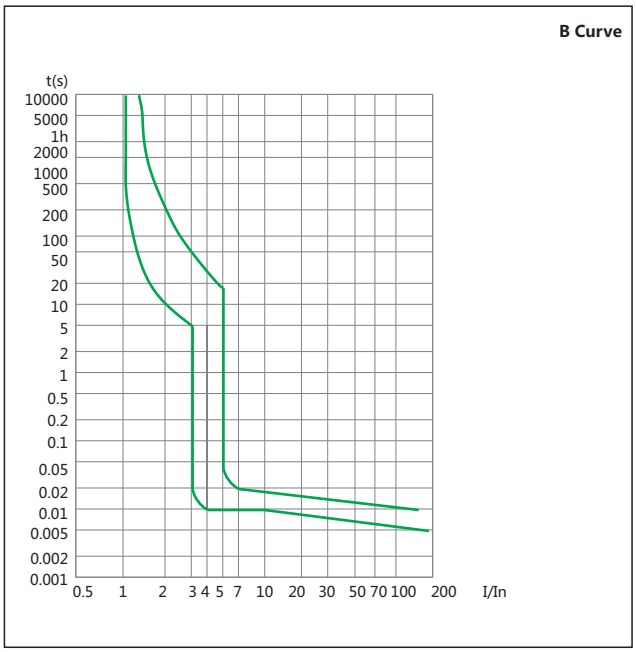

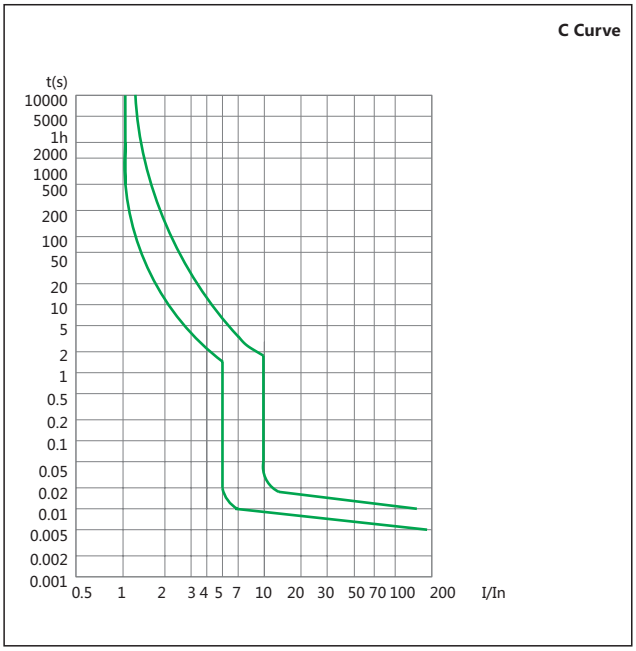

«Электро-Профи» - www.ep.ru

A

2.2

	Standard		BS EN61009-1
Electrical features	Type (wave form of the earth leakage sensed)		AC, A
	Thermo-magnetic release characteristic		B, C
	Rated current In	A	6, 10, 13, 16, 20, 25, 32 , 40
	Poles		1P+N
	Rated voltage Ue	V	240V AC
	Rated sensitivity I△n	A	0.01 , 0.03
	Rated residual making and breaking capacity I△m	A	3000
	Rated short-circuit capacity Icn	A	6,000
	Break time under I△n	s	≤0.1
	Rated frequency	Hz	50
	Rated impulse withstand voltage (1.2/50)Uimp	V	4,000
	Dielectric TEST voltage at ind. Freq. for 1min	kV	2
	Insulation voltage Ui		500
	Pollution degree		2
Mechanical features	Electrical life		2,000
	Mechanical life		2,000
	Contact position indicator		Yes
	Protection degree		IP20
	Ambient temperature (with daily average≤35℃)	℃	-5...+40
	Storage temperature	℃	-25...+70
Installation	Terminal connection type		Cable/U-type busbar/Pin-type busbar
	Terminal size top/bottom for cable	mm^2	16
		AWG	18-5
	Terminal size top/bottom for busbar	mm^2	10
		AWG	18-8
	Tightening torque	N·m	2
		In-lbs.	18
	Mounting		On DIN rail EN 60715 (35mm) by means of fast clip device
	Connection		From top

2.3 Temperature derating

The maximum permissible current in a circuit breaker depends on the ambient temperature where the circuit breaker is placed. Ambient temperature is the temperature inside the enclosure or switchboard in which the circuit breakers are installed. **The reference temperature is 30℃** Ambient temperature: -5℃~+40℃.

Temperature	-10℃	0℃	10℃	20℃	30℃	40℃	50℃	60℃
Temperature compensation coefficient of rated current	1.20	1.15	1.10	1.05	1.00	0.95	0.90	0.85

3. Overall and mounting dimensions (mm)

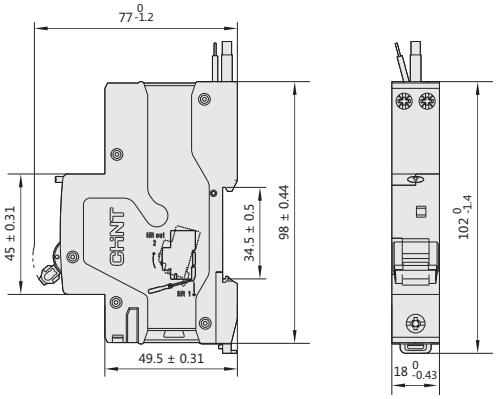

«Электро-Профи» - www.ep.ru



NBH8LE Residual Current Operated Circuit Breaker with over-current protection (Electronic)

1. General

1.1 Function

Personnel and fire protection
Cable and line protection against overload and short-circuits.

1.2 Selection

IΔn = 10mA, 30mA: additional protection in the case of direct contact.
C curve (5-10 In) protection and control of the circuits against overloads and short-circuits; protection for resistive and inductive loads with low inrush current.
AC class – Tripping is ensured for sinusoidal, alternating currents, whether they be quickly applied or slowly increase.

1.3 Approvals and certificates

Detailed information, please refer to Certificates Table on the last page.

2. Technical data

2.1 Curves

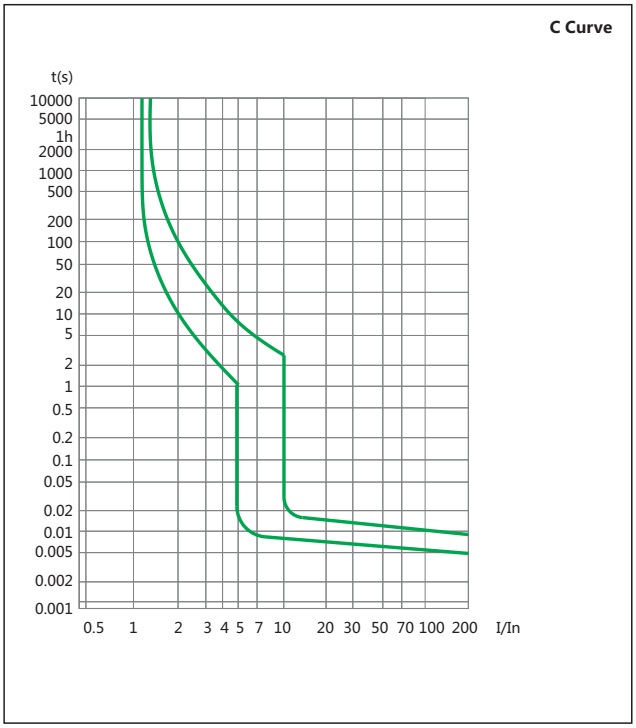

«Электро-Профи» - www.ep.ru

A

2.2

	Standard		IEC/EN 61009-1
Electrical features	Type (wave form of the earth leakage sensed)		AC
	Thermo-magnetic release characteristic		C
	Rated current In	A	1, 2, 3, 4, 6, 10, 16, 20, 25, 32, 40
	Poles		1P+N
	Rated voltage Ue	V	230/240
	Rated sensitivity I△n	A	0.01, 0.03
	Rated residual making and breaking capacity I△m	A	500
	Rated short-circuit capacity Icn	A	4500/6000
	Break time under I△n	S	≤0.1
	Rated frequency	Hz	50/60
	Rated impulse withstand voltage (1.2/50)Uimp	V	4,000
	Dielectric TEST voltage at ind. Freq. for 1min	kV	2
	Insulation voltage Ui	V	300
	Pollution degree		2
Mechanical features	Electrical life		4,000
	Mechanical life		20,000
	Contact position indicator		Yes
	Protection degree		IP20
	Ambient temperature (with daily average≤35℃)	℃	-5...+40
	Storage temperature	℃	-25...+70
Installation	Terminal connection type		Cable/Pin-type busbar
	Terminal size top/bottom for cable	mm^2	16
		AWG	18-5
	Terminal size top/bottom for busbar	mm^2	10
		AWG	18-8
	Tightening torque	N·m	2
		In-lbs.	11
	Mounting		On DIN rail EN 60715 (35mm) by means of fast clip device
	Connection		From top

2.3 Temperature derating

The maximum permissible current in a circuit breaker depends on the ambient temperature where the circuit breaker is placed. Ambient temperature is the temperature inside the enclosure or switchboard in which the circuit breakers are installed.

The reference temperature is 30℃

Temperature	-10℃	0℃	10℃	20℃	30℃	40℃	50℃	60℃
Temperature compensation coefficient	1.20	1.15	1.10	1.05	1.00	0.95	0.90	0.85

3. Overall and mounting dimensions (mm)

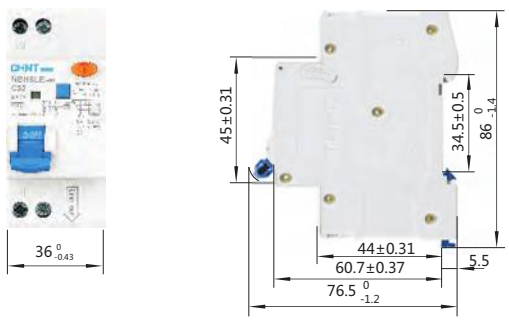

«Электро-Профи» - www.ep.ru



DZ158LE
Residual Current Operated Circuit Breaker

1. General

1.1 Function

Personnel and fire protection
Cable and line protection against overload and short-circuits.

1.2 Selection

IΔn ≤ 30 mA: additional protection in the case of direct contact.
IΔn ≤300 mA: preventative fire protection in the case of ground fault currents.
AC class – Tripping is ensured for sinusoidal, alternating currents, whether they be quickly applied or slowly increase.

1.3 Approvals and certificates

Detailed information, please refer to Certificates Table on the last page.

2. Technical data

2.1 Curves

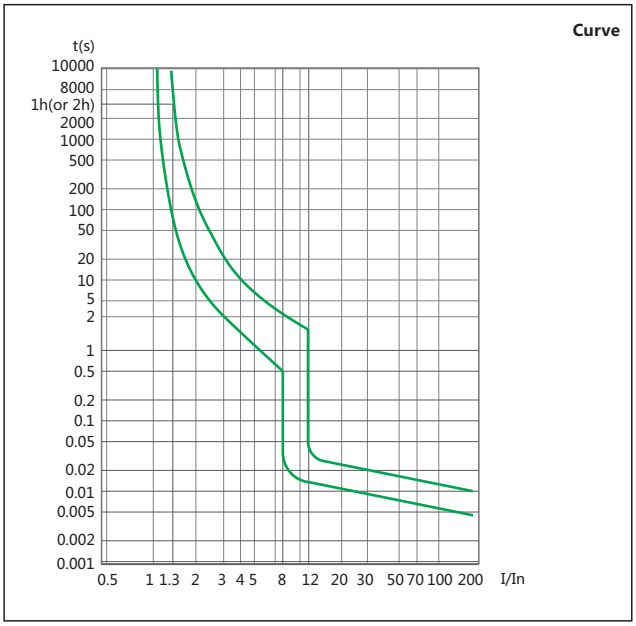

«Электро-Профи» - www.ep.ru

A

2.2

	Standard		IEC/EN 60947-2
Electrical features	Type (wave form of the earth leakage sensed)		AC
	Thermo-magnetic release characteristic		8-12In
	Rated current In	A	63, 80, 100
	Poles		1P+N, 2P, 3P, 3P+N, 4P
	Rated voltage Ue	V	230/400
	Rated sensitivity I△n	A	0.03, 0.1, 0.3
	Rated residual making and breaking capacity I△m	A	2,000
	Rated short-circuit capacity Icn	A	6,000
	Break time under I△n	S	≤0.1
	Rated frequency	Hz	50
	Rated impulse withstand voltage (1.2/50)Uimp	V	4,000
	Dielectric TEST voltage at ind. Freq. for 1min	kV	1.89
	Insulation voltage Ui	V	500
	Pollution degree		3
Mechanical features	Electrical life		1,500
	Mechanical life		8,500
	Contact position indicator		Yes
	Protection degree		IP20
	Ambient temperature (with daily average≤35℃)	℃	-5...+40
	Storage temperature	℃	-25...+70
Installation	Terminal connection type		Cable/Pin-type busbar
	Terminal size top/bottom for cable	mm^2	16~50
		AWG	6-0
	Terminal size top/bottom for busbar	mm^2	16~35
		AWG	6-2
	Tightening torque	N·m	3.5
		In-Ibs.	31
	Mounting Connection		On DIN rail EN 60715 (35mm) by means of fast clip device From top

2.3 Temperature derating

The maximum permissible current in a circuit breaker depends on the ambient temperature where the circuit breaker is placed. Ambient temperature is the temperature inside the enclosure or switchboard in which the circuit breakers are installed.

The reference temperature is 30℃

Rated current In (A)	Temperature compensation coefficient under various operational temperature							
	-10℃	0℃	10℃	20℃	30℃	40℃	50℃	60℃
63	1.275	1.215	1.15	1.075	1.00	0.915	0.825	0.735
80	1.27	1.205	1.135	1.27	1.00	0.925	0.845	0.755
100	1.275	1.21	1.135	1.075	1.00	0.925	0.845	0.755

«Электро-Профи» - www.ep.ru

3. Overall and mounting dimensions (mm)

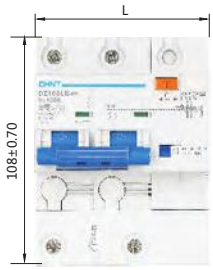

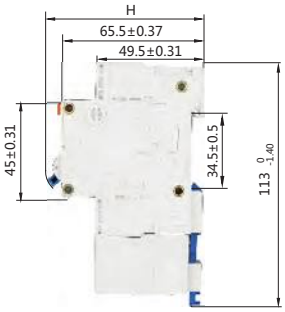

Number of poles	1P+N	2P	3P	3P+N	4P
L (mm)	$54^{0}_{-0.74}$	$81^{0}_{-0.87}$	$108^{0}_{-1.40}$	$108^{0}_{-1.40}$	$135^{0}_{-1.60}$
H (mm)	$73.5^{0}_{-1.2}$	$78.5^{0}_{-1.2}$	$78.5^{0}_{-1.2}$	$78.5^{0}_{-1.2}$	$78.5^{0}_{-1.2}$

«Электро-Профи» - www.ep.ru

A



NB2LE Residual Current Operated Circuit Breaker

1. General

The NB2LE residual current operated circuit breakers are suitable for lines with AC 50/60Hz, rated voltage 240V, rated current up to 40A and for purposes of residual current protection, overload and short circuit protection. When any personal electric shock occurs or the circuit leakage current exceeds the predetermined value, the residual current operated circuit breaker can automatically cut off the power supply in a very short period of time, so that the safety of persons and electrical equipment can be protected. The residual current operated circuit breaker can be used for infrequent conversion of lines under normal conditions, and applied under occasions such as industrial, and commercial, high-rise buildings and residential houses.

2. Type designation

N B 2 LE / □-□

- Rated residual operating current
- Instantaneous trip type and rated current (A)
- Function Code (electronic residual current)
- Design sequence No.
- Miniature Circuit Breaker
- Company Code

3. Technical data

3.1 The tripping characteristic curves are as shown in Fig. 1.

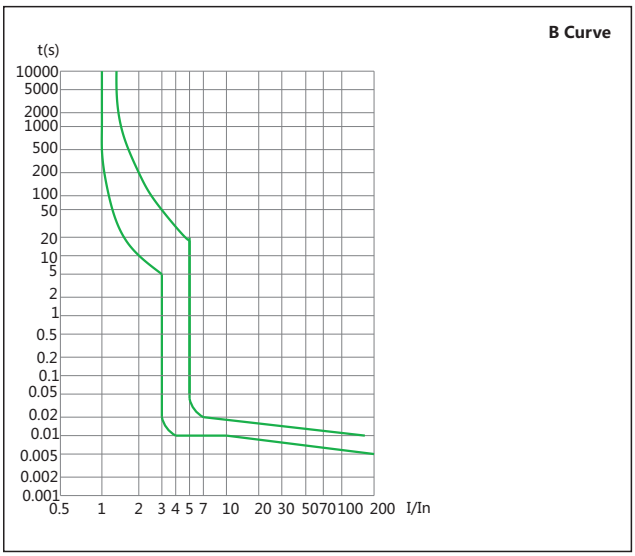

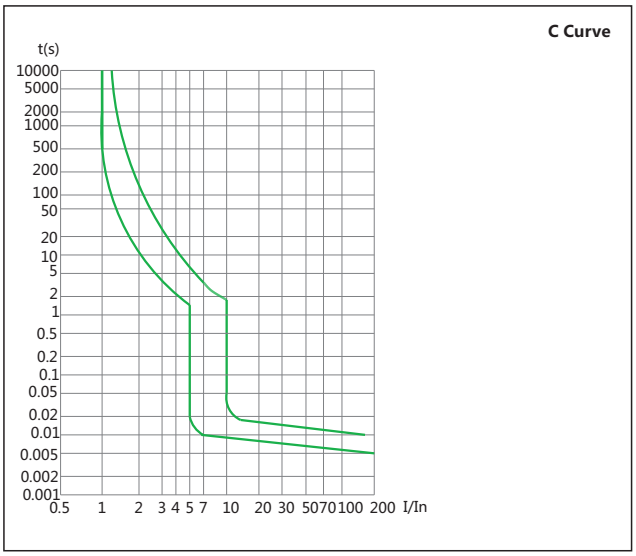

«Электро-Профи» - www.ep.ru

3.2

	Standard		IEC/EN 61009-1
Main Specifications	Rated current In	A	6, 10, 16, 20, 25, 32, 40
	Classified by Type of Instantaneous Tripping		Type B: (3 ~ 5) In,Type C: (5 ~ 10) In
	Poles		1P + N
	Type(wave form of the earth leakage sensed)		Type AC, Type A
Technical Parameters	Rated voltage Ue	V	AC240
	Frame size rated current Inm	A	40
	Rated residual operating current I △ n	A	0.03
	Rated residual non-operating current I △ no	A	0.015
	Rated short-circuit breaking capacity Icn	A	6000
	Rated residual making and breaking capacity I △ m	A	3000
	Electrical life		2,000
	Mechanical life		2,000
	Rated impuse withstand voltage Uimp	V	6,000
	Connection		From top and bottom

3.3 The residual current breaking times

In(A)	I△n(A)	Breaking time when the residual current assumes the following values (s)				
		I△n	2 I△n	5 I△n	5A,10A,20A,50A,100A,200A,500A[a]	I△t[b]
6~40	0.03	0.1	0.05	0.04	0.04	0.04

a. For tests of 5A,10A,20A,50A,100A,200A and 500A, the current values beyond the lower limit of over-current instantaneous tripping are not tested.
b. Tests are done when I△t is equal to the lower limit current of over-current instantaneous tripping of type B and type C.

3.4 The over-current protection characteristics

No.	Rated current In (A)	Initial state	Test current (A)	Specified time (t)	Expected result	Remarks
a	6~40	Cold state	1.13In	t≥1h	Non-tripping	
b		Immediately after sequence a	1.45In	t < h	Tripping	Increase to the specified current within 5s after test item a.
c		Cold state	2.55In	1s < t < 60s	Tripping	
d		Cold state	3In	t≥0.1s	Non-tripping	Type B
			5In	t < 0.1s	Tripping	
			5In	t≥0.1s	Non-tripping	Type C
			10In	t < 0.1s	Tripping	

4. Overall and mounting dimensions (mm)

The product shall be mounted using mounting rail of 35-7.5 section steel.
The overall and mounting dimensions are as shown in Fig. 2 and Fig. 3.

Fig. 2 Overall and installation dimensions

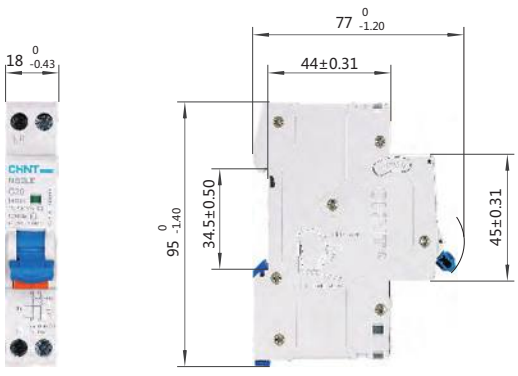

Fig. 3 Mounting rail size

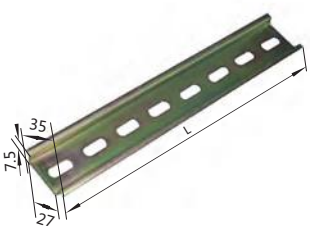

«Электро-Профи» - www.ep.ru

A

5. Ordering information

5.1 When ordering, the following information must be indicated:

a. Product type and description, such as: NB2LE residual current operated circuit breaker;
b. Rated current, such as: 25A;
c. Instantaneous tripping type, such as: Type C;
d. Rated residual operating current, such as: 0.03A
e. Operating conditions when containing DC component, such as: Type A;
f. Ordering quantity, such as: 90 units.

5.2 Ordering examples: NB2LE residual current operated circuit breaker C25, 0.03A, A type, 90 units.

«Электро-Профи» - www.ep.ru



NB310L Residual Current Operated Circuit Breaker with over-current protection (Magnetic)

1. General

1.1 Function

Personnel and fire protection: Cable and line protection against overload and short-circuits.

1.2 Selection

Rated residual operating current

IΔn = 30mA,300mA: additional protection in the case of direct contact.

Tripping class

A and AC class

A class tripping is ensured for sinusoidal, alternating residual currents as well as for pulsed DC residual currents, whether they be quickly or slowly increase.

AC class tripping is ensured for sinusoidal, alternating residual currents, whether they be quickly or slowly increase.

Tripping curve

B curve (3 In-5 In) protection and control of the circuits against overloads and short-circuits; protection for people and big length cables in TN and IT systems.

C curve (5 In-10 In) protection and control of the circuits against overloads and short-circuits; protection for resistive and inductive loads with low inrush current.

1.3 Approvals and certificates

CE/CB/KEMA

1.4 Add-on devices

XF9 auxiliary contacts

S9 shunt release

V9 under voltage release

OVT-1 over voltage release

2. Technical data

2.1 Curves

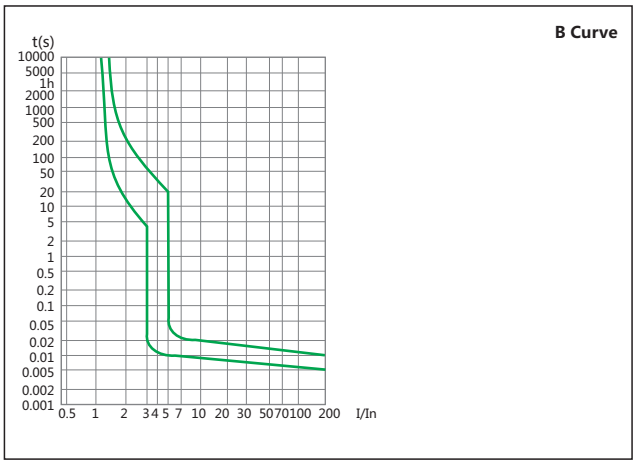

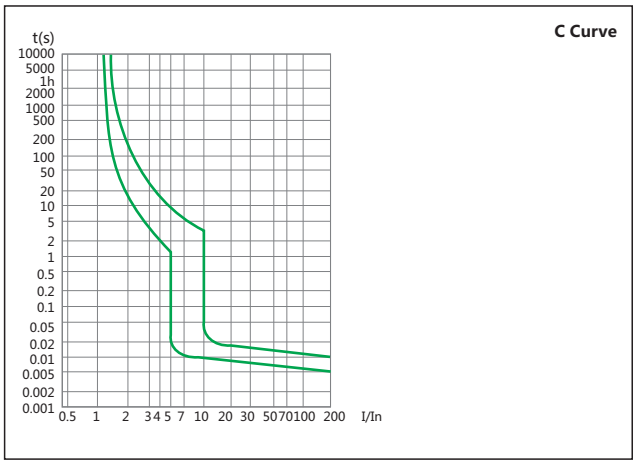

«Электро-Профи» - www.ep.ru

A

2.2

	Standard		IEC/EN 61009-1	
Electrical features	Type (wave form of the earth leakage sensed)		A	A, AC
	Thermo-magnetic release characteristic		B, C	
	Rated current In	A	6, 10, 13, 16, 20, 25, 32	6, 10, 13, 16, 20, 25, 32, 40
	Poles		2P	3P+N
	Rated voltage Ue	V	230/240	230/400
	Rated sensitivity I△n	A	0.03	0.03,0.3
	Rated residual making and breaking capacity I△m	A	3,000	
	Rated short-circuit capacity Icn	A	6,000	
	Break time under I△n	s	≤0.1	
	Rated frequency	Hz	50/60	
	Rated impulse withstand voltage (1.2/50)Uimp	V	4,000	4,000
	Dielectric TEST voltage at ind. Freq. for 1min	kV	2	
	Insulation voltage Ui		500	
	Pollution degree		2	
Mechanical features	Electrical life		2,000	
	Mechanical life		10,000	
	Contact position indicator		Yes	
	Protection degree		IP20	
	Ambient temperature (with daily average≤35℃)	℃	-25...+40	
	Storage temperature	℃	-25...+70	
Installation	Terminal connection type		Cable/U-type busbar/Pin-type busbar	
	Terminal size top/bottom for cable	mm^2	25	
		AWG	18-5	
	Terminal size top/bottom for busbar	mm^2	10	
		AWG	18-8	
	Tightening torque	N·m	2	
		In-lbs.	18	
	Mounting		On DIN rail EN 60715 (35mm) by means of fast clip device	
	Connection		From top and bottom	

2.3 Temperature derating

The maximum permissible current in a circuit breaker depends on the ambient temperature where the circuit breaker is placed. Ambient temperature is the temperature inside the enclosure or switchboard in which the circuit breakers are installed.

The reference temperature is 30℃

Temperature	-10℃	0℃	10℃	20℃	30℃	40℃	50℃	60℃
Temperature compensation coefficient of rated current	1.20	1.15	1.10	1.05	1.00	0.95	0.90	0.85

3. Overall and mounting dimensions (mm)

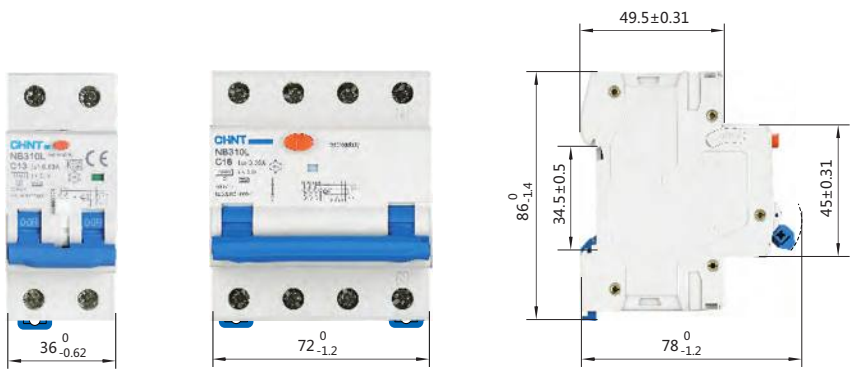

«Электро-Профи» - www.ep.ru



XF9 (Auxiliary Contact for NB1, NBH8, NB1L, NBH8LE)

1. General

Indication of the position of the device's contacts.
To be mounted on the left side of the MCBs/RCBOs thanks to the special pin.

CE

2. Technical data

	Standard		IEC/EN 60947-5-1	
Electrical features	Rated value		UN (V)	In (A)
			AC415 50/60Hz	3
			AC240 50/60Hz	6
			DC130	1
			DC48	2
			DC24	6
	Configurations		1N/O+1N/C	
	Rated impulse withstand voltage (1.2/50)Uimp	V	4,000	
	Dielectric TEST voltage at ind. Freq. for 1min	kV	2	
	Insulation voltage Ui	V	500	
	Pollution degree		2	
Mechanical features	Electrical life		6,050	
	Mechanical life		10,000	
	Protection degree		IP20	
	Ambient temperature (with daily average≤35℃)	℃	-5...+40	
	Storage temperature	℃	-25...+70	
Installation	Terminal connection type		Cable	
	Terminal size top/bottom for cable	mm^2	2.5	
		AWG	18-14	
	Tightening torque	N·m	0.8	
		In-lbs.	7	

«Электро-Профи» - www.ep.ru

A

3. Overall and mounting dimensions (mm)





XF9J (Alarm Auxiliary Contact for NB1, NBH8, NB1L, NBH8LE)

1. General

1.1 Indication of the position of the device's contacts only after the automatic release of the MCBs and RCBOs due to an overload or a short-circuit.

1.2 To be mounted on the left side of the MCBs/RCBOs thanks to the special pin.

CE

2. Technical data

	Standard		IEC/EN 60947-5-1	
Electrical features	Rated value		UN (V)	In (A)
			AC415 50/60Hz	3
			AC240 50/60Hz	6
			DC130	1
			DC48	2
			DC24	6
	Configurations		1N/O+1N/C	
	Rated impulse withstand voltage (1.2/50)Uimp	V	4,000	
	Dielectric TEST voltage at ind. Freq. for 1min	kV	2	
	Insulation voltage Ui	V	500	
	Pollution degree		2	
Mechanical features	Electrical life		6,050	
	Mechanical life		10,000	
	Protection degree		IP20	
	Ambient temperature (with daily average≤35℃)	℃	-5...+40	
	Storage temperature	℃	-25...+70	
Installation	Terminal connection type		Cable	
	Terminal size top/bottom for cable	mm^2	2.5	
		AWG	18-14	
	Tightening torque	N·m	0.8	
		In-Ibs.	7	

«Электро-Профи» - www.ep.ru

A

3. Overall and mounting dimensions (mm)

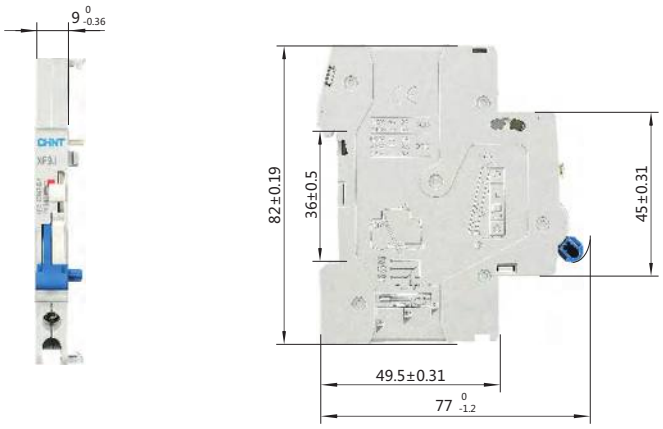

«Электро-Профи» - www.ep.ru



S9
(Shunt Release for NB1, NBH8, NB1L, NBH8LE)

1. General

1.1 Remote opening of the device when a voltage is applied.

1.2 To be mounted on the left side of the MCBs/RCBOs thanks to the special pin.

CE

2. Technical data

	Standard		IEC/EN 60947-5-1
Electrical features	Rated voltage Us	V	AC230/400 50/60Hz
			AC/DC24
			AC/DC48
	Rated impulse withstand voltage (1.2/50)Uimp	V	4,000
	Dielectric TEST voltage at ind. Freq. for 1min	kV	2
	Insulation voltage Ui	V	500
	Pollution degree		2
Mechanical features	Electrical life		4,000
	Mechanical life		4,000
	Protection degree		IP20
	Ambient temperature (with daily average≤35℃)	℃	-5...+40
	Storage temperature	℃	-25...+70
Installation	Terminal connection type		Cable
	Terminal size top/bottom for cable	mm^2	2.5
		AWG	18-14
	Tightening torque	N·m	0.8
		In-lbs.	7

«Электро-Профи» - www.ep.ru

A

3. Overall and mounting dimensions (mm)



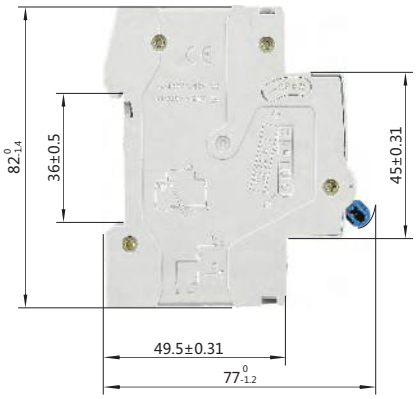

«Электро-Профи» - www.ep.ru



V9
(Under Voltage Release for NB1, NBH8, NB1L,NBH8LE)

1. General

1.1 Protection of the load in the event of a voltage drop (between 70% and 35% of its rated value)

1.2 Positive safety (device's tripping when the voltage is disconnected) emergency stop by means of a button.

1.3 To be mounted on the left side of the MCBs/RCBOs thanks to the special pin.

CE

2. Technical data

	Standard		IEC/EN 60947-5-1
Electrical features	Rated voltage Us	V	AC230 50/60Hz
	Optional voltage of release		70-35%Ue, reliable operation
			< 35%Ue, prevent breaker from making
			85~110%Ue, reliable operation
	Rated impulse withstand voltage (1.2/50)Uimp	V	4,000
	Dielectric TEST voltage at ind. Freq. for 1min	kV	2
	Insulation voltage Ui	V	500
	Pollution degree		2
Mechanical features	Electrical life		4,000
	Mechanical life		4,000
	Protection degree		IP20
	Ambient temperature (with daily average≤35℃)	℃	-5...+40
	Storage temperature	℃	-25...+70
Installation	Terminal connection type		Cable
	Terminal size top/bottom for cable	mm^2	2.5
		AWG	18-14
	Tightening torque	N·m	0.8
		In-lbs.	7

«Электро-Профи» - www.ep.ru

A

3. Overall and mounting dimensions (mm)

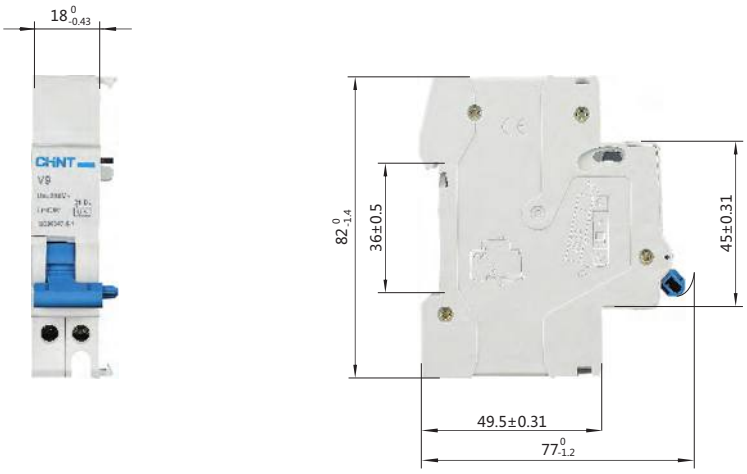

«Электро-Профи» - www.ep.ru



AX-1 (Auxiliary Contact for DZ158, DZ158LE)

1. General

1.1 Indication of the position of the device's contacts.

1.2 To be mounted on the left side of the MCBs/RCBOs thanks to the special pin.

CE

2. Technical data

	Standard		IEC/EN 60947-5-1	
Electrical features	Rated voltage Us	V	Un (V)	In (A)
			AC415 50/60Hz	3
			DC125	1
	Configurations		1N/O+1N/C	
	Rated impulse withstand voltage (1.2/50)Uimp	V	4,000	
	Dielectric TEST voltage at ind. Freq. for 1min	kV	2	
	Insulation voltage Ui	V	500	
	Pollution degree		2	
Mechanical features	Electrical life		6,050	
	Mechanical life		10,000	
	Protection degree		IP20	
	Ambient temperature (with daily average≤35℃)	℃	-5...+40	
	Storage temperature	℃	-25...+70	
Installation	Terminal connection type		Cable	
	Terminal size top/bottom for cable	mm^2	2.5	
		AWG	18-14	
	Tightening torque	N·m	0.8	
		In-lbs.	7	

3. Ordering information



Model	Order Code
AX-1	985483

«Электро-Профи» - www.ep.ru

A

4. Overall and mounting dimensions (mm)

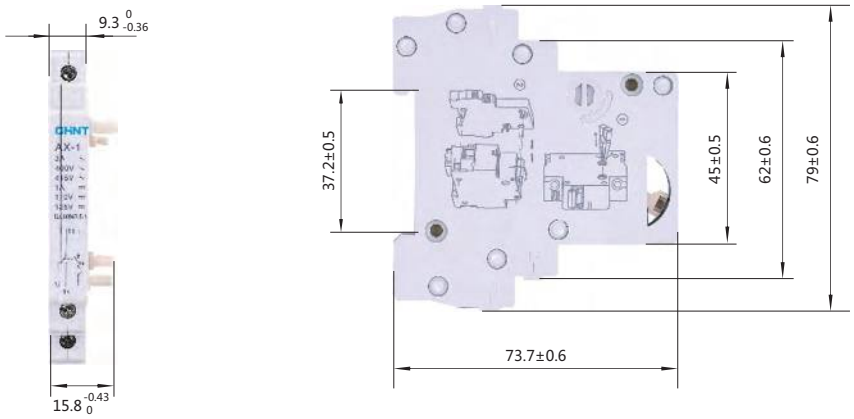

«Электро-Профи» - www.ep.ru



AX-5
Auxiliary Contact

1. Scope of Application

AX-5 auxiliary contact is mainly used in the circuit of AC 50/60Hz, rated heating current 6A, rated voltage AC 415V or DC 130V; assembled with NL1, it is used for distant circuit breaker on/off signal indication.

Conforming standard: GB/T 14048.5 , IEC 60947-5-1, accredited through CE certification.

2. Model and Meanings

AX - 5

Design No

Auxiliary contact

CE

3. Main Parameters and Technical Performance

3.1 Rated working current under different rated voltages

AC-12: AC415V/3A, AC240V/6A

DC-12: DC130V/1A, DC48V/2A, DC24V/6A

3.2 Life

The working life of auxiliary contact is not lower than 10,000 operations.

4. Main Parameters and Technical Performance

4.1Ambient temperature:-35 ºC ~+70 ºC

4.2 The atmosphere condition:≤95%

4.3 Pollution degree: II

4.4 Altitude: ≤2000m

Figure 1 wiring diagram

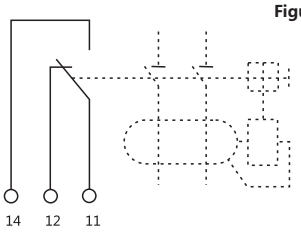

5. Product assembly and installation

5.1 AX-5 auxiliary contact is a kind of accessories, and can only function after being assembled with the NL1. The assembly and disassembly diagrams are shown below.

Figure 2

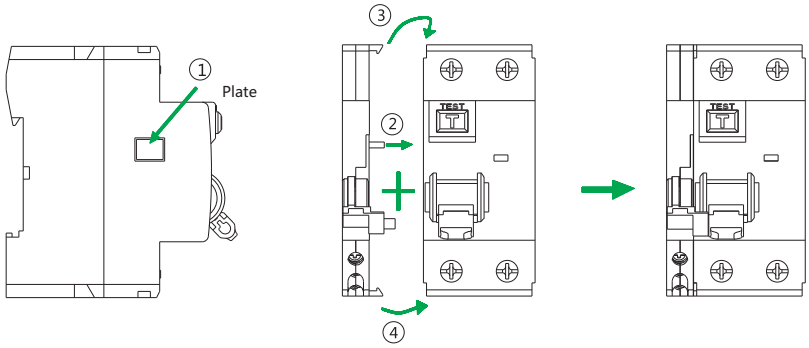

«Электро-Профи» - www.ep.ru

A

5.2 Remove left cover plate of circuit breaker

6. overall and mounting Dimensions (mm)

Figure 3

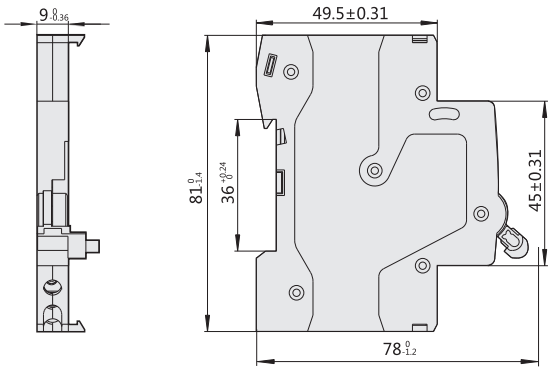

7. Ordering information

7.2 Types and names of product, for example， AX-5 auxiliary contact.

7.2 Quantity on order，for example，50u nits.

7.3 Example for ordering: AX-5 auxiliary contact, 50units

«Электро-Профи» - www.ep.ru



OUVR-1 Self-recovery Overvoltage and Undervoltage Protector

1. Product Features

1.1 Preventing misoperation: Where sudden transient or temporary overvoltage occurs in the line, the protector will not generate misoperation; when the line suffers instable voltage or sudden power recovery after sudden power disruption due to loose contact or other fault, the protector will not close the circuit;

1.2 Reliable operation: Protection is characterized by inverse time lag operation with operating time≤1s;

1.3 Wide scope of voltage protection: 0~450V; in case of maximum fault voltage upon line fault, the protector itself will not be damaged;

1.4 Safer, impulse withstand voltage: 4kV (conforming to the safety standard of category Ⅲ electrical apparatus);

1.5 Condition indication: The protector has the LED to indicate the operating state, where green is normal voltage indication, and red is overvoltage or undervoltage indication;

1.6 External modular design, guiderail DIN rail mounting.

2. Scope of Application

OUVR-1self-recovery overvoltage and undervoltage protector is a new type of intelligent protection apparatus. With the modular standard design, in case of the overvoltage or undervoltage of power supply line, the protector can quickly and safely break the circuit under continuous high voltage surge, avoiding the happening of an accident due to abnormal voltage entry into the terminal apparatus; when voltage resumes normal value, the protector will automatically close the circuit within the specified time to ensure the terminal apparatus can operate normally in an unattended way.

OUVR-1self-recovery overvoltage and undervoltage protector is applied for the users or loads of AC 230/400V, 50Hz and rated operating current 80A and below. It is mainly used in the household distribution box or other distribution line requiring protection.

3. Model and Meanings

OUVR- 1 80A 3P+N bottom entry and upper exit

- bottom entry and upper exit: Mode of connection: upper entry and lower bottom exit, lower bottom entry and upper exit
- 3P+N: Number of poles: 1P+N, 3P+N
- 80A: Rated current: 32A, 40A, 50A, 63A, 80A
- 1: Design No.
- OUVR-: Self-recovery overvoltage and undervoltage protector

«Электро-Профи» - www.ep.ru

A

4. Normal Operating Conditions and Mounting Conditions

4.1 Ambient temperature: -20℃~+65℃

4.2 Altitude: ≤3000M

4.3 Atmospheric conditions: The atmospheric relative humidity is not more than 50% when the ambient air temperature is +40℃; high relative humidity is permitted under low temperature. For example, it may be up to 90% at +20℃; special measures should be taken in case of occasional condensation due to temperature variation;

4.4 Pollution degree: level 2;

4.5 Mounting category: category Ⅱ or Ⅲ.

4.6 Mounting form: It is installed using the TH35-7.5 section steel mounting rail. The inclination of installing surface and vertical plane cannot exceed 5°.

5. Points for Attention

5.1 When the protector is energized for the first time, it needs a time delay of 30±10s before normal power supply of loads.

5.2 Protector conductor N is neutral line, L is live line; connection cannot be done in a wrong way;

5.3 Mode of connection is upper entry and bottom exit;

5.4 Before use, please tighten the clamping screws to prevent the damage of the product due to loose contact.

5.5 LED indication: green lamp normally on–normal

Red lamp normally on–overvoltage or undervolage

5.6 neutral line must be connected. When the neutral lineor any phase of live conductor is disconnected in the line, the protector will play a role of protection.

5.7 After overvoltage or undervoltage of a 3P+N product, it can only resume normal operation when the voltage of three phases to neutral line is within the range of recovery value.

6. Main Parameters and Technical Indices

6.1 Rated voltage: AC230V/400V, 50Hz

6.2 Rated operating current: 32A, 40A, 50A, 63A, 80A

6.3 Overvoltage operation cutoff value: 270V±5V

6.4 Overvoltage recovery value: 240~260V

6.5 Undervoltage operation cutoff value: 170±5V

6.6 Undervoltage recovery value: 185~195V

6.7 Time delay close time: 30±10s

6.8 Electric mechanical life: >50,000 operations

6.9 Power consumption: <2W

6.10 Connection capacity: <25mm2

6.11 Number of poles: 1P+N, 3P+N

6.12 Mode of connection: upper entry and lower bottom exit, lower bottom entry and upper exit

7. Installation and Connection

7.1 Before installation, it should first check whether the product mark conforms to the use conditions.

7.2 Connection should be done according to the product marked entry and exit (The load current cannot be higher than the product rated current).

7.3 Pole N cannot be connected in a wrong way, and it must be reliably connected; otherwise, the protector cannot operate normally.

7.4 For the connecting conductor section area, refer to Table 1.

Table 1 Section Area and Rated Current of Connecting Conductor

Rated current A	32	40	50	63	80
Conductor section area mm^2	6	10	10	16	25

«Электро-Профи» - www.ep.ru

8. Outline and Installing Dimensions

1P+N

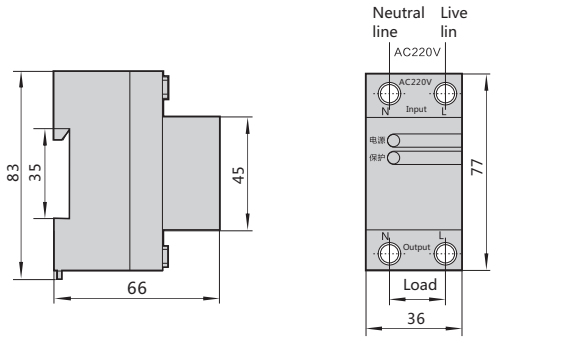

Upper Entry and Bottom Exit Connection Diagram

3P+N

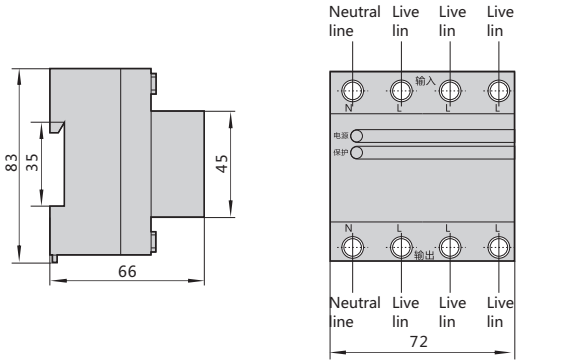

Upper Entry and Bottom Exit Connection Diagram

1P+N

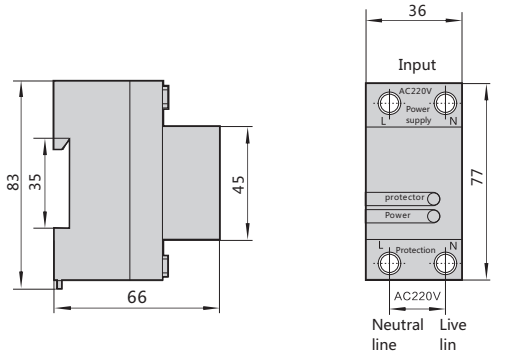

Bottom Entry and Upper Exit Connection Diagram

3P+N

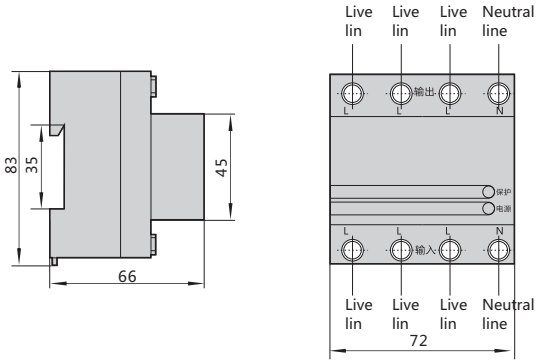

Bottom Entry and Upper Exit Connection Diagram

9. Ordering information

When ordering the goods,the user must shall indicate the product name, type, number of poles, rated voltage, rated current and order quantity:

Order example: To order OUVR-1 self-recovery overvoltage and undervoltage protector, 1P+N, upper entry and lower exit, rated voltage 230V, rated current 40A, quantity: 1000units:

Please indicate: OUVR-1 40A 1P+N upper entry and lower bottom exit 230V 1000units.

«Электро-Профи» - www.ep.ru

A



OUVR-2 Self-recovery Overvoltage and Undervoltage Protector

1. Product Features

1.1 Preventing misoperation: Where sudden transient or temporary overvoltage occurs in the line, the protector will not generate misoperation; when the line suffers instable voltage or sudden power recovery after sudden power disruption due to loose contact or other fault, the protector will not close the circuit;

1.2 Reliable operation: Protection is characterized by inverse time lag operation with operating time≤1s;

1.3 Wide scope of voltage protection: 0~450V; in case of maximum fault voltage, the protector itself will not be damaged;

Safer, impulse withstand voltage: 4kV (conforming to the safety standard of category Ⅲ electrical apparatus);

1.4 Condition indication: The protector has the LED to indicate the operating state, where green is normal voltage indication, and red is overvoltage or under voltage indication;

1.5 The product is easy for installation with cable from bottom feed;

1.6 The product only has 27mm with small size;

1.7 External modular design, DIN rail mounting.

2. Scope of Application

2.1 OUVR-2 self-recovery overvoltage and undervoltage protector is a new type of intelligent protection apparatus. With the modular standard design, in case of overvoltage or undervoltage of power supply line, the protector can quickly and safely break the circuit under continuous high voltage surge, avoiding the happening of an accident due to abnormal voltage entry into the terminal apparatus; when voltage resumes normal value, the protector will automatically close the circuit within the specified time to ensure the terminal apparatus can operate normally in an unattended way.

2.2 OUVR-2 self-recovery overvoltage and undervoltage protector is applied for the users or loads of AC 230V, 50Hz and rated operating current 80A and below. It is mainly used in the household distribution box or other distribution line requiring protection.

«Электро-Профи» - www.ep.ru

3. Model and Meanings

OUVR- 2 80A 1P+N

- 1P+N — Number of poles: 1P+N, 3P+N
- 80A — Rated current: 32A, 40A, 50A, 63A, 80A
- 2 — Design No.
- OUVR — Self-recovery overvoltage and undervoltage protector

4. Normal Operating Conditions and Mounting Conditions

4.1 Ambient temperature: -35℃~+70℃

4.2 Altitude: ≤3000M

4.3 Atmospheric conditions: The atmospheric relative humidity is not more than 50% when the ambient air temperature is +40℃; high relative humidity is permitted under low temperature. For example, it may be up to 90% at +20℃; special measures should be taken in case of occasional condensation due to temperature variation;

4.4 Pollution degree: level 2;

4.5 Mounting category: category Ⅱ or Ⅲ.

4.6 Mounting form: It is installed using the TH35-7.5 section steel mounting rail. The inclination of installing surface and vertical plane cannot exceed 5°.

5. Points for Attention

5.1 When the protector is energized for the first time, it needs a time delay of 30±10s before normal power supply of loads.

5.2 Protector conductor N is neutral line, L is live line; connection cannot be done in a wrong way;

5.3 Mode of connection is lower bottom entry and upper exit; bottom entry and l bottom exit; l bottom entry, upper/bottom exit;

5.4 Before use, please tighten the clamping screws to prevent the damage of the product due to loose contact.

5.5 LED indication: green lamp normally on–normal

Red lamp normally on–overvoltage or undervolage

5.6 Neutral line must be connected. When the Neutral line is disconnected, the protector will play a role of protection.

6. Main Parameters and Technical Indices

6.1 Rated voltage : 230V 50Hz

6.2 Rated operating current: 32A, 40A, 50A, 63A, 80A

6.3 Overvoltage operation cutoff value: 275V>>

6.4 Undervoltage operation cutoff value: 161V<<

6.5 Recovery value: 196V~253V

6.6 Time delay close time: 30s±10s

6.7 Electric mechanical life: >50,000 operations

6.8 Power consumption: <2W

6.9 Connection capacity: <25mm^2

«Электро-Профи» - www.ep.ru

A

7. Installation and Connection

7.1 Before installation, it should first check whether the product mark conforms to the use conditions.

7.2 Connection should be done according to the product marked entry and exit (The load current cannot be higher than the product rated current).

7.3 Pole N cannot be connected in a wrong way, and it must be reliably connected; otherwise, the protector cannot operate normally.

For the connecting conductor section area, refer to Table 1.

Table 1 Section Area and Rated Current of Connecting Conductor

Rated current A	32	40	50	63	80
Conductor section area mm^2	6	10	10	16	25

8. Overall and mounting dimensions(mm)

Fig.1 Overall and mounting dimensions(mm)

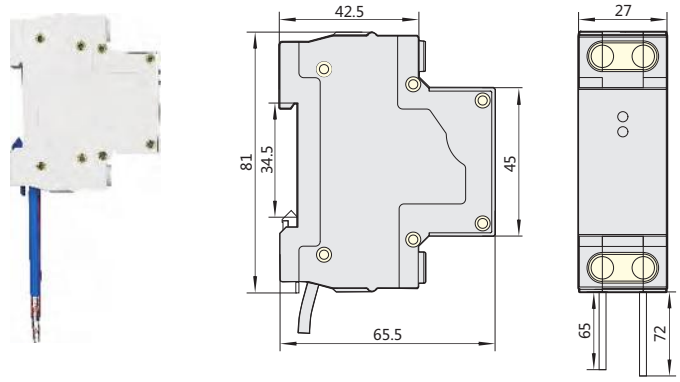

9. Mode of connection

Fig.1 Mode of Connection

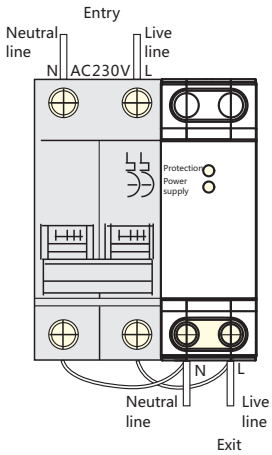

Bottom Entry and Bottom Exit Connection Diagram

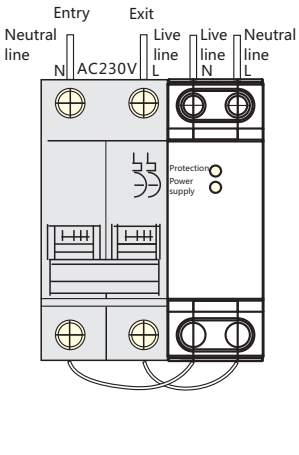

Bottom Entry and Upper Exit Connection Diagram

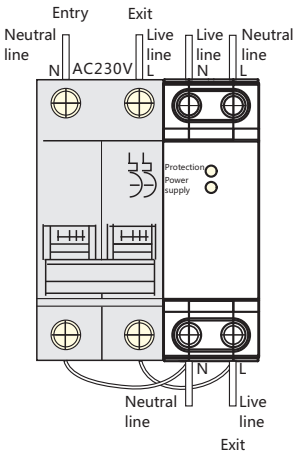

Bottom Entry/Upper and Bottom Exit Connection Diagram

10. Ordering information

10.1 When ordering the goods,the user must shall indicate the product name, type, number of poles, rated voltage, rated current and order quantity:

10.2Order example: To order OUVR-2 self-recovery overvoltage and undervoltage protector, 1P+N, rated voltage 230V, rated current 40A, quantity: 1000units:

10.3Please indicate: OUVR-2 1P+N 230V 40A lower bottom entry and upper exit 1000units.

«Электро-Профи» - www.ep.ru



NH2 Switch Disconnector

1. General

1. 1 In the open position, It complies with the requirements of the isolating function.

1.2 It is designed match DZ series MCBs/RCBOs.

1.3 Approvals and certificates
Detailed information, please refer to Certificates Table on the last page.

2. Technical data

	Standard		IEC/EN 60947-3
Electrical features	Rated voltage Ue	V	230/400
	Rated current Ie	A	32, 63, 100,125
	Rated frequency	Hz	50/60
	Rated impulse withstand voltage (1.2/50)Uimp	V	4,000
	Rated short-time withstand current Icw		12Ie, 1s
	Rated making and breaking capacity		3Ie, 1.05Ue, cosΦ=0.65
	Rated short circuit making capacity		20Ie, t=0.1s
	Dielectric test voltage at ind. Freq. for 5s	kV	1.89
	Insulation voltage Ui	V	500
	Pollution degree		2
	Uilization category		AC-22A
Mechanical features	Electrical life		1,500
	Mechanical life		8,500
	Protection degree		IP20
	Ambient temperature (with daily average≤35℃)	℃	-5...+40
	Storage temperature	℃	-25...+70
Installation	Terminal connection type		Cable/Pin-type busbar
	Terminal size top/bottom for cable	mm^2	50
		AWG	18-2
	Terminal size top/bottom for busbar	mm^2	25
		AWG	18-3
	Tightening torque	N·m	2.5
		In-Ibs.	22
	Connection		From top and bottom

Rated current	Screw size	Tightening torque	Copper cross-sectional area
32A, 63A	M5	2.0 N.m	32A: $6mm^2$; 63A: 16 mm^2
100A, 125A	M7	3.5N.m	100A: $35mm^2$; 125A: 50 mm^2

«Электро-Профи» - www.ep.ru

A

3. Overall and mounting dimensions (mm)

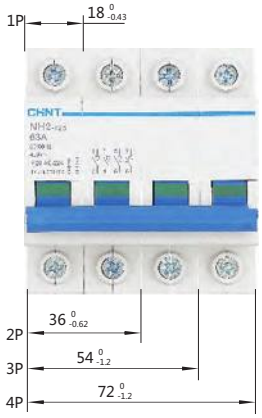

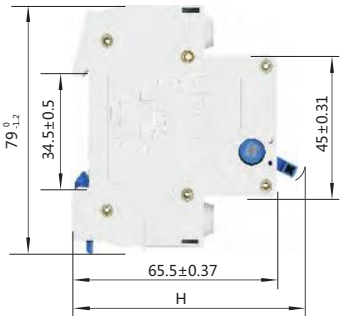

Poles	1P	2P~4P
H (mm)	74 0 -1.2	77 0 -1.2

«Электро-Профи» - www.ep.ru



NH4 Switch Disconnector

1. General

1.1 In the open position, It complies with the requirements of the isolating function.

1.2 It is designed match NB series MCBs/RCBOs.

1.3 Approvals and certificates
Detailed information, please refer to Certificates Table on the last page.

2. Technical data

	Standard		IEC/EN 60947-3
Electrical features	Rated voltage Ue	V	240/415
	Rated current Ie	A	32, 40, 63, 80, 100, 125
	Rated frequency	Hz	50/60
	Rated impulse withstand voltage (1.2/50)Uimp	V	4,000
	Rated short-time withstand current Icw		12Ie, 1s
	Rated making and breaking capacity		3Ie, 1.05Ue, cosΦ=0.65
	Rated short circuit making capacity		20Ie, t=0.1s
	Dielectric test voltage at ind. Freq. for 5s	kV	1.89
	Insulation voltage Ui	V	500
	Pollution degree		2
	Uilization category		AC-22A
Mechanical features	Electrical life		1,500
	Mechanical life		8,500
	Protection degree		IP20
	Ambient temperature (with daily average≤35℃)	℃	-5...+40
	Storage temperature	℃	-25...+70
Installation	Terminal connection type		Cable/Pin-type busbar/U-type busbar
	Terminal size top/bottom for cable	mm^2	50
		AWG	18-1/0
	Terminal size top/bottom for busbar	mm^2	35
		AWG	18-2
	Tightening torque	N·m	2.5
		In-Ibs.	22
	Connection		From top and bottom

«Электро-Профи» - www.ep.ru

A

3. Overall and mounting dimensions (mm)



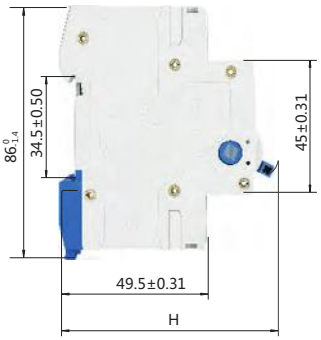

Number of poles	1P	2P~4P
H (mm)	74 0 -1.2	77 0 -1.2

«Электро-Профи» - www.ep.ru



NZK1-32 Change-over Switch

1. General

1.1 Certificates: KEMA;

1.2 Electric ratings: AC 50/60Hz;
rated voltage up to 250V, rated current 32A;

1.3 Standard: IEC60669-1

2. Operating conditions

2.1 Temperature:-5℃~+40℃;
the average value shall not exceed +35℃

2.2 Altitude: ≤2000m;

2.3 Air conditions:
At mounting site, relative humidity not exceed 50% at the max temperature of +40℃, higher relative humidity is allowable under lower temperature. For example, RH could be 90% at +20℃, special measures should be taken to occurrence of dews.

2.4 Mounting conditions:
Inclination between the mounting plane and the vertical plane should not exceed ±5°

2.5 Assemble with TH35-7.5 steel mounting rail

3. Type designation

NZK1-32

- Rated current of frame size (A)
- Design SN (1: Three-way switch)
- Change-over Switch
- Corporate Characteristic Code

4. Technicall data

4.1 Poles: 1P, 2P

4.2 Rated frequency: 50Hz/60Hz;

4.3 Rated operating current Ie: 32A;

4.4 Rated voltage Ue: 250V;

4.5 Rated making and breaking capacity:
1.1Ue; 1.25Ie; COSΦ=0.3±0.05; 200 times

4.6 Operational performance:
$Ue_0^{+5\%}$; Ie; COSΦ=0.6±0.05; 10000 times

«Электро-Профи» - www.ep.ru

A

5. Circuit diagram

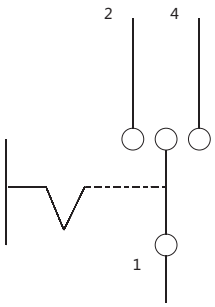

NZK1-32/1

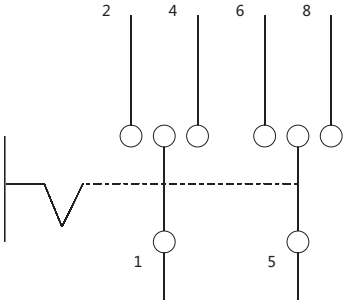

NZK1-32/2

6. Overall and mounting dimensions (mm)

Mounting Rail Dimensions



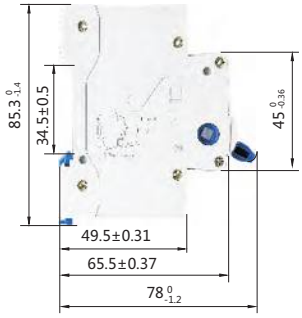

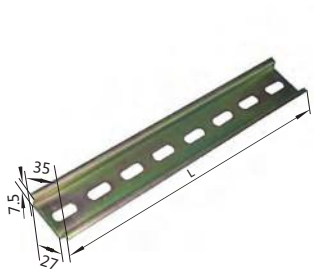

7. Installation and usage

7.1 Prior to installation, check whether the switch symbol complies with the operating conditions.

7.2 As shown, snap into the mounting rail.
Contact 1-2 is closed when the handle is at position I, and contact 1-2, 1-4 are opened when the handle is at position "O", contact 1-4 is closed when the handle is at position Ⅱ.

7.3 Before turning the power ON,
operate the switch several times to ensure that it is flexible and reliable, without any delay.

7.4 The switch must be protected against rain during usage, storage and transportation, etc.

8. Ordering information

8.1 Indicate the following order information:
a) Product model and name, e.g. Change-over switch NZK1-32
b) Number of poles, e.g. 2P
c) Quantity of order, e.g. 100 units

8.2 Example:
e.g. Change-over switch NZK1-32/2 100 units

«Электро-Профи» - www.ep.ru



NZK2-32 Change-over Switch

1. General

1.1 Certificates: KEMA;

1.2 Electric ratings: AC 50/60Hz;
rated voltage up to 250V, rated current 32A;

1.3 Standard: IEC60669-1

2. Operating conditions

2.1 Temperature:-5℃~+40℃;
the average value shall not exceed +35℃

2.2 Altitude: ≤2000m;

2.3 Air conditions:
At mounting site, relative humidity not exceed 50% at the max temperature of +40℃, higher relative humidity is allowable under lower temperature. For example, RH could be 90% at +20℃, special measures should be taken to occurrence of dews.

2.4 Mounting conditions:
Inclination between the mounting plane and the vertical plane should not exceed ±5°

2.5 Assemble with TH35-7.5 steel mounting rail

3. Type designation

NZK2-32

- Rated current of frame size (A)
- Design SN (2: Two-way switch)
- Change-over Switch
- Corporate Characteristic Code

4. Technicall data

4.1 Poles: 1P, 2P

4.2 Rated frequency: 50Hz/60Hz;

4.3 Rated operating current Ie: 32A;

4.4 Rated voltage Ue: 250V;

4.5 Rated making and breaking capacity:
1.1Ue; 1.25Ie; COSΦ=0.3±0.05; 200 times

4.6 Operational performance:
$Ue_0^{+5\%}$; Ie; COSΦ=0.6±0.05; 10000 times

«Электро-Профи» - www.ep.ru

A

5. Circuit diagram

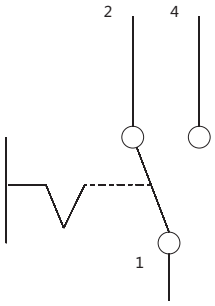

NZK2-32/1

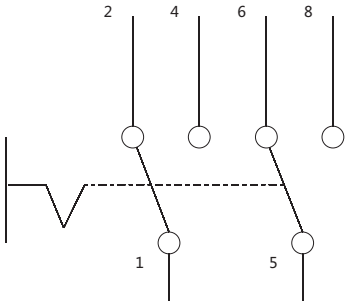

NZK2-32/2

6. Overall and mounting dimensions (mm)

Mounting Rail Dimensions

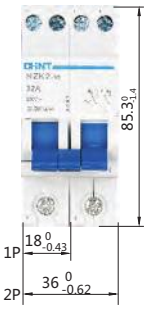

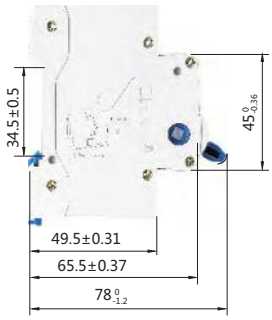

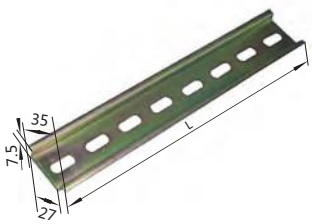

7. Installation and usage

7.1 Prior to installation, check whether the switch symbol complies with the operating conditions.

7.2 As shown, snap into the mounting rail.
Contact 1-2 is closed when the handle is at position I, and contact 1-4 is opened, contact 1-4 is closed when the handle is at position Ⅱ, and contact 1-2 is opened.

7.3 Before turning the power ON, operate the switch several times to ensure that it is flexible and reliable, without any delay.

7.4 The switch must be protected against rain during usage, storage and transportation, etc.

8. Ordering information

8.1 Indicate the following order information:
a) Product model and name, e.g. Change-over switch NZK2-32
b) Number of poles, e.g. 2P
c) Quantity of order, e.g. 100 units

8.2 Example:
e.g. Change-over switch NZK2-32/2 100 units

«Электро-Профи» - www.ep.ru



NU6-Ⅱ
Low-voltage Surge Arrester

1. General

1.1 Certificates: international certificates are under proceeding;

1.2 Number of poles: 1, 2,3, 4;

1.3 Electric ratings: 230/400V, AC50Hz;

1.4 Application: Protect electric system and on-loading electrical apparatus from thunder and instantaneous over-voltage;

1.5 Standard: IEC 61643-1, EN 61643-11

CE

2. Technical data

Model	Max. continuous operational voltage Uc (V~)	Level of protection Up (kV)	Maximum discharge current Imax (8/20μs) (kA)	Nominal discharge current In (8/20μs) (kA)	Mounting category of protected apparatus
NU6-Ⅱ	385	1.8	40	15	Ⅱ, Ⅲ
	460	2.0			Ⅱ, Ⅲ
NU6-Ⅱ	385	1.8	60	25	Ⅱ, Ⅲ
	460	2.0			Ⅱ, Ⅲ
NU6-Ⅱ	385	1.8	100	40	Ⅱ, Ⅲ
	460	2.0			Ⅲ

Auxiliary	Configurations	Rated voltage Un(V)	Rated current In(A)
contact	INO+INC	AC125	3

3. How to select surge protectors

a. The voltage should be ≤Uc;
b. Up < maximum impulse withstands;
c. Different protectors should be selected
according to various grounding system and protection mode.

Model	Max. continuous operational voltage Uc (V~)	Applicable grounding system	Protection mode	Circuits	Number of poles
NU6-Ⅱ	385	TN-S	L-PE, N-PE, L-N	1 phase, 3 phase 5 wire	1,2,3,4
		TN-C	L-PE	1 phase, 3 phase 4 wire	1,2,3
		TT	L-PE, N-PE, L-N, L-L	1 phase, 3 phase 4 wire	1,2,3,4
	460	TN-S	L-PE, N-PE, L-N, L-L	1 phase, 3 phase 5 wire	1,2,3,4
		TN-C	L-PE, L-L	1 phase, 3 phase 4 wire	1,2,3
		IT	L-PE, N-PE, L-L	1 phase, 3 phase 3 /4 wire	1,2,3,4
		TT	L-PE, N-PE, L-N, L-L	1 phase, 3 phase 4 wire	1,2,3,4

«Электро-Профи» - www.ep.ru

A

4. Functions

4.1 The product is composed of two independent components: removable protective module 4 and base 2;

4.2 When the product is damaged, the part 3 will indicate; please replace the removable protective module 4 at once and there is no need to cutoff the circuits;

4.3 The part 1 is for maximum continuous operational voltage indication as well as avoiding replacement with wrong module.

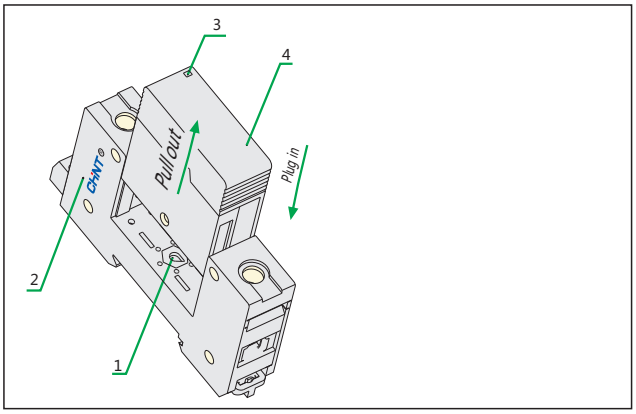

NU6-Ⅱ/F (40, 60kA) with remote control port

5. Overall and mounting dimensions (mm)

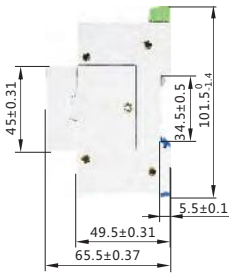



Auxiliary contact

NU6-Ⅱ (40, 60kA) without remote control port

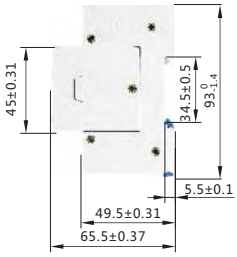

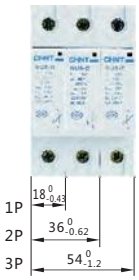

NU6-Ⅱ/F (100kA) with remote control port

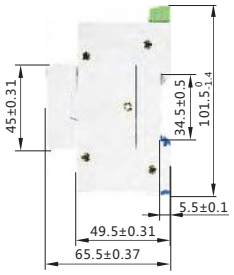

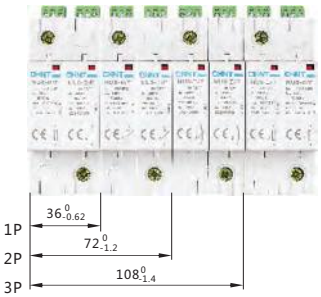

Auxiliary contact

NU6-Ⅱ/F (100kA) without remote control port

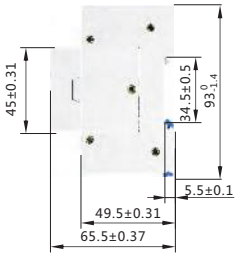

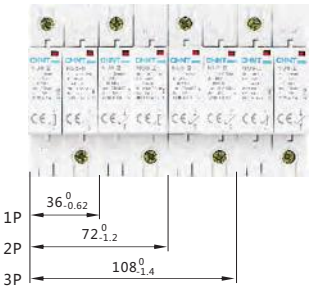

«Электро-Профи» - www.ep.ru



NU6-Ⅲ
Low-voltage Surge Arrester

1. General

1.1 Certificates: international certificates are under proceeding;

1.2 Electric ratings: Single phase power distribution and control system of AC50Hz, 230V;

1.3 Short circuit current: up to 5kA (8/20μs);

1.4 Application: Protect electric system and on-loading electrical apparatus from lightening and instantaneous over-voltage;

1.5 Standard：IEC61643-1, EN61643-11

CE

2. Technical data

Model	Uoc (1.2/50μs) (kV)	Short circuit current Isc (8/20us)(KA)	Max. continuous operational voltage Uc (V~)	Level of protection Up (kV)
NU6-Ⅲ	10	5	275	1.5
			320	1.5
			385	1.5

Auxiliary	Configurations	Rated voltage Un(V)	Rated current In(A)
contact	INO+INC	AC125	3

3. Type and circuit diagram

Model	Type		Circuit diagram	
NU6-Ⅲ	1P+N	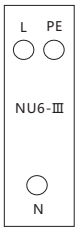	Compound Type	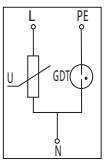
	2P	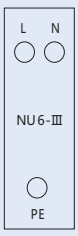	Compound Type	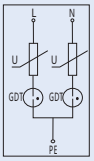

«Электро-Профи» - www.ep.ru

4. Design type and protective mode of different surge protectors

Model	Uoc (1.2/50μs) (kV)	Uc (V~)	Corresponding design type and protection mode
NU6-Ⅲ	10	275	Compound type (with gasdischarge tube + voltage sensitive resistance) L-N/N-PE
		320 385	Compound type (with gas discharge tube + voltage sensitive resistance) L-PE/N-PE

5. Functions

5.1 The product is composed of two independent components: removable protective module 4 and base 2;

5.2 When the product is damaged, the part 3 will indicate; please replace the removable protective module 4 at once and there is no need to cutoff the circuits;

5.3 The part 1 is for maximum continuous operational voltage indication as well as avoiding replacement with wrong module.

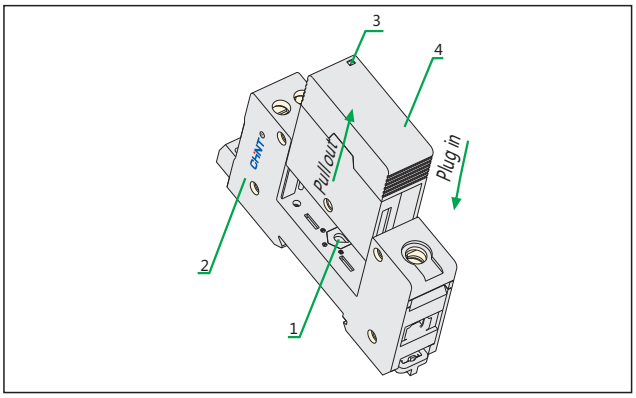

NU6-Ⅲ/F with remote control port

6. Overall and mounting dimensions (mm)

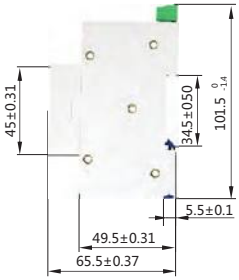



Auxiliary contact

NU6-Ⅲ without remote control port

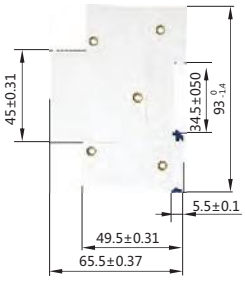

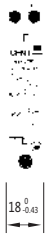



«Электро-Профи» - www.ep.ru

NU6-Ⅱ series surge arrestor	NU6-Ⅲ series surge arrestor
The boundary between lightning protection areas of LPZ1 & LPZ2	The boundary between lightning protection areas of LPZ2 & LPZ3
Protection category: C	Protection category: D
Over-voltage mounting category: Ⅱ	Over-voltage mounting category: Ⅰ
Rated impulse withstand voltage: 2500V	Rated impulse withstand voltage: 1500V
Parameters of discharge: Imax and In	Parameters of discharge: Uoc and Isc
Applicable to branch power distribution switchgear	Applicable to terminal of power distribution





*Note: Fuse/Circuit breaker are strongly recommended to be installed upstream the surge protector.

7. Recommended circuit breaker selection

Surge protector	Maximum discharge current (kA)	Fuse or circuit breaker (upstream)
NU6-Ⅱ	40	gL/gG 125A
	60	gL/gG 160A
	100	gL/gG 250A
NU6-Ⅲ	ALL	NB1 C10

«Электро-Профи» - www.ep.ru

A



NP9 Pushbutton

1. General

1.1 Electric ratings: 230V, AC50/60Hz;

1.2 Utilization category: AC-14;

1.3 Rated conventional heating current Ith: 16A;

1.4 Rated operational current Ie: 6A;

1.5 Rated insulation voltage Ui: 500V;

1.6 Protection grade: IP20;

1.7 Standard: IEC/EN 60947-5-1;

CE

2. Operating conditions

2.1 Ambient temperature: -5℃~+40℃,
average temperature in 24 hours not exceed +35℃;

2.2 Altitude: ≤ 2000m;

2.3 Air conditions:
At mounting site, relative humidity
not exceed 50% at the max temperature of +40℃,
higher relative humidity is allowable under lower
temperature. For example, RH could be 90% at +20℃.
Special measures should be taken to occurrence of dews;

2.4 Mounting category: Ⅱ, Ⅲ;

2.5 Pollution grade: Ⅱ;

2.6 Mounting mode: TH35-7.5 standard rail,
inclination between mounting and vertical plane
not exceed 5°.

3. Technical data

3.1 Life (operations):
a. Electric life : 100,000
b. Mechanical life : 250,000

3.2 Assembly of contact: 1NC+2NO, 2NC+1NO, 3NO,
2NC+2NO(Not available for illuminated type)

3.3 Technical data of signal lamp
a. Rated operational voltage: AC/DC6.3V, AC/DC12V,
AC/DC24V, AC/DC110V, AC/DC230V
b. Rated operational current: ≤20mA

3.4 Life: LED≥30000h

4. Overall and mounting dimensions (mm)

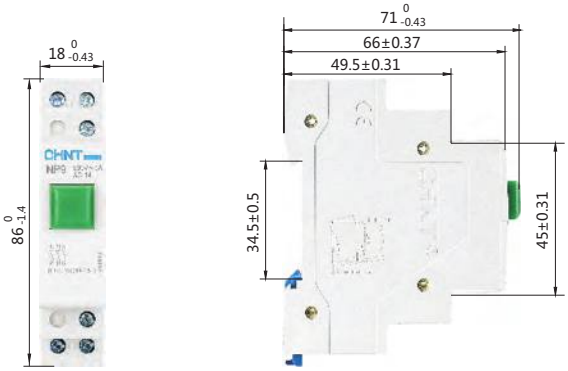

«Электро-Профи» - www.ep.ru



ND9 Indicator Light

1. General

1.1 Electric ratings: 230V, AC50/60Hz;

1.2 Rated insulation voltage Ui: 500V;

1.3 Protection grade: IP20

1.4 Rated operational current: ≤20mA

1.5 Life: LED≥30000h;

1.6 Standard: IEC/EN 60947-5-1

2. Operating Conditions

2.1 Ambient temperature: -5℃~+40℃,
average temperature in 24 hours not exceed +35℃;

2.2 Altitude: ≤ 2000m;

2.3 Air conditions:
At mounting site, relative humidity not exceed 50% at the max temperature of +40℃, higher relative humidity is allowable under lower temperature. For example, RH could be 90% at +20℃. Special measures should be taken to occurrence of dews;

2.4 Mounting category: Ⅱ, Ⅲ;

2.5 Pollution grade: Ⅱ;

2.6 Mounting mode: TH35-7.5 standard rail, inclination between mounting and vertical plane not exceed 5°

3. Wirng

Cross section area of the conductor is 1.0mm^2, and tightening torque should be 0.8N•m

CE

4. Overall and mounting dimensions (mm)

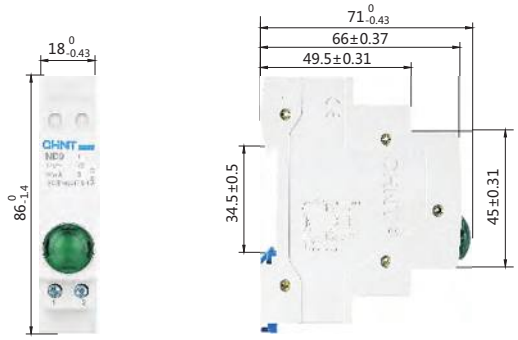

«Электро-Профи» - www.ep.ru

A



NX8 Consumer Unit (Body)

1. General

1.1 Electric ratings: up to 100A, 230V, AC50/60Hz;

1.2 No. Of mounted units: 5, 6, 8, 12, 15, 20, 24;

1.3 On-load current (A): 100/1-phase;

1.4 Protection degree: IP30;

1.5 Standard: IEC61439-3(EN60670-24)

2. Features

2.1 The window of the consumer unit is designed with novel appearance and convenient operation. Open and close operation is flexible, and self-locking at the open status;

2.2 Inside the product, there is a neon indicator light to indicate status of power supply; having a elegant appearance and clear indication;

2.3 The interiorly mounted MCBs are all in compliance with relative IEC standards, 9mm modularized electric components are applicable, as well;

2.4 On request, various circuit combinations can be assembled; and the mounting capacity of the product units can be taken to 5~24 units;

2.5 Convenient and reliable operation, having exposed handle, and all live parts to be mounted inside the wall box ;

2.6 The consumer unit is designed with internal terminal blocks for connection of neutral line and protective grounding wire.

2.7 The enclosure of the unit is made of plastic material with metal structure.

«Электро-Профи» - www.ep.ru

3. Overall and mounting dimensions (mm)

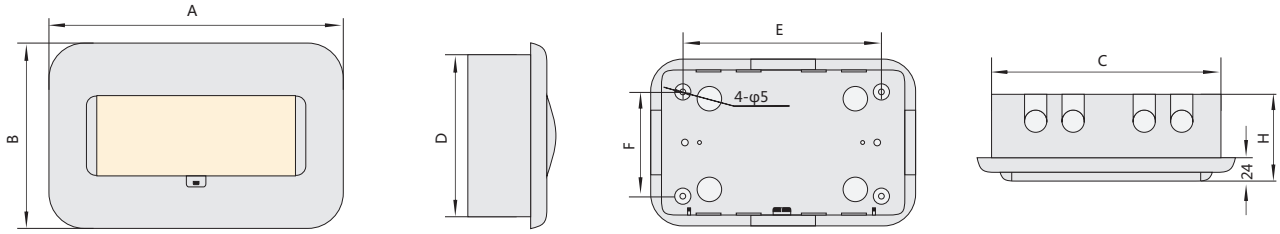

Model	A	B	C	D	E	F	H	Remark
NX8-5	184±1.45	200±1.45	164±1.25	180±1.45	114±1.1	130±1.25	105 $^{0}_{-2.2}$	Single-row
NX8-5J	184±1.45	200±1.45	166±1.25	180±1.45	114±1.1	130±1.25	105 $^{0}_{-2.2}$	Single-row
NX8-6J	202±1.45	200±1.45	182±1.25	180±1.45	132±1.1	130±1.25	105 $^{0}_{-2.2}$	Single-row
NX8-8	238±1.45	200±1.45	218±1.45	180±1.45	168±1.25	130±1.25	105 $^{0}_{-2.2}$	Single-row
NX8-8J	238±1.45	200±1.45	220±1.45	180±1.45	168±1.25	130±1.25	105 $^{0}_{-2.2}$	Single-row
NX8-12	310±1.6	200±1.45	290±1.6	180±1.45	240±1.45	130±1.25	105 $^{0}_{-2.2}$	Single-row
NX8-12J	310±1.6	200±1.45	290±1.6	180±1.45	240±1.45	130±1.25	105 $^{0}_{-2.2}$	Single-row
NX8-15	364±1.8	200±1.45	344±1.8	180±1.45	294±1.6	130±1.25	105 $^{0}_{-2.2}$	Single-row
NX8-15J	364±1.8	200±1.45	346±1.8	180±1.45	294±1.6	130±1.25	105 $^{0}_{-2.2}$	Single-row
NX8-20	274±1.6	350±1.8	254±1.6	330±1.8	204±1.45	280±1.6	105 $^{0}_{-2.2}$	Double-rows
NX8-20J	274±1.6	350±1.8	256±1.6	330±1.8	204±1.45	280±1.6	105 $^{0}_{-2.2}$	Double-rows
NX8-24	310±1.6	350±1.8	290±1.6	330±1.8	240±1.45	280±1.6	105 $^{0}_{-2.2}$	Double-rows
NX8-24J	310±1.6	350±1.8	292±1.6	330±1.8	240±1.45	280±1.6	105 $^{0}_{-2.2}$	Double-rows

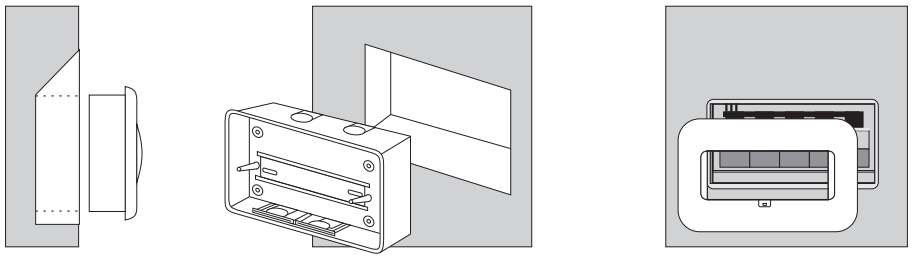

«Электро-Профи» - www.ep.ru

A



NX2 Consumer Unit (Body)

1. General

1.1 Electric ratings: up to 100A, 230V, AC50/60Hz;

1.2 No. Of mounted units: 8, 10, 14, 18, 28, 36;

1.3 On-load current (A): 100/1-phase;

1.4 Protection degree: IP30(after installation);

1.5 Standard: IEC61439-3(EN60670-24)

2. Features

2.1 The product has appearance patent.
In addition to the standard mounting rail, a front panel for fixing is supplied.
The shape fixing bolts are easy for fastening and loosening.

2.2 The interiorly mounted MCBs are in compliance with relative IEC standards, 9mm modularized electric components are available, as well.

2.3 On request, various circuits combinations can be assembled; and the mounting capacity of the product units can be taken to 8~36 units.

2.4 Convenient and reliable operation, having exposed handle, and all live parts to be mounted inside the wall box.

2.5 The consumer unit is designed with internal terminal blocks for connection of neutral line and protective grounding wire.

2.6 The enclosure of the unit is made of plastic material.

3. Overall and mounting dimensions (mm)

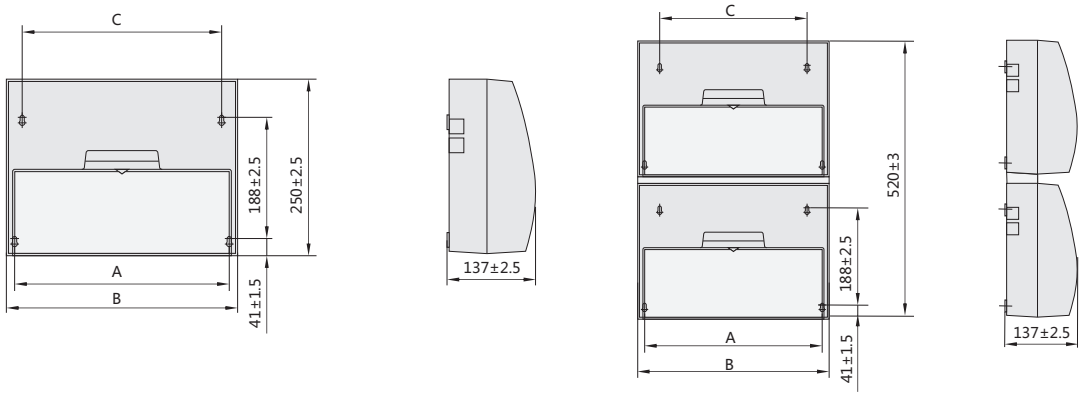

Model	A	B	C	Remark
NX2-8	194±2.5	218±2.5	144±2.5	Single-row
NX2-10	230±2.5	254±2.5	180±2.5	
NX2-14	302±2.5	326±2.5	252±2.5	
NX2-18	374±2.5	398±2.5	324±2.5	
NX2-28	302±2.5	326±2.5	252±2.5	Double-rows
NX2-36	374±2.5	398±2.5	324±2.5	

«Электро-Профи» - www.ep.ru



NXW1 Consumer Unit (NXW1 Consumer Unit Body) for Outdoor Application

1. General

1.1 Electric ratings: up to 63A, 230V, AC50/60Hz;

1.2 No. of mounted units: 3, 5;

1.3 On-load current A: 63;

1.4 Protection degree: IP65;

1.5 Standard: IEC61439-3(EN60670-24)

2. Features

2.1 Special designed with excellent enclosure capability; with high protection degree up to IP65, applicable for outdoor mounting.

2.2 The interiorly mounted MCBs are all in compliance with relative IEC standards, 9mm modularized electric components are applicable, as well;

2.3 On request, various circuit combinations can be assembled; and the mounting capacity of the product units can be taken to 3~ 5units;

2.4 Convenient and reliable operation, having exposed handle, and all live parts to be mounted inside the wall box;

2.5 The consumer unit is designed with internal terminal blocks for connection of neutral line and protective grounding wire.

2.6 The enclosure of the unit is made of plastic material.

3. Overall and mounting dimensions (mm)

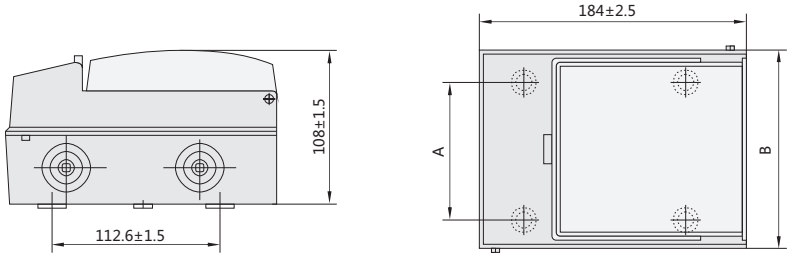

Model	A	B
NXW1-3	66.8±1.5	100±1.5
NXW1-5	102.8±1.5	136±2.5

«Электро-Профи» - www.ep.ru

A

NXW5 Wall Mounting Enclosure

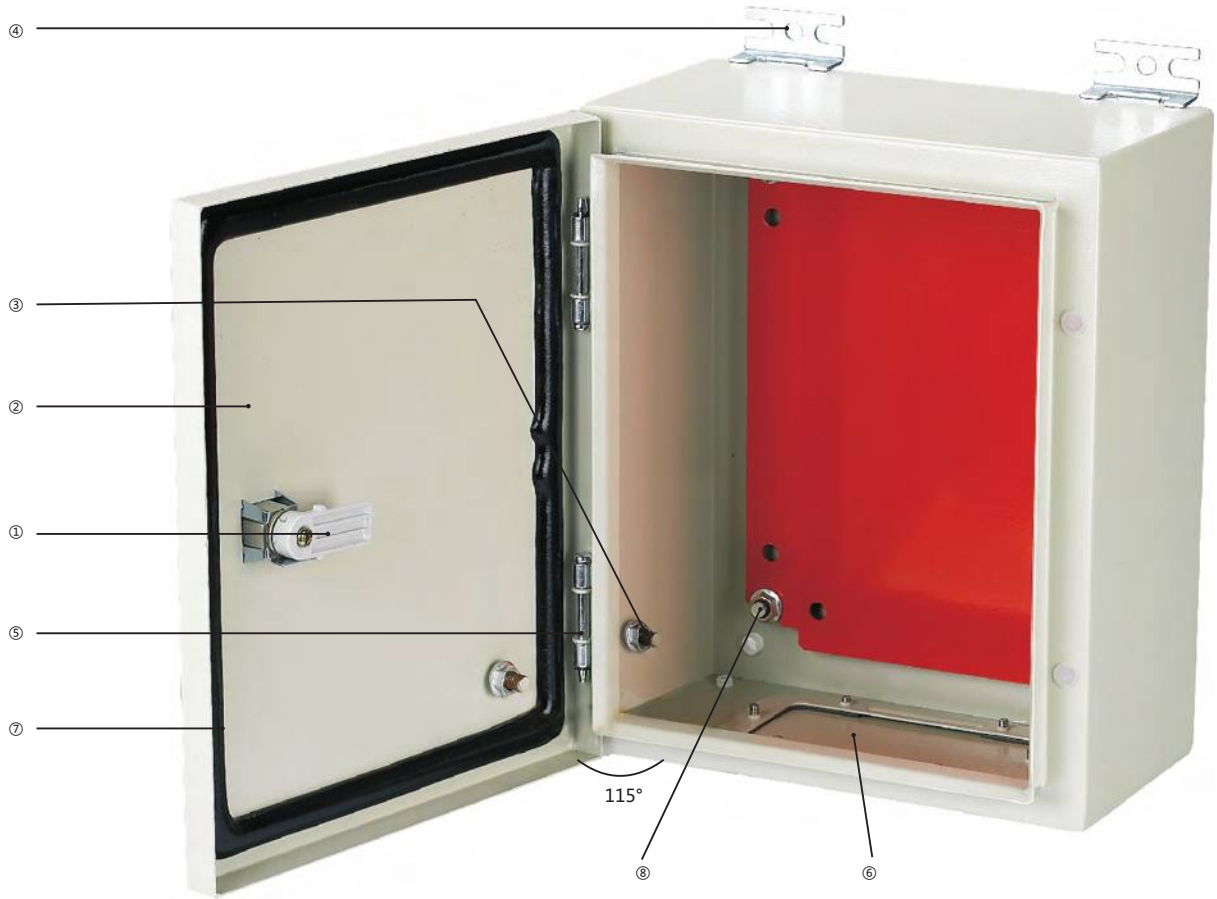

① ---- Door lock: The operated lock for preventing unwanted operation.
② ---- Panel: Zinc-plated steel panel
③ ---- Earthing studs: Earthing connection between body and door.
④ ---- Wall fixing brackets: For easy surface installation.
⑤ ---- Hinges: Hinged connection provide better operating.
⑥ ---- Flanged panel: With sealing gasket that increased cable entry capacity.
⑦ ---- Sealing rubber gasket: Make high protection degree.
⑧ ---- Studs: For additional panel.

«Электро-Профи» - www.ep.ru



NXW5 Wall Mounting Enclosure

1. General

1.1 Function

The Wall Mounting Enclosure is designed to adopt all kind of Electrical switch gear & control gear assemblies. It is suitable for variety of Electrical installations in commercial & light industrial premises. It is designed for indoor & outdoor applications.

1.2 Features

Made out of high quality Electro galvanized steel up to1.6mm thickness.
Removable Gland plate at the Bottom.
Canopies can be fixed as optional.
Also double insulation; excellent out door performance.
Mounting plate made of 2mm GI steel or RAL 2000 Orange powder coated.
Complies with IEC & NEMA standards.
Available in Double door construction for width more than 800mm.
Corner formed covers ensures better rain proof protection & aesthetic look 3 point cam lock for higher sizes ensures uniform locking over the entire length.

2. Technical data

Standard	IEC 62208
Rated voltage	230V/400V
Frequency	50/60Hz
Max. incoming current(three phases)	250A
Protection degree	IP54
Allowable temperature-rise of enclosure	70K

3. Terminals max. cable size

Incoming terminals	2×185 mm^2

4.Overall and mounting dimensions (mm)

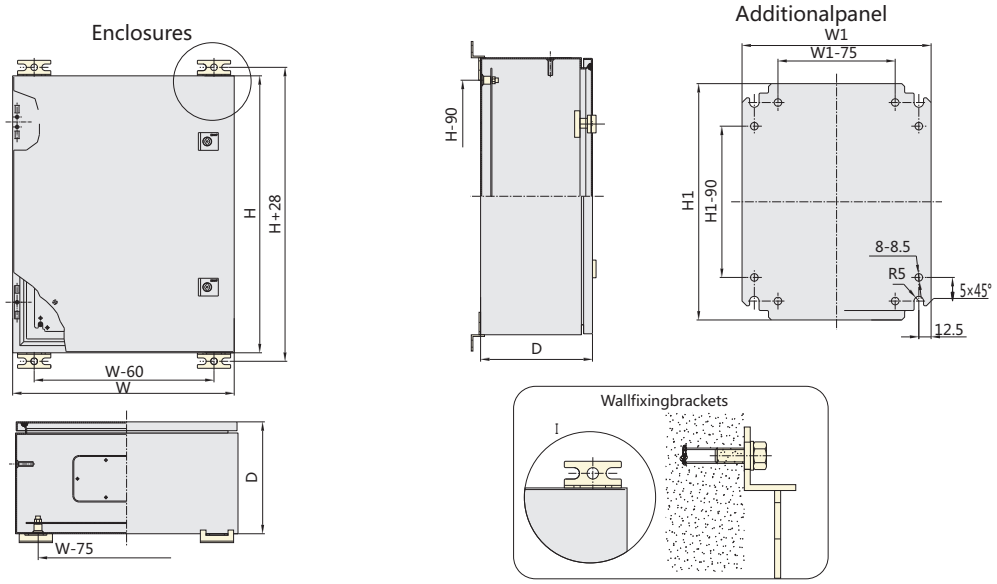

«Электро-Профи» - www.ep.ru

A

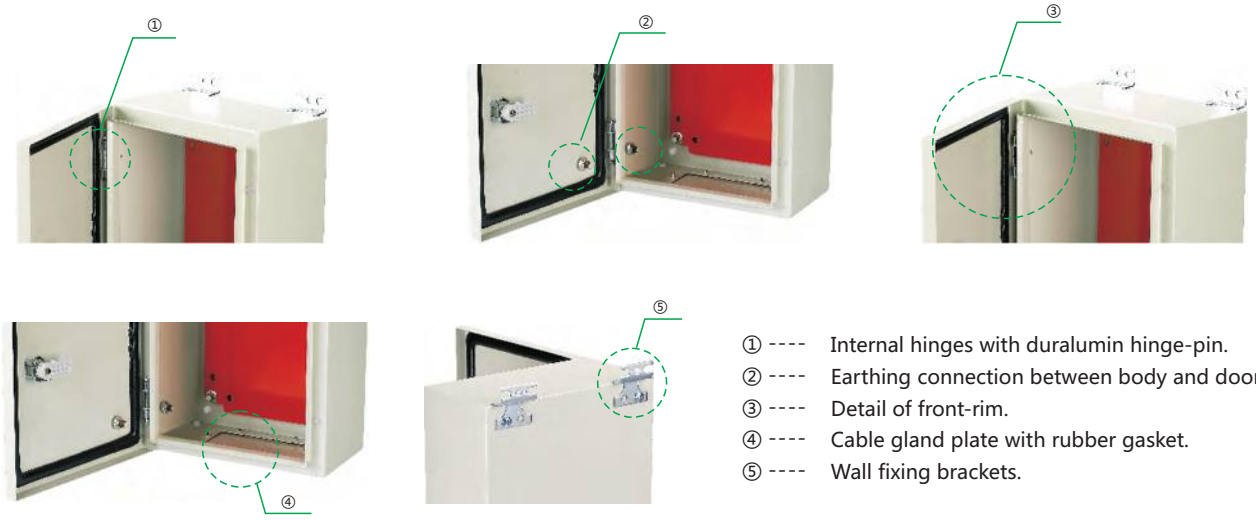

① ---- Internal hinges with duralumin hinge-pin.
② ---- Earthing connection between body and door.
③ ---- Detail of front-rim.
④ ---- Cable gland plate with rubber gasket.
⑤ ---- Wall fixing brackets.

Flange openings

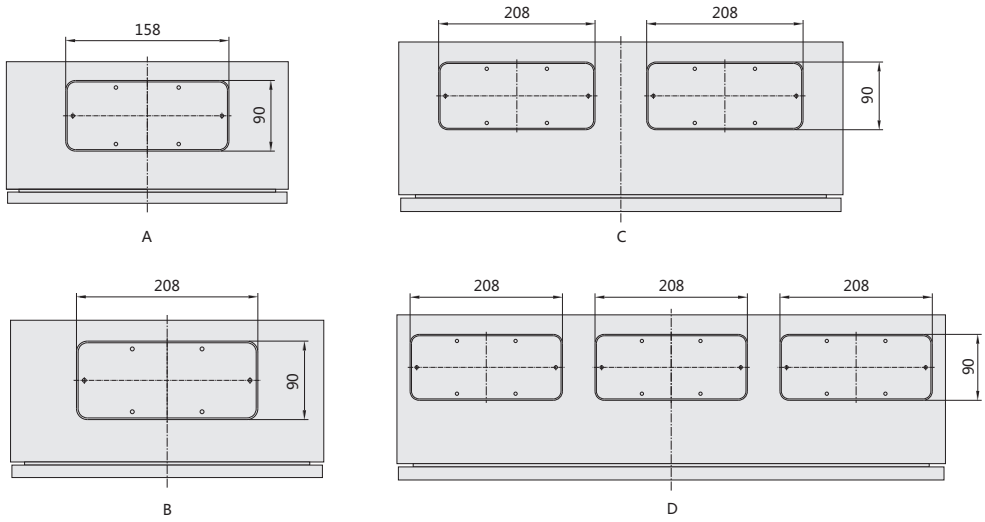

Note: The thickness of installation panel could be changed according to your specific requirement.
(Max. thickness 2.0mm). Drawing-bar lock is available when the width of NXW5 is bigger than 800mm.

5. Ordering information

Model No.	Height(H)×Width(W)× Depth(D)	No. of locks	No. of higes	Flange openings	Thickness
NXW5-2520/15	250×200×150	1	2	A	1.2
NXW5-3025/15	300×250×150	1	2	A	1.2
NXW5-3025/20	300×250×200	1	2	A	1.2
NXW5-3030/15	300×300×150	1	2	A	1.2
NXW5-3030/20	300×300×200	1	2	A	1.2
NXW5-3040/15	300×400×150	1	2	B	1.2
NXW5-3040/20	300×400×200	1	2	B	1.2

«Электро-Профи» - www.ep.ru

Model No.	Height(H)×Width(W)× Depth(D)	No. of locks	No. of higes	Flange openings	Thickness
NXW5-4030/15	400×300×150	1	2	A	1.2
NXW5-4030/20	400×300×200	1	2	A	1.2
NXW5-4040/15	400×400×150	1	2	B	1.2
NXW5-4040/20	400×400×200	1	2	B	1.2
NXW5-4060/15	400×600×150	1	2	C	1.2
NXW5-4060/20	400×600×200	1	2	C	1.2
NXW5-4060/25	400×600×250	1	2	C	1.2
NXW5-5040/15	500×400×150	2	2	B	1.2
NXW5-5040/20	500×400×200	2	2	B	1.2
NXW5-5040/25	500×400×250	2	2	B	1.2
NXW5-5050/15	500×500×150	2	2	B	1.2
NXW5-5050/20	500×500×200	2	2	B	1.2
NXW5-5050/25	500×500×250	2	2	B	1.2
NXW5-6040/15	600×400×150	2	2	B	1.2
NXW5-6040/20	600×400×200	2	2	B	1.2
NXW5-6040/25	600×400×250	2	2	B	1.2
NXW5-6050/15	600×500×150	2	2	B	1.2
NXW5-6050/20	600×500×200	2	2	B	1.2
NXW5-6050/25	600×500×250	2	2	B	1.2
NXW5-6060/20	600×600×200	2	2	C	1.2
NXW5-6060/25	600×600×250	2	2	C	1.2
NXW5-6060/30	600×600×300	2	2	C	1.2
NXW5-7050/15	700×500×150	2	2	B	1.5
NXW5-7050/20	700×500×200	2	2	B	1.5
NXW5-7050/25	700×500×250	2	2	B	1.5
NXW5-7050/30	700×500×300	2	2	B	1.5
NXW5-8060/20	800×600×200	2	3	C	1.5
NXW5-8060/25	800×600×250	2	3	C	1.5
NXW5-8060/30	800×600×300	2	3	C	1.5
NXW5-8060/38	800×600×380	2	3	C	1.5
NXW5-8080/20	800×800×200	2	3	C	1.5
NXW5-8080/25	800×800×250	2	3	C	1.5
NXW5-8080/30	800×800×300	2	3	C	1.5
NXW5-10060/25	1000×600×250	2	4	C	1.5
NXW5-10060/30	1000×600×300	2	4	C	1.5
NXW5-10060/38	1000×600×380	2	4	C	1.5
NXW5-10060/45	1000×600×450	2	4	C	1.5
NXW5-10080/25	1000×800×250	2	4	C	1.5
NXW5-10080/30	1000×800×300	2	4	C	1.5
NXW5-10080/38	1000×800×380	2	4	C	1.5
NXW5-10080/45	1000×800×450	2	4	C	1.5
NXW5-100100/25	1000×1000×250	2	4	D	1.5
NXW5-100100/30	1000×1000×300	2	4	D	1.5
NXW5-12080/25	1200×800×250	3	5	C	1.5
NXW5-12080/30	1200×800×300	3	5	C	1.5
NXW5-12080/38	1200×800×380	3	5	C	1.5
NXW5-12080/45	1200×800×450	3	5	C	1.5
NXW5-120100/25	1200×1000×250	3	5	D	1.5
NXW5-120100/30	1200×1000×300	3	5	D	1.5

«Электро-Профи» - www.ep.ru

A



MCB Shield (For eB and NH2)

1. General

Guarantee MCBs' wiring safety.

2. Features

Rated voltage: 220...240/380...415V
Rated current: up to 100A
Frequency: 50/60Hz
Poles of mounted units: 1P, 3P

3. Overall and mounting dimensions (mm)

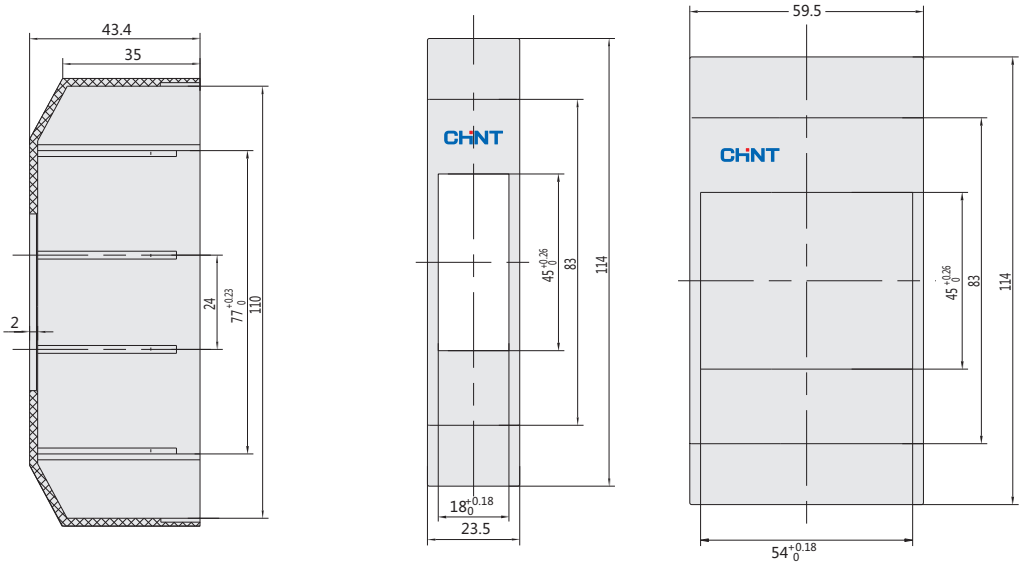

«Электро-Профи» - www.ep.ru

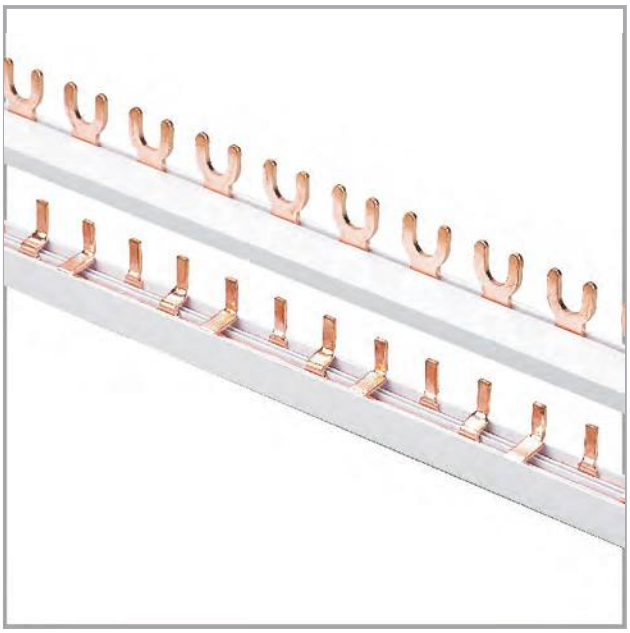

CBB-2 Busbar

1. General

Busbar is mainly applied to low-voltage distribution equipment for assembly of 18mm wide modularized products.

2. Naming rule

Naming rule:

Company	Product	S/N	Number of poles	Interface type	Cross-sectional area
C(CHINT)	BB(Busbar)	2	10:1P	1:needle type	10:10mm^2
C(CHINT)	BB(Busbar)	2	11:1P+N	2:U-type	16:16mm^2
			20:2P	3:1P+N in 18mm (upper interface)	
			30:3P	4:1P+N in 18mm (lower interface)	
			31:3P+N	5:1P+N in 36mm	
			40:4P	6:1P+N in 45mm	

Specific model:	Product order code
CBB-210110 (Needle-type busbar 1P 10m^2)	811000
CBB- 210116 (Needle-type busbar 1P 16m^2)	811004
CBB- 210210 (U-type busbar 1P 10m^2)	811008
CBB- 210216 (U-type busbar 1P 16m^2)	811012
CBB-211310 (1P+ N in 18mm upper-interface busbar 10m^2)	811016
CBB- 211410 (1P+ N in 18mm lower-interface busbar 10m^2)	811017
CBB- 211510 (1P+ N in 36mm busbar 10m^2)	811018
CBB- 211610 (1P+ N in 45mm busbar 10m^2)	811019
CBB- 220110 (Needle-type busbar 2P 10m^2)	811001
CBB- 220116 (Needle-type busbar 2P 16m^2)	811005
CBB- 220210 (U-type busbar 2P 10m^2)	811009
CBB- 220216 (U-type busbar 2P 16m^2)	811013
CBB- 230110 (Needle-type busbar 3P 10m^2)	811002
CBB- 230116 (Needle-type busbar 3P 16m^2)	811006
CBB- 230210 (U-type busbar 3P 10m^2)	811010
CBB- 230216 (U-type busbar 3P 16m^2)	811014
CBB- 231110 (Needle-type busbar 3P +N 10m^2)	811020
CBB- 240110 (Needle-type busbar 4P 10m^2)	811003
CBB- 240116 (Needle-type busbar 4P 16m^2)	811007
CBB- 240210 (U-type busbar 4P 10m^2)	811011
CBB- 240216 (U-type busbar 4P 16m^2)	811015

«Электро-Профи» - www.ep.ru

A

3 Operating conditions:

Operating temperature range: - 5℃~ + 40℃
Relative air humidity in 20℃: 90%
Altitude: ≤2000m
Pollution degree: 2

4 Main Technical Parameter

Table 1

Parameter name	Numeric value
Number of poles	1, 2, 3, 4
Rated voltage, V	230/400
Rated impulse withstand voltage Uimp, V	4000

CBB-2101

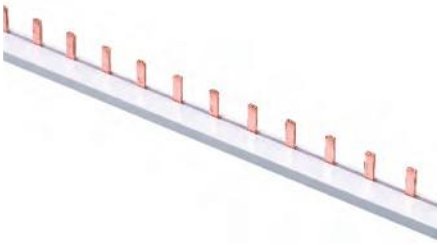

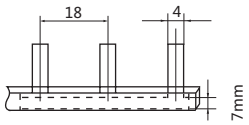

CBB-210110

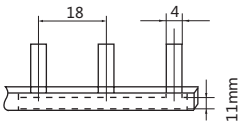

CBB-210116

Model	CBB-210110	CBB-210116
Thickness(mm)	1.5	1.5
Cross Section(mm)^2	10	16

CBB-2201

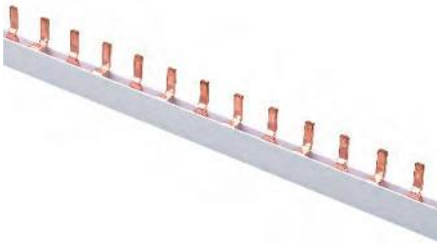

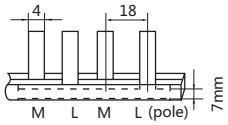

CBB-220110

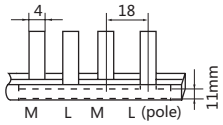

CBB-220116

Model	CBB-210110	CBB-210116
Thickness(mm)	1.5	1.5
Cross Section(mm)^2	10	16

CBB-2301

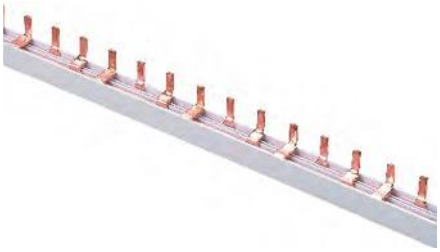

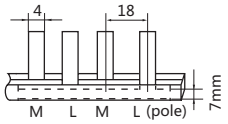

CBB-230110

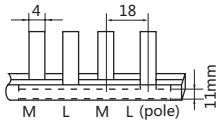

CBB-230116

Model	CBB-210110	CBB-210116
Thickness(mm)	1.5	1.5
Cross Section(mm)^2	10	16

«Электро-Профи» - www.ep.ru

CBB-2401

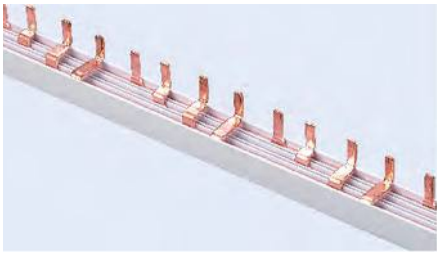

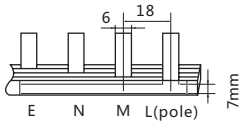

CBB-240110

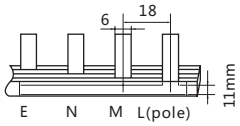

CBB-240116

Model	CBB-210110	CBB-210116
Thickness(mm)	1.5	1.5
Cross Section(mm)^2	10	16

CBB-2102

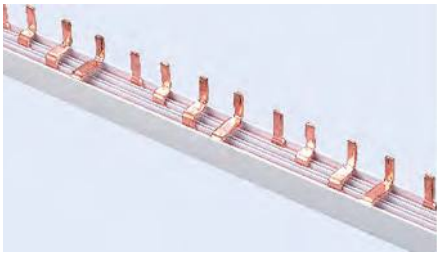

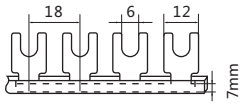

CBB-240110

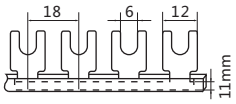

CBB-240116

Model	CBB-210110	CBB-210116
Thickness(mm)	1.5	1.5
Cross Section(mm)^2	10	16

CBB-2202

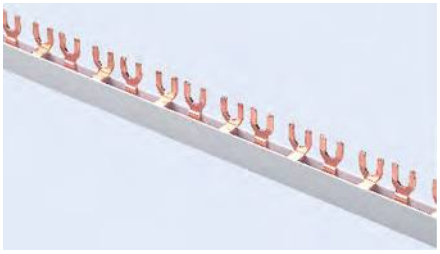

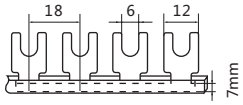

CBB-220210

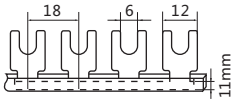

CBB-220216

Model	CBB-210110	CBB-210116
Thickness(mm)	1.5	1.5
Cross Section(mm)^2	10	16

«Электро-Профи» - www.ep.ru

A

CBB-2302

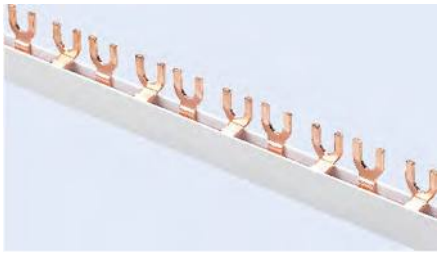

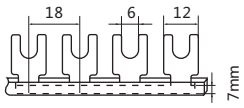

CBB-230210

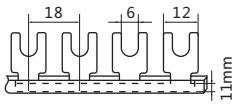

CBB-230216

Model	CBB-210110	CBB-210116
Thickness(mm)	1.5	1.5
Cross Section(mm)^2	10	16

CBB-2402

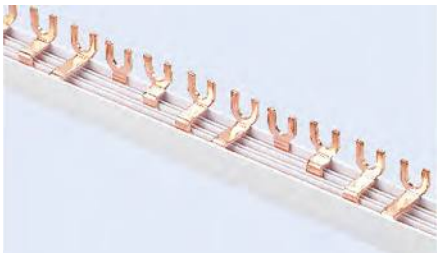

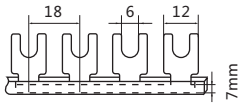

CBB-240210

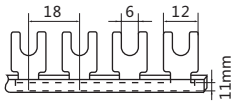

CBB-240216

Model	CBB-210110	CBB-210116
Thickness(mm)	1.5	1.5
Cross Section(mm)^2	10	16

CBB-211310 CBB-211410



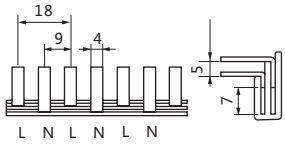

CBB-211310



CBB-211410

Model	CBB-210110	CBB-210116
Thickness(mm)	1.5	1.5
Cross Section(mm)^2	10	16

«Электро-Профи» - www.ep.ru

CBB-211510

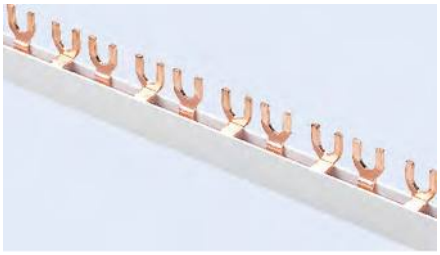

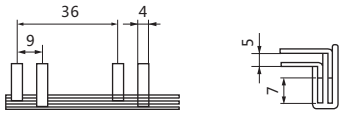

CBB-211510

Model	CBB-211510
Thickness(mm)	1.5
Cross Section(mm)^2	10

CBB-211610



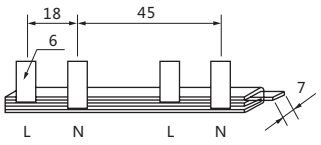

CBB-211610

Model	CBB-211610
Thickness(mm)	1.5
Cross Section(mm)^2	10

CBB-231110

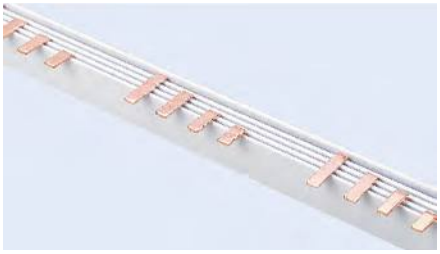

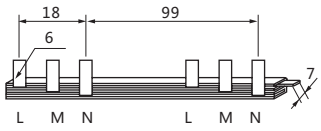

CBB-231110

Model	CBB-231110
Thickness(mm)	1.5
Cross Section(mm)^2	10

«Электро-Профи» - www.ep.ru

A

1P cap dimensions

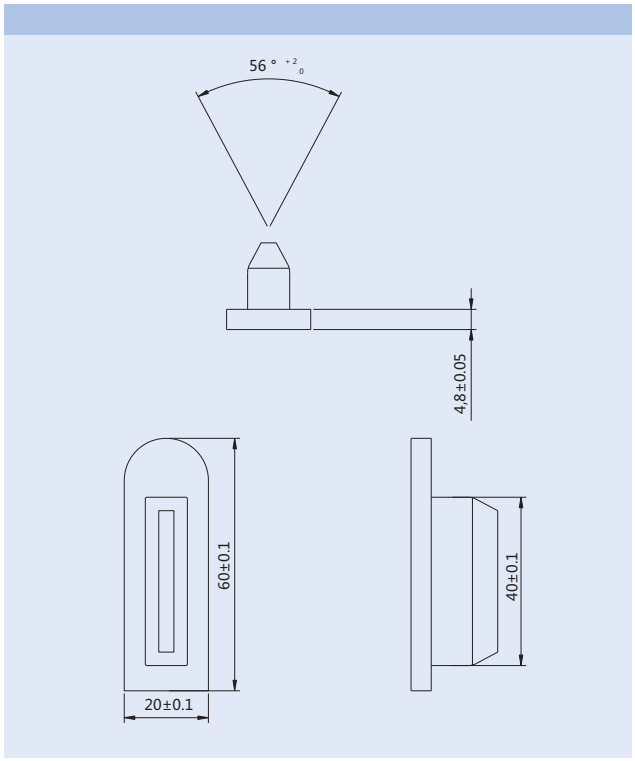

2P cap dimensions

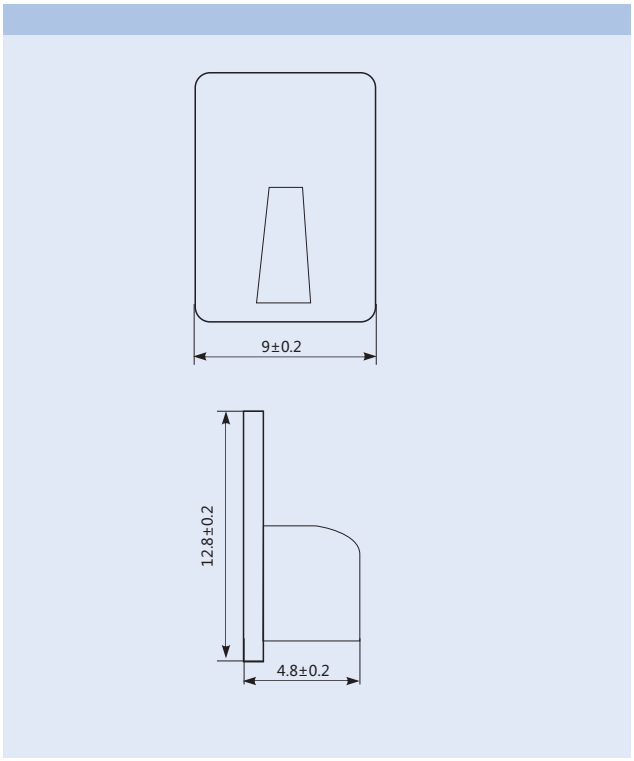

3P cap dimensions

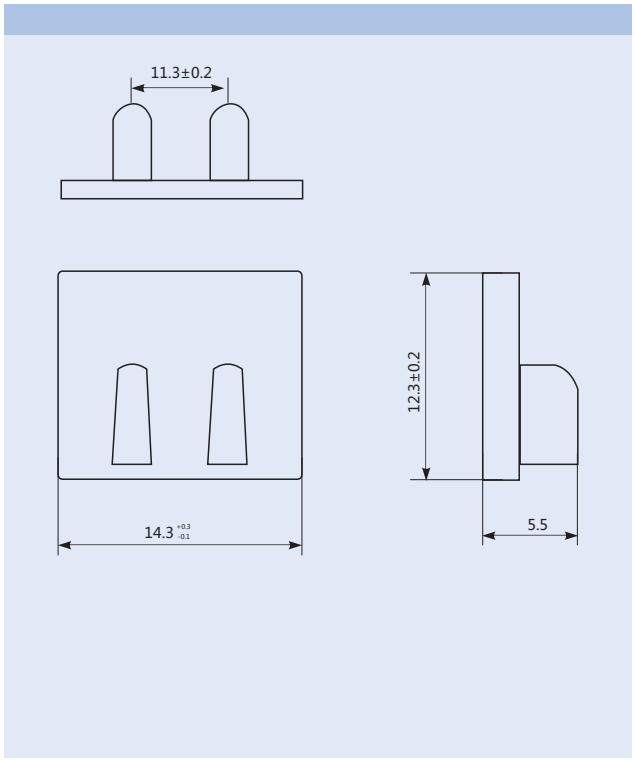

4P cap dimensions

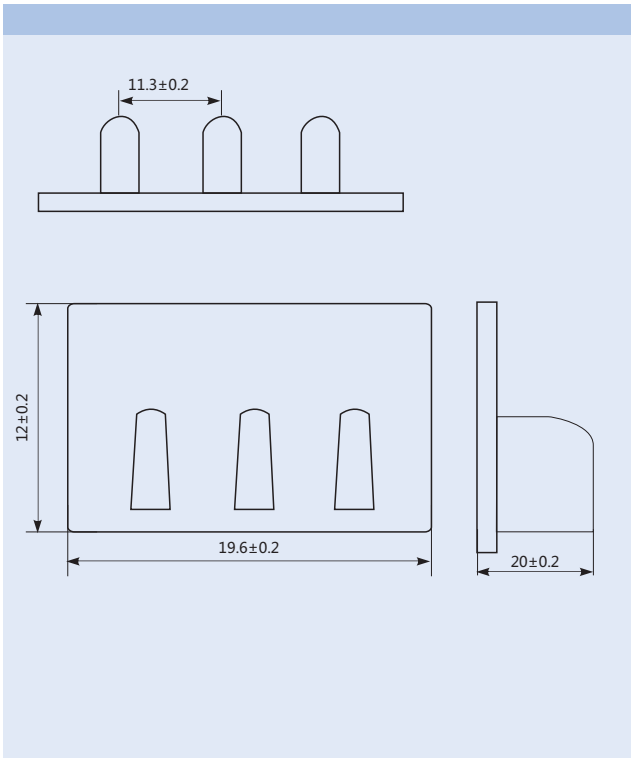

«Электро-Профи» - www.ep.ru

Model	Technical features						
	Application	Standard	Poles	Designation	Rated current	Breaking capacity	
NB1	AC	IEC/EN 60898-1	1P/2P/3P/4P	B/C/D	1-63A	6000A	
						10000A	
			1P/2P/3P		6-63A	6000A	
		IEC/EN 60947-2 VC8036	1P/2P/3P/4P	8-12In	1-63A	6KA	
		UL1077	1P/2P/3P/4P	B/C/D	1-63A	5KA	
			1P/3P	C	1-63A	5KA	
	DC	UL1077	1P/2P/3P/4P	B/C	1-63A	10KA	
eB	AC	IEC/EN 60898-1	1P/2P/3P/4P	B/C/D	1-63A	3000A	
						4500A	
				B/C	1-40A	6000A	
		IEC/EN 60947-2	2P	C	6-40A	6000A	
NB1-63G	AC	IEC/EN 60898-1	1P/2P/3P/4P	B/C	6-63A	6000A	
DZ158	AC	IEC/EN 60947-2	1P/2P/3P/4P	8-12In	63,80,100A	6KA	
					63,80,100,125A	10KA	
NBH8	AC	IEC/EN 60898-1	1P+N	B/C	1-40A	4500A	
						6000A	
NL1	AC	IEC/EN 61008-1 VC8035	2P	AC/A	25,40,63A	6000A	
			4P	AC/A	25,40,63A	6000A	
			2P	AC/A	25,40,63A	10000A	
			4P	AC/A	25,40,63A	10000A	
			2P/4P	AC/A AC-S/A-S	63,80,100A	10000A	
			2P/4P	AC	25,40,63A	6000/10000A	
NB1L (MCB+RCD block)	AC	IEC/EN 61009-1	2P/4P	AC	1-40A	6000A	
			2P/4P	AC/A	1-40A	10000A	
			1P+N/2P/3P/3P+N/4P	AC	1-63A	6000A	
NB1L (Combined)	AC	IEC/EN 61009-1	1P+N	A	1-25A	6000A	
			2P	A	6-40A	10000A	
NB3LE	AC	IEC/EN 61009-1	1P+N	AC	6-32A	6000A	
NBH8LE	AC	IEC/EN 61009-1	1P+N	AC	1-40A	4500/6000A	
DZ158LE	AC	IEC/EN 61009-1	1P+N/2P/3P/3P+N/4P	AC	63,80,100, 125A	6000A	
NB310L	AC	IEC/EN 61009-1	2P	A	6-32A	6000A	
NH2	AC	IEC/EN 60947-3	1P/2P/3P/4P		32,63,100,125A	20Ie	
NH4	AC	IEC/EN 60947-3	1P/2P/3P/4P		32,63,100,125A	20Ie	

«Электро-Профи» - www.ep.ru

A

	CE											RCC		SAA	
	●	●	●				●	●	●	●	●	●			
	●	●	●				●		●	●	●				
	●			●											
	●						●						●		
															●
															●
	●						●								
	●						●								
	●						●							●	
	●				●									●	
	●						●			●	●	●			
	●						●			●	●	●			
	●			●			●			●	●	●			
	●						●			●	●	●			
	●						●			●	●	●		●	
	●						●	●		●	●			●	
	●						●			●	●	●		●	
	●						●			●	●			●	
	●						●								
	●				●										
	●					●	●	●		●					
	●					●	●			●					
	●						●			●	●				
	●						●								
	●						●							●	
	●														
	●						●				●			●	
	●									●					
	●					●									
	●						●			●	●				
	●			●			●			●	●			●	

Moulded-case circuit-breaker

Stable performance, Safe protection





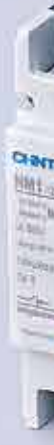

«Электро-Профи» - www.ep.ru



«Электро-Профи» - www.ep.ru

CHINT ELECTRIC

Moulded Case Circuit Breakers

MCCB



NM8, NM8S
Moulded Case Circuit Breakers

Page P-001



NM1
Moulded Case Circuit Breakers

Page P-066

«Электро-Профи» - www.ep.ru



NM8, NM8S
Moulded Case Circuit Breaker

1. General

1.1 Certificates: CE, DNV, KEMA, UKrSEPRO, EAC, RCC;
1.2 Electric ratings: AC50/60Hz, AC220V~690V
16A~1600A;
1.3 Standard: IEC/EN 60947-2.

2. Operating conditions

2.1 Temperature: -5℃~+40℃; the average value within 24h shall not exceed +35℃; for the circuit breaker with thermo-magnetic release, +40℃ is set to be the standard temperature for ratings. Special utilization,please refer to coefficients indicated on page 21 for temperature compensation correction;

2.2 Altitude: ≤2000m;

2.3 Pollution grade: Grade 3;

2.4 IP grade: IP40

2.5 Air conditions:
At mounting site, relative humidity not exceed 50% at the max temperature of +40℃, higher relative humidity is allowable under lower temperature.
For example, RH could be 90% at +20℃, special measures should be taken to occurrence of dews.

3. Type designation

NM 8 □- □ □/□/ □/ □

- Company code
- MCCB
- Design sequence number
- Release type code:
  Blank: thermal-magnetic release;
  S: Electronic release;
- Frame size rated current: 125, 250, 400, 630, 800, 1250, 1600
- Breaking capacity code:
  S: Standard type; (current limiting technology utilised)
  H: Higher type; (current limiting technology utilised)
  R: Current limiting type (current limiting technology utilised)
- Rated current :
  125: 16, 20, 25, 32, 40, 50, 63, 80, 100, 125
  250: 100, 125, 160,180, 200, 225, 250
  400: 250, 315, 350, 400
  630: 250, 315, 350, 400, 500, 630 (for thermo-magnetic breaker, the rated operational current be up to 500A)
  800: 630, 700, 800
  1250:630, 700, 800, 1000, 1250
  1600: 1000,1250,1600 (Only electronic products)
- M: for motor protection
  Number of poles: 1: 1-pole 2: 2-pole 3: 3-pole 4: 4-pole
  With current release components, N-pole makes and breaks with other three poles, N-pole first makes then breaks, N-pole operating value is 1.0In of other three poles
- Application code
  Blank: for power distribution;

4. Product overview

NM8 Moulded Case Circuit Breaker

1. Body
2. Thermo magnetic release
3. Electronic release
4. Plug-in base
5. Rotary manual operating handle
6. Motor driven operating mechanism
7. Under-voltage release
8. Shunt release
9. Alarm contact
10. Auxiliary contact
11. Front connection plate
12. Rear connection plate
13. Locking system(padlock)
14. Short terminal cover
15. Extended terminal cover
16. DIN rail adaptor
17. Cage clamp terminal
18. Mechanical interlock

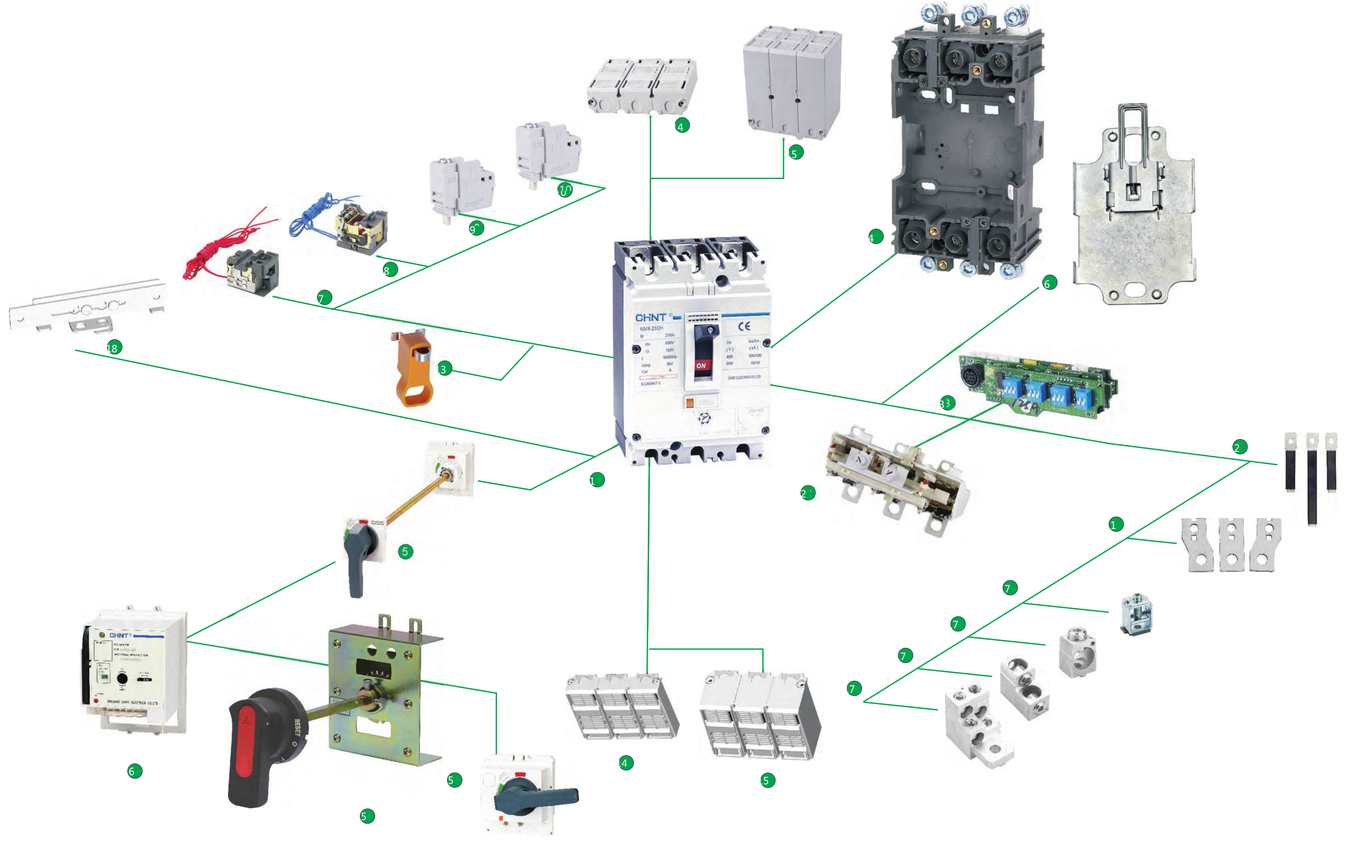

B

«Электро-Профи» - www.ep.ru

5. Technical data

5. 1 Parameters

NM8 circuit breaker Thermal-magnetic type		NM8-125				NM8-250			NM8-400			NM8-630			NM8-800			NM8-1250		
4 Frames		Frame 1				Frame 2			Frame 3						Frame 4					
Electric characteristics as per IEC 60947-2 and EN60947-2																				
Rated current(A)	In	16, 20, 25, 32, 40, 50, 63, 80, 100, 125				100, 125, 160, 180, 200, 225, 250			250, 315, 350, 400			250, 315, 350, 400, 500			630, 700, 800			630, 700, 800, 1000, 1250		
Rated insulation voltage (V)	Ui	800				800			800			800			800			800		
Rated impulse withstand voltage (kV)	Uimp	8				8			8			8			8			8		
Rated operational voltage (V) Ue	AC 50/60Hz	690				690			690			690			690			690		
	DC	-				-			-			-			-			-		
Number of poles		1①	2	3	4	2	3	4	3	4		3	4		3	4		3	4	
																				
Breaking capacity code		-	H	C	S	H	R	C	S	H	H	C	S	H	R	C	S	H	S	H	R	S	H	S	H	R	S	H	S	H	R	S	H	S	H	R	S	H
Rated ultimate short-circuit breaking capacity (kA RMS) Icu	AC 380V/400V/415V	-	100	35	50	100	150	35	50	100	100	35	50	100	150	35	50	100	70	100	150	70	100	70	100	150	70	100	50	70	⎓	50	70	50	70	⎓	50	70
	AC 660V/690V	-	8	6	8	8	8	6	8	8	10	6	10	10	10	6	10	10	15	15	15	15	15	15	15	15	15	15	10	20	⎓	10	20	10	20	⎓	10	20
Rated service breaking capacity Ics= (%Icu)		100				100			100②			100②			50			50		
Suitability for isolation		■				■			■			■			■			■		
Utilization category		A				A			A			A			A			A		
Safety of insulation		■				■			■			■			■			■		
Life(CO recycle)	Mechanical	20,000				20,000			15,000			15,000			10,000			10,000		
	Electrical	10,000				10,000			6,000			6,000			6,000			6,000		
Protection		Thermo-magnetic				Thermo-magnetic			Thermo-magnetic			Thermo-magnetic			Thermo-magnetic			Thermo-magnetic		
Release units		■				■			■			■			■			■		
Over-load protection		■				■			■			■			■			■		
Short-circuit protection		■				■			■			■			■			■		
Residual current protection	Added on residual current protection module	–				–			–			–			–			–		
Mounting and connection																				
Fixed	Front connection	■				■			■			■			■			■		
	Rear connection	■				■			■			■			–			–		
DIN rail	Front connection	■				■			–			–			–			–		
Plug-in	Front connection	■				■			■			■			–			–		
	Rear connection	■				■			■			■			–			–		
Manual	Handle	■				■			■			■			–			–		
	Direct or extended rotary handle	■				■			■			■			■			■		
Motor-driven mechanism		■				■			■			■			■			■		
Manual, remote operated automatic source changeover systems		■				■			■			■			■			■		
Shunt and under-voltage release		■				■			■			■			■			■		
Auxiliary and alarm contact		■				■			■			■			■			■		
Pad locking system		■				■			■			■			–			–		
Mounting and connection accessories																				
Connection terminal		■				■			■			■			■			■		
Front connection plate		■				■			■			■			■			■		
Rear connection plate		■				■			■			■			–			–		
DIN rail adaptor		■				■			–			–			–			–		
Plug-in type connection accessories		■				■			■			■			–			–		
Terminal covers		■				■			■			■			■			■		
Interphase barrier		■				■			■			■			■			■		
Dimension and weight																				
Dimension(mm)W×H×L	Fixed type-front connection	62×140×79		90×140×79	120×140×79	70×157×88		105×157×88	140×157×88			140×255×113		185×255×113	140×255×113		185×255×113	210×370×196		280×370×196	210×370×196		280×370×196
Weight(kg)	Fixed type-front connection	0.85		1.2	1.6	1.5		2.1	2.8			7.5		10	7.5		10	17.5		23	17.5		23

Note:
① For 1 pole product, Ics=100%Icu=45kA @AC220V/ 240V
② When Ue is ≥660V, Ics=50% Icu.

NM8S circuit breaker Electronic type		NM8S-125		NM8S-250		NM8S-400			NM8S-630①			NM8S-800			NM8S-1250			NM8S-1600		
3 Frames		Frame 1				Frame 2						Frame 3								
Electric characteristics as per IEC 60947-2 and EN60947-2																				
Rated current(A)	In	40, 50, 63, 80, 100, 125		100, 125, 160, 180, 200, 225, 250		250, 315, 350, 400			250, 315, 350, 400, 500, 630			630, 700, 800			630, 700, 800, 1000, 1250			1000, 1250, 1600		
Rated insulation voltage (V)	Ui	800				800			800			800			800			800		
Rated impulse withstand voltage (kV)	Uimp	8				8			8			8			8			8		
Rated operational voltage (V) Ue	AC 50/60Hz	690				690			690			690			690			415		
	DC	-				-			-			-			-			-		
Number of poles		3		4		3		4	3		4	3		4	3		4	3		4
																				
Breaking capacity code		S	H	S	H	S	H	R	S	H	S	H	R	S	H	S	H	R	S	H	S	H	R	S	H
Rated ultimate short-circuit breaking capacity (kA RMS) Icu	AC 380V/400V/415V	70	100	70	100	70	100	150	70	100	70	100	150	70	100	50	70	⎓	50	70	50	70	⎓	50	70
	AC 660V/690V	10	10	10	10	15	15	15	15	15	15	15	15	15	15	–	–	–	–	–	–	–	–	–	–
Rated service breaking capacity Ics= (%Icu)		100				100②			100②			50			50			50		
Suitability for isolation		■				■			■			■			■			■		
Utilization category		A				A			A			A			A			A		
Safety of insulation		■				■			■			■			■			■		
Life(CO recycle)	Mechanical	20,000				15,000			15,000			10,000			10,000			10,000		
	Electrical	20,000				6,000			4,000			4,000			4,000			4,000		
Protection		Electronic				Electronic			Electronic			Electronic			Electronic			Electronic		
Release units		■				■			■			■			■			■		
Over-load protection		■				■			■			■			■			■		
Short-circuit protection		■				■			■			■			■			■		
Residual current protection	Added on residual current protection module	–				–			–			–			–			–		
Mounting and connection																				
Fixed	Front connection	■				■			■			■			■			■		
	Rear connection	■				■			■			–			–			–		
DIN rail	Front connection	■				–			–			–			–			–		
Plug-in	Front connection	■				■			■			–			–			–		
	Rear connection	■				■			■			–			–			–		
Manual	Handle	■				■			■			–			–			–		
	Direct or extended rotary handle	■				■			■			■			■			■		
Motor-driven mechanism		■				■			■			■			■			■		
Manual, remote operated automatic source changeover systems		■				■			■			■			■			■		
Shunt and under-voltage release		■				■			■			■			■			■		
Auxiliary and alarm contact		■				■			■			■			■			■		
Pad locking system		■				■			■			–			–			–		
Mounting and connection accessories																				
Connection terminal		■				■			■			■			■			■		
Front connection plate		■				■			■			■			–			–		
Rear connection plate		■				■			■			–			–			–		
DIN rail adaptor		■				–			–			–			–			–		
Plug-in type connection accessories		■				■			■			–			–			–		
Terminal covers		■				■			■			■			■			■		
Interphase barrier		■				■			■			■			■			■		
Dimension and weight																				
Dimension(mm)W×L×H	Fixed type-front connection	105×157×88		140×157×88		140×255×113		185×255×113	140×255×113		185×255×113	210×370×196		280×370×196	210×370×196		280×370×196	210×370×201		280×370×201
Weight(kg)	Fixed type-front connection	2.1		2.8		8		11	8		11	17.5		23	17.5		23	23		30

Note: ① The rated current of NM8S-630 plug-in type up to 570A.

«Электро-Профи» - www.ep.ru

5.2 The following table shows which connection diagram to use according to the number of poles to be connected in series to obtain the required breaking capacity, in relation to the type of distribution network:

Rated voltage V	protection function	Isolation	Earth-insulated network	Network with one polarity[1] earthed	Network with a middle point earthed
≤250	■	■	A	A	A
	■	-	-	-	-
≤500	■	■	A	B	A
	■	-	-	C	-

Note:
a. The risk of double earth fault is nil, therefore the fault current only involves a part of the interruption poles.
b. For connection with four poles in series, circuit-breakers with neutral at 100% of the phase settings must be used.

6. Release

6.1 Thermo-magnetic release
6.1.1 Thermo-magnetic release of NM8-250, 400, 630, 800 and 1250 breakers can be set to meet protection requirements

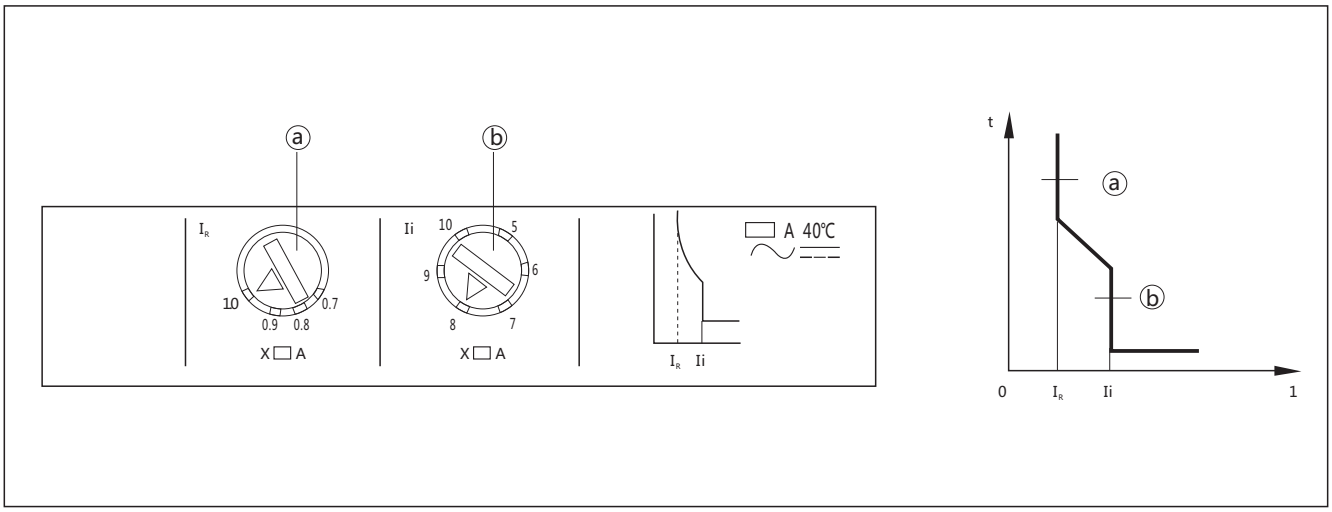

Adjustable setting of over-load protection ⓐ
Adjustable setting of short-circuit protection or fixed ⓑ

«Электро-Профи» - www.ep.ru

Thermo-magnetic release	NM8-125	NM8-250	NM8-400	NM8-630	NM8-800	NM8-1250
Rated value (A) In 40℃	16, 20, 25, 32, 40, 50, 63, 80, 100, 125	100, 125, 160, 180, 200, 225, 250	250,315, 350, 400	250, 315, 350, 400, 500	630, 700, 800	630, 700, 800, 1000, 1250
Over-load protection	Thermo protection					
Tripping current IR (A)	Adjustable range (0.8~1)XIn	Adjustable range (0.7~1)XIn	Adjustable range (0.7~1)XIn	Adjustable range (0.7~1)XIn	Adjustable range (0.8~1)XIn	Adjustable range (0.8~1)XIn
N-pole protection (A) 4A, 4B 4C, 4D	Without protection 1.0XIn	Without protection 1.0XIn	Without protection 1.0XIn	Without protection 1.0XIn	Without protection 1.0XIn	Without protection 1.0XIn
Short-circuit protection	Magnetic protection					
Tripping current Ii (A)	10In (for power distribution protection)	Adjustable range (5~10) XIn (8~12)In(for motor protection)	Adjustable range (5~10) XIn (8~12)In(for motor protection)	Adjustable range (5~10) XIn (8~12)In(for motor protection)	Adjustable range (5~10) XIn (8~12)In(for motor protection)	Adjustable range (5~10)XIn

NM8-250, (100~180)A: adjustable magnetic protection value=(6~10)In, (200~250)A: adjustable magnetic protection value=(5~10)In

«Электро-Профи» - www.ep.ru

6.1.2 Characteristic of thermo protection operation of thermo-magnetic release for power distribution

Serial No.	Test current	I/In	Conventional time	Initial status
1	Conventional non-tripping current	1.05	> 1h (In≤63A) > 2h (In > 63A)	Cold status
2	Conventional tripping current	1.3	≤1h (In≤63A) ≤2h (In > 63A)	Right after test 1

6.1.3 Characteristic of thermo protection operation of thermo-magnetic release for motor protection

Serial No.	Test current	I/In	Conventional time	Initial status
1	Conventional non-tripping current	1.0	> 2h	Cold status
2	Conventional tripping current	1.2 1.5 7.2	≤2h ≤4min 4s≤T≤10s	Right after test 1

6.2 Electronic Release

6.2.1 NM8S-125, 250 electronic release is an universal module.
It is of 11 current specifications: 40A, 50A, 63A, 80A, 100A,125A, 160A, 180A, 200A, 225A and 250A to adjust setting values and to meet protection requirements.

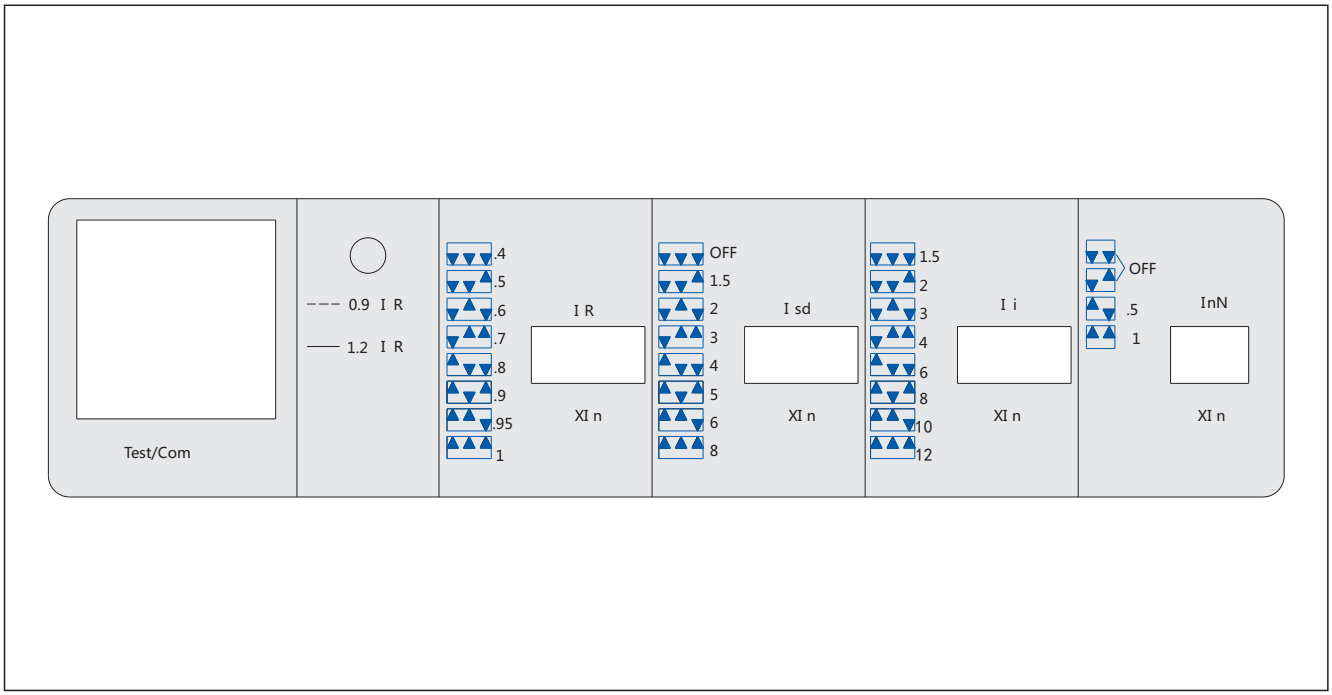

«Электро-Профи» - www.ep.ru

The indicator light flashes, when single-phase operational current is ≤90% IR.
The indicator light is always lit, when single-phase operational current is ≥115% IR.

Electronic release	NM8S-125	NM8S-250
Rated value In (A) 20~70℃	40, 50, 63, 80, 100, 125	100, 125, 160, 180, 200, 225, 250
Over-load protection	Thermal protection	
Tripping current I_R	Adjustable range 0.4, 0.5, 0.6, 0.7, 0.8, 0.9, 0.95, 1XIn	Adjustable range 0.4, 0.5, 0.6, 0.7, 0.8, 0.9, 0.95, 1XIn
Tripping time 1.05_{IR} $1.3\ I_R$ $1.5\ I_R$ $6I_R$	>2h non tripping ≤1h 96s 6s	>2h non tripping ≤1h 96s 6s
N-line protection tripping current InN	Adjustable rage OFF, 0.5, 1XIn	Adjustable rage OFF, 0.5, 1XIn
Tripping current Ii	Adjustable range 1.5, 2, 3, 4, 6, 8, 10, 12XIn	Adjustable range 1.5, 2, 3, 4, 6, 8, 10, 12XIn
Short time-delay short current protection tripping current Isd	Adjustable range OFF, 1.5, 2, 3, 4, 6, 8XIn	Adjustable range OFF, 1.5, 2, 3, 4, 6, 8XIn

6.2.2 NM8S-400, 630 electronic release is an universal module.
It is of 6 current specifications: 250A, 315A, 350A, 400A, 500A, and 630A to adjust setting values and to meet protection requirements.

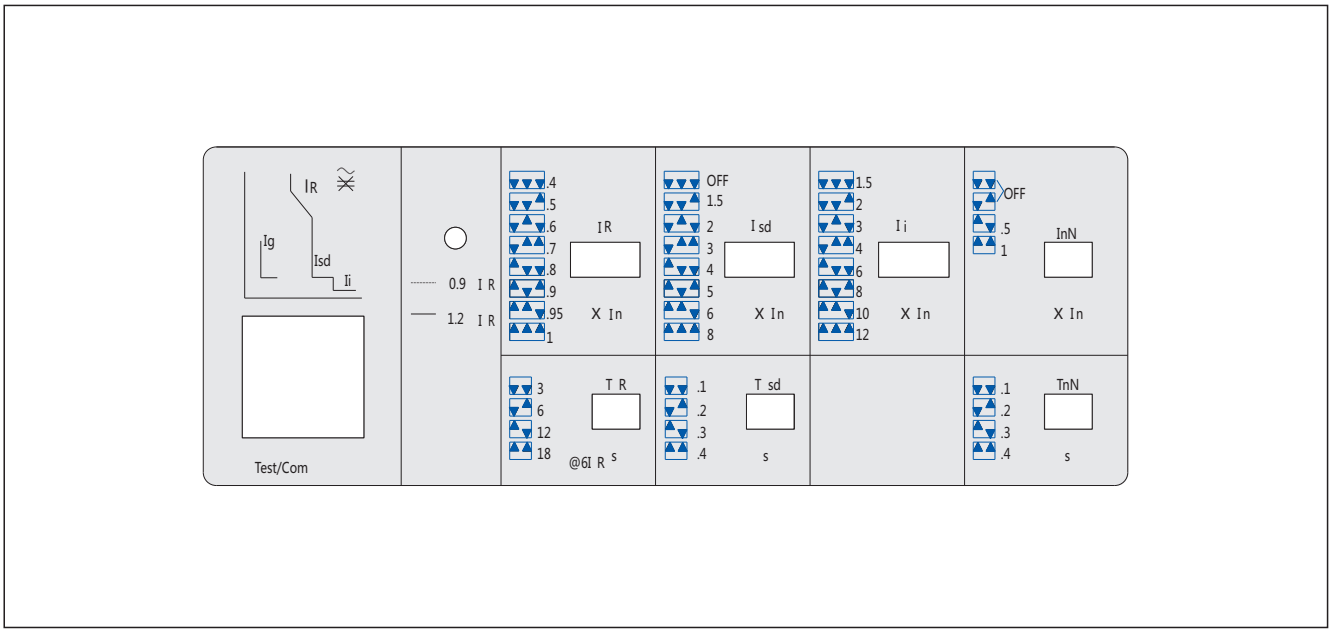

«Электро-Профи» - www.ep.ru

6.2.3 NM8S-800, 1250, 1600electronic release is an universal module. It is of 6 current specifications: 630A, 700A, 800A, 1000A, 1250A and 1600A to adjust setting values and to meet protection requirements.
The release is of wide setting range and multi-functional modules can be selected.

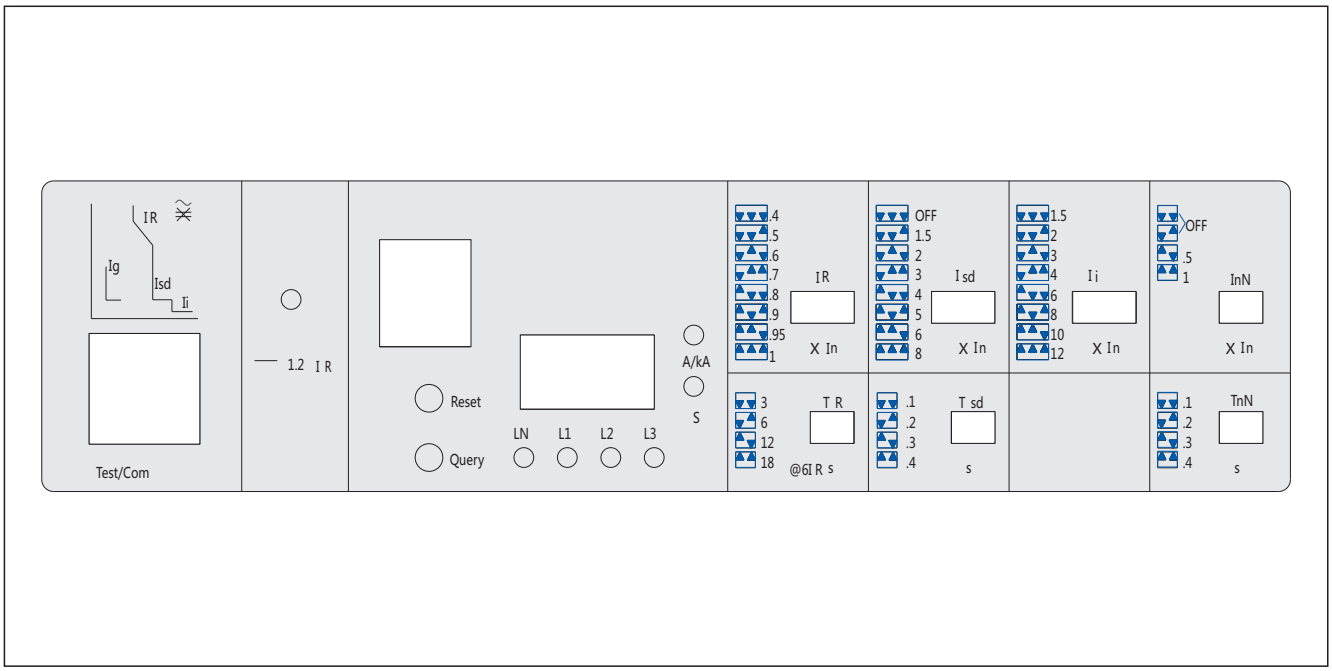

Tripping current I_R, I_{sd}, I_i should be set with three-digit switch or rotary knob as per current.

- I_R setting of over-load protection
  IR could be adjusted as per customers' requirements,
  and TR, tripping time at the status of 6IR can be set as per customers' requirements.

Model	1.05 I_R	1.3 I_R	1.5 I_R (s)	2.0 I_R (s)	6 I_R (s)
NM8S-400, 630	> 2h non-tripping	< 1h tripping	48,96, 192, 288	27, 54, 108, 162	3, 6, 12, 18
NM8S-800,1250,1600	> 2h non-tripping	< 1h tripping	48, 96, 192, 288	27, 54, 108, 162	3, 6, 12, 18

«Электро-Профи» - www.ep.ru

B

- I_r indicator light for over-load status indication
  The indicator light flashes, when single-phase operational current is $< 90\% I_R$
  The indicator light is always lit, when single-phase operational current is $\geq 115\% I_R$

- I_{sd} setting of short-circuit protection and tripping time
  Setting value of current Isd could be adjusted as per customers' requirements and OFF stands for status without ST protection;
  T_{sd} the tripping time could be adjusted as per customers' requirements.

- I_i setting of short-circuit protection
  Value of setting current could be adjusted as per customers' requirements

- I_{nN} setting of protection operations
  As a 4P circuit breaker with N-line protection, setting value of current Ig could be adjusted as per customers' requirements and OFF stands for status without protection of N-pole; T_{nN} the operating time of N-pole could be adjusted as per customers' requirements.

Electronic release	NM8S-400	NM8S-630	NM8S-800	NM8S-1250	NM8S-1600
Rated value A In 20~70℃	250, 315, 350, 400	250, 315, 350, 400, 500, 630	630, 700, 800	630, 700, 800, 1000, 1250	1000, 1250, 1600
long time-delay over-load protection (thermal protection)					
Tripping current I_R (A)	Adjustable range 0.4, 0.5, 0.6, 0.7, 0.8, 0.9, 0.95, 1XIn	Adjustable range 0.4, 0.5, 0.6, 0.7, 0.8, 0.9, 0.95, 1XIn	Adjustable range 0.4, 0.5, 0.6, 0.7, 0.8, 0.9, 0.95, 1XIn	Adjustable range 0.4, 0.5, 0.6, 0.7, 0.8, 0.9, 0.95, 1XIn	Adjustable range 0.4, 0.6, 0.7, 0.8, 0.9, 0.95, 1`In
Tripping time $6I_R$ (s)	Adjustable range 3, 6, 12, 18	Adjustable range 3, 6, 12, 18	Adjustable range 3, 6, 12, 18	Adjustable range 3, 6, 12, 18	Adjustable range 3, 6, 12, 18
short time-delay short-circuit protection					
Tripping current I_{sd} (A)	Adjustable range OFF, 1.5, 2, 3, 4, 5, 6, 8XIn	Adjustable range OFF, 1.5, 2, 3, 4, 5, 6, 8XIn	Adjustable range OFF, 1.5, 2, 3, 4, 5, 6, 8XIn	Adjustable range OFF, 1.5, 2, 3, 4, 5, 6, 8XIn	Adjustable range OFF, 1.5, 2, 3, 4, 5, 6, 8`In
Tripping time T_{sd} (s)	Adjustable range 0.1, 0.2, 0.3, 0.4	Adjustable range 0.1, 0.2, 0.3, 0.4	Adjustable range 0.1, 0.2, 0.3, 0.4	Adjustable range 0.1, 0.2, 0.3, 0.4	Adjustable range 0.1, 0.2, 0.3, 0.4
(Instantaneous) short-circuit protection					
Tripping current I_i (A)	Adjustable range 1.5, 2, 3, 4, 6, 8, 10, 12XIn 12In(for motor protection)	Adjustable range 1.5, 2, 3, 4, 6, 8, 10, 12XIn 12In(for motor protection)	Adjustable range 1.5, 2, 3, 4, 6, 8, 10, 12XIn 12In(for motor protection)	Adjustable range 1.5, 2, 3, 4, 6, 8, 10, 12XIn 12In(for motor protection)	Adjustable range 1.5, 2, 3, 4, 6, 8, 10, 12XIn 12In(for motor protection)
(N-line) protection					
Tripping current I_{nN} (A)	Adjustable range OFF, 0.5, 1XIn	Adjustable range OFF, 0.5, 1XIn	Adjustable range OFF, 0.5, 1XIn	Adjustable range OFF, 0.5, 1XIn	Adjustable range OFF, 0.5, 1XIn
Tripping time T_{nN} (s)	Adjustable range 0.1,0.2, 0.3, 0.4	Adjustable range 0.1,0.2, 0.3, 0.4	Adjustable range 0.1,0.2, 0.3, 0.4	Adjustable range 0.1,0.2, 0.3, 0.4	Adjustable range 0.1,0.2, 0.3, 0.4

«Электро-Профи» - www.ep.ru

7. Curves

7.1 Tripping curve (ambient temperature +40℃)

NM8-125(16A, 20A)

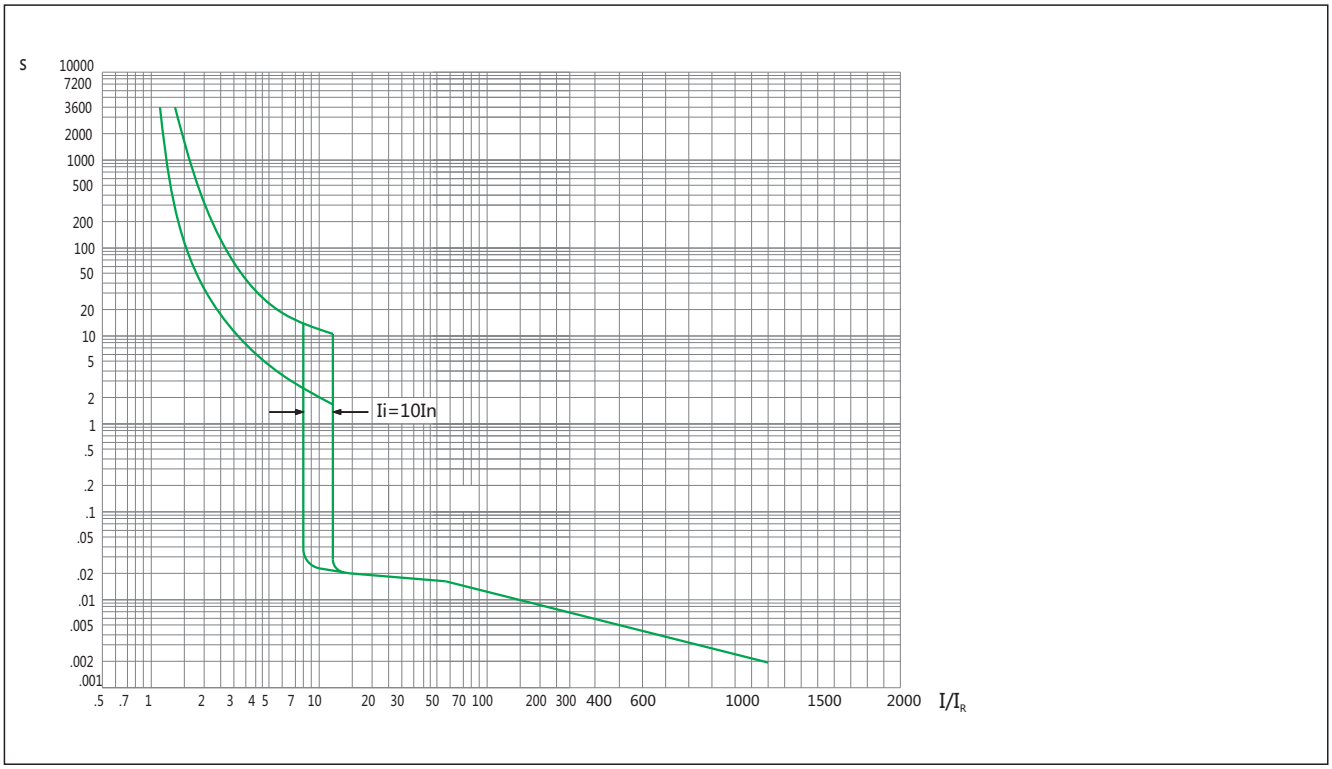

NM8-125(25A, 32A)

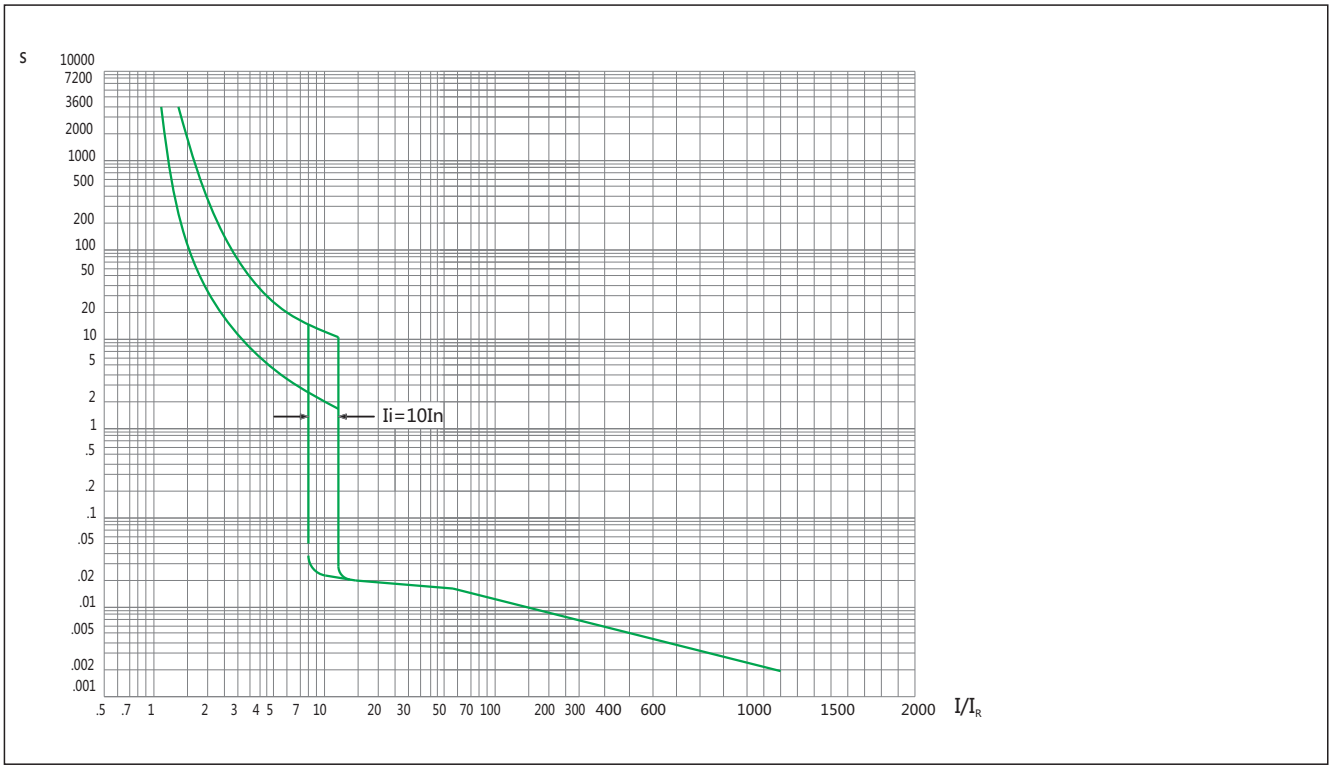

«Электро-Профи» - www.ep.ru

B

NM8-125(40A, 50A)

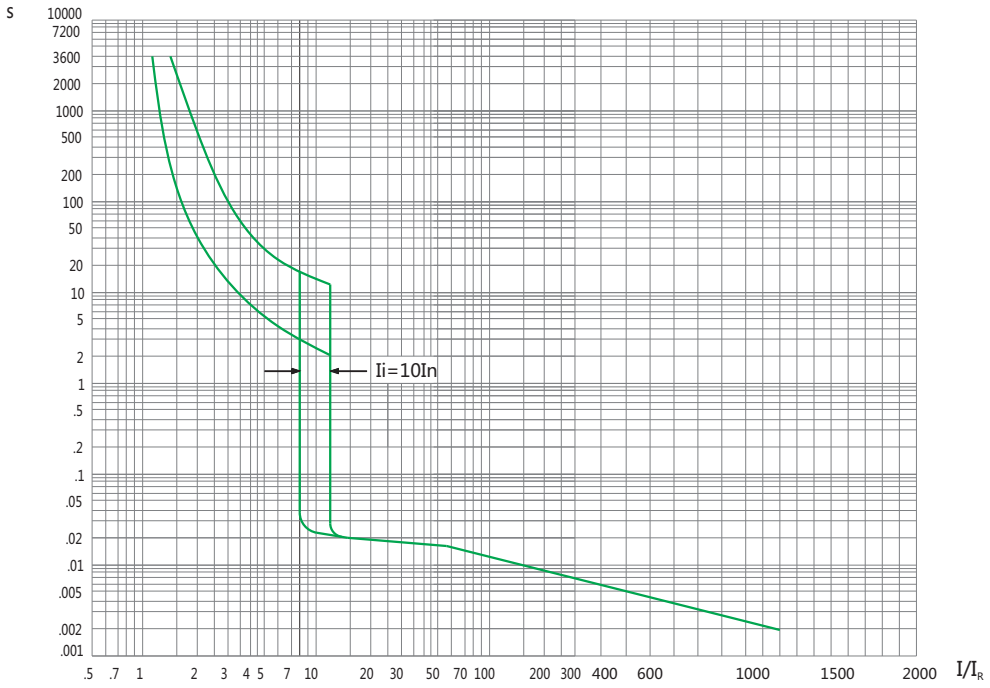

NM8-125(63A, 80A, 100A, 125A)

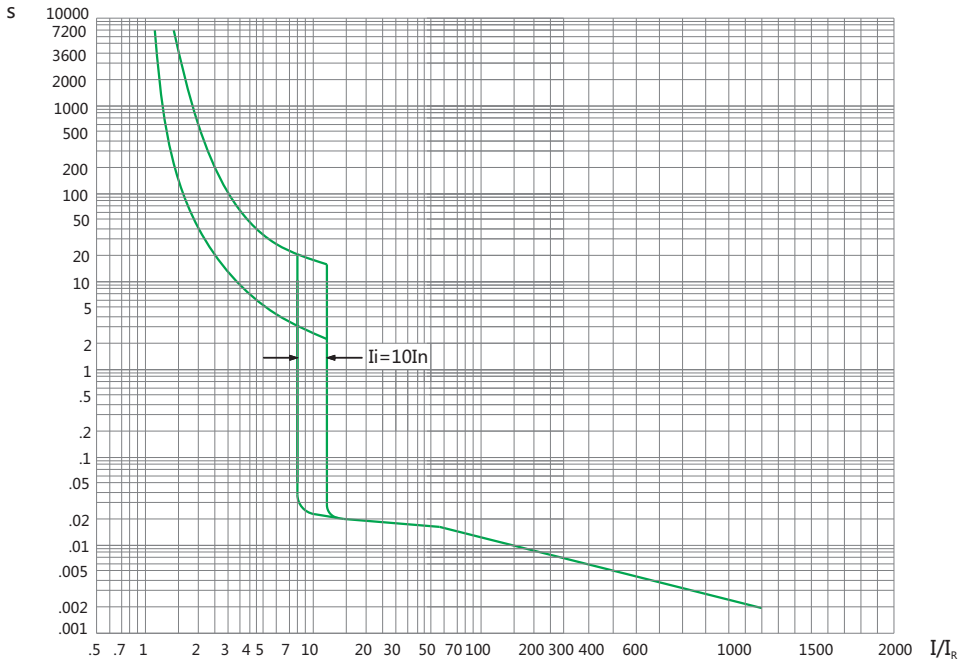

«Электро-Профи» - www.ep.ru

NM8-250(100A, 125A)

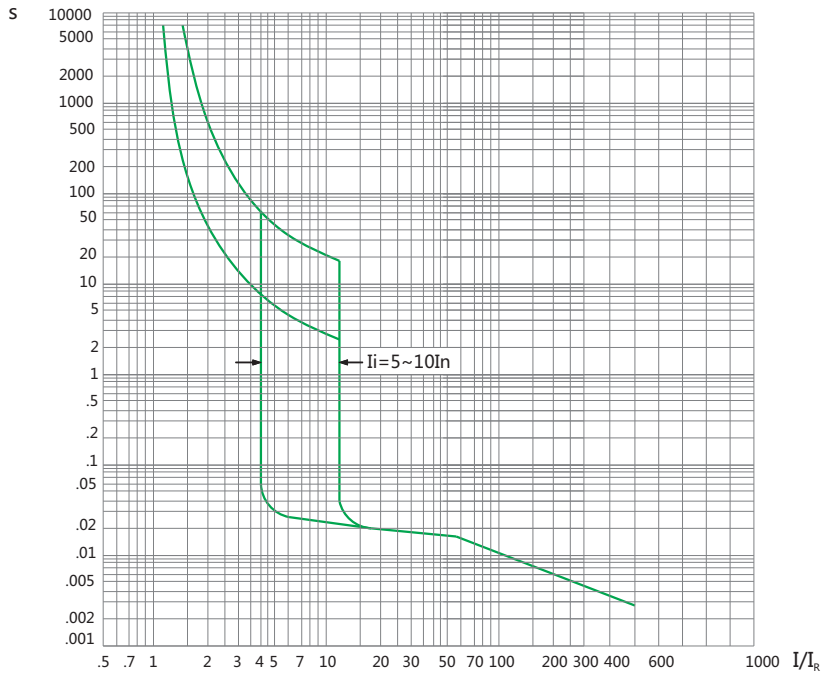

NM8-250(160A, 180A)

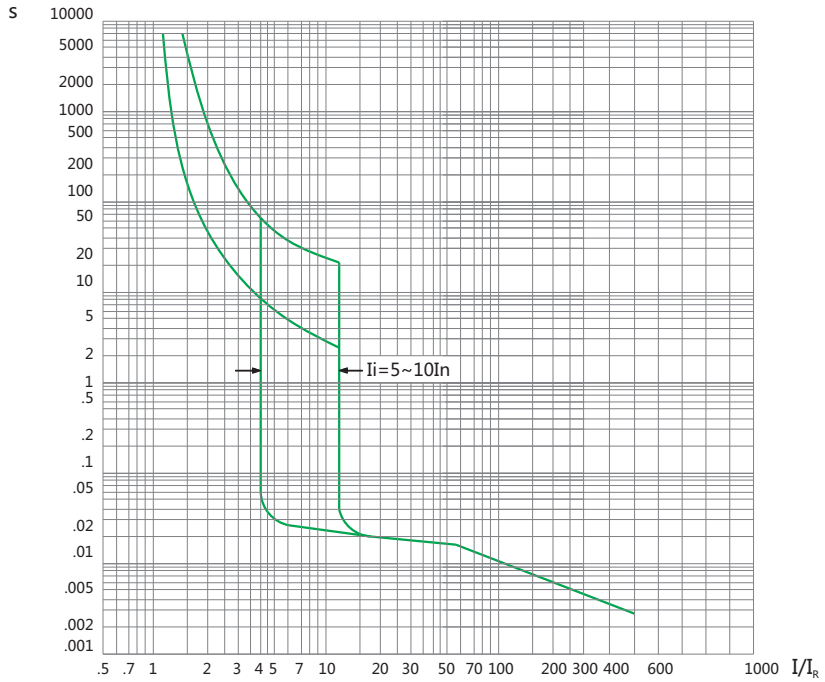

«Электро-Профи» - www.ep.ru

B

NM8-250(200A, 225A, 250A)

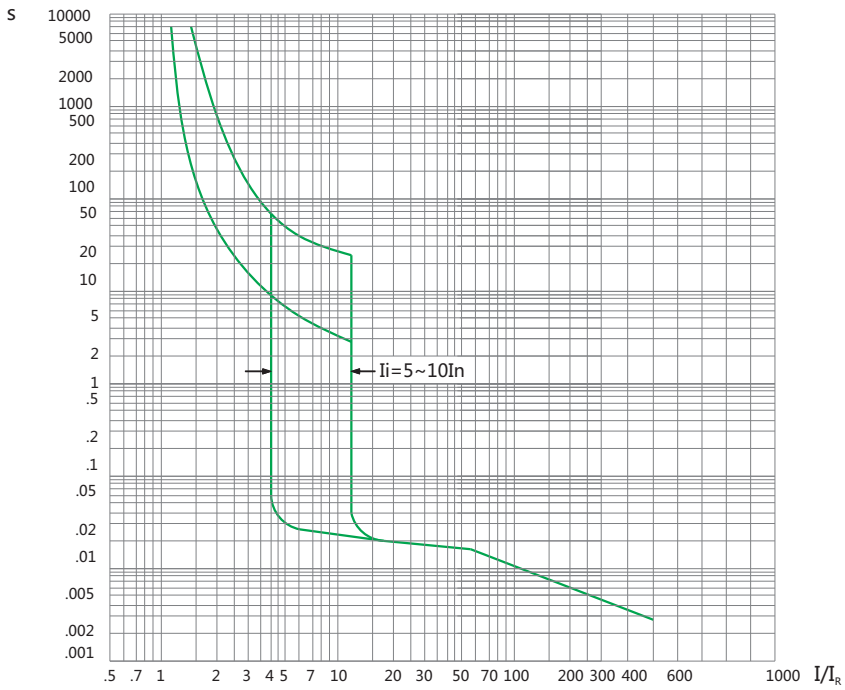

NM8-400, 630(250A~500A)

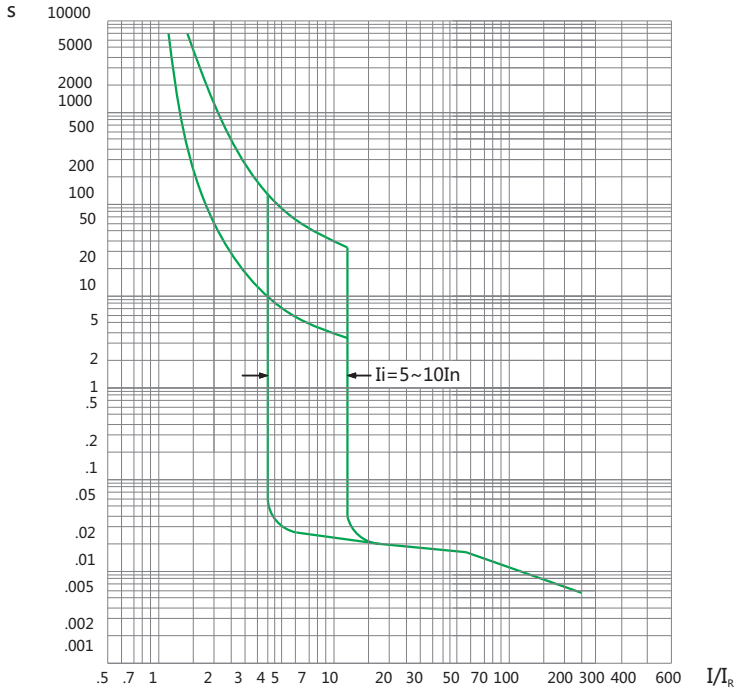

«Электро-Профи» - www.ep.ru

NM8-800(630~800A)
NM8-1250(630A~1250A)

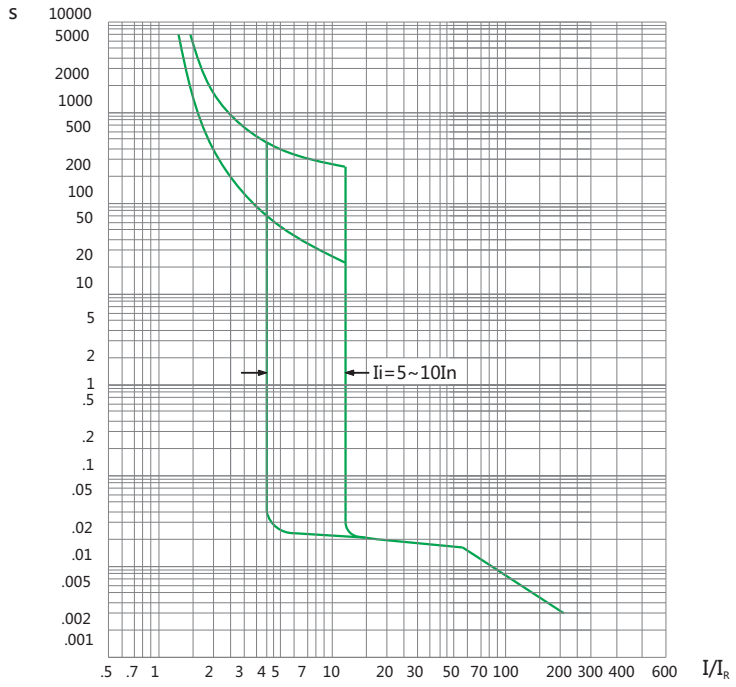

NM8S-125, 250(40A~250A)

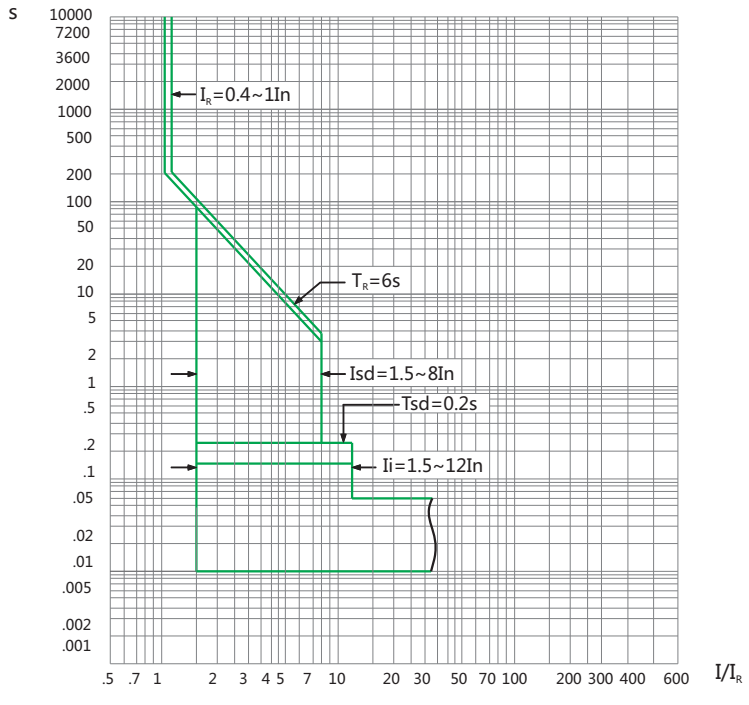

«Электро-Профи» - www.ep.ru

B

NM8S-400,630(250A~630A)
NM8S-800,1250(630A~1250A)
NM8S-1600(1000A~1600A)

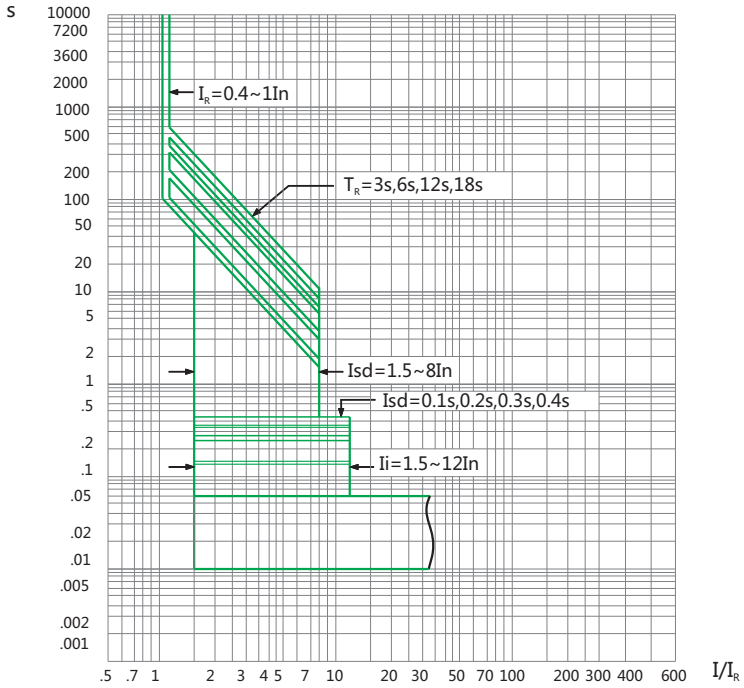

Motor protection release
NM8-125(16A~125A)

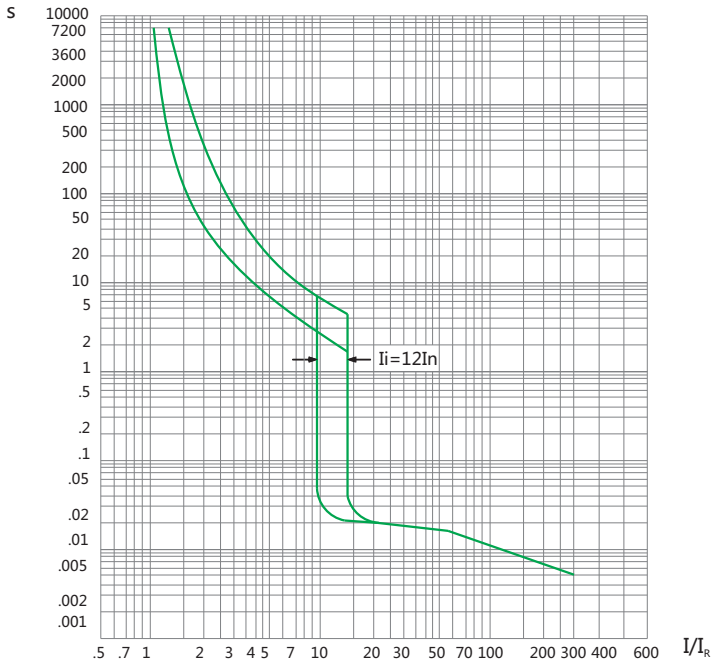

«Электро-Профи» - www.ep.ru

NM8-250(100A ~ 250A)

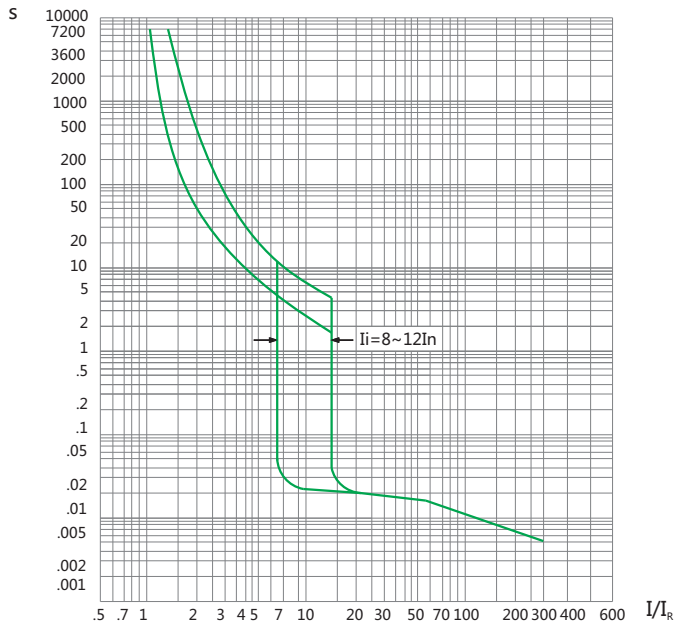

NM8-400,630(250A~500A)

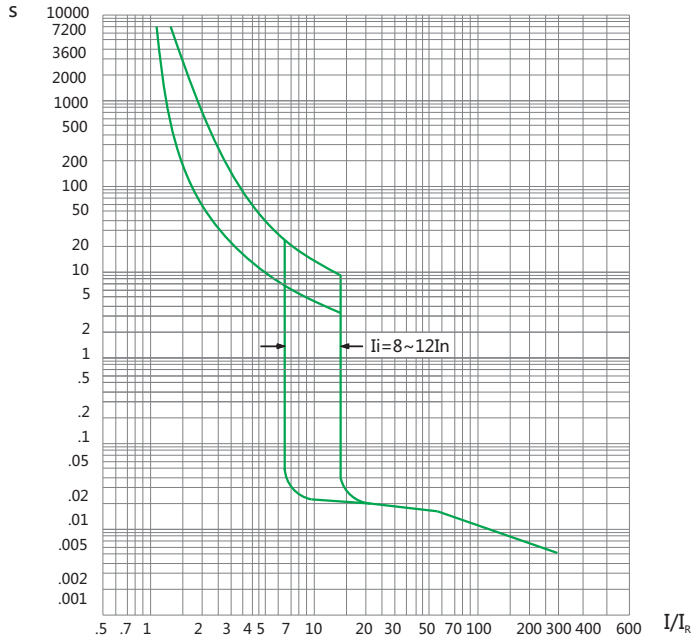

«Электро-Профи» - www.ep.ru

7.2 Temperature compensation

When the ambient temperature slightly changes, tripping characteristics will change as well, please refer to the table below for temperature compensation correction.

7.2.1 Temperature compensation coefficient of breaker with thermo-magnetic release as follows.

Ambient temperature	0℃	5℃	10℃	15℃	20℃	25℃	30℃	35℃	40℃	45℃	50℃	55℃	60℃	65℃	70℃
Temperature compensation coefficient	1.2	1.175	1.15	1.125	1.1	1.075	1.05	1.025	1.0	0.975	0.95	0.925	0.90	0.875	0.85

Note: For reference only

7.2.2 Temperature compensation coefficient of breaker with electronic release as follows

Frame Level rated current	0℃	5℃	10℃	15℃	20℃	25℃	30℃	35℃	40℃	45℃	50℃	55℃	60℃	65℃	70℃
NM8S-125S/H(40~125)	1	1	1	1	1	1	1	1	1	1	1	1	1	1	1
NM8S-250S/H(125~160)	1	1	1	1	1	1	1	1	1	1	1	1	1	1	1
NM8S-250S/H(200~250)	1	1	1	1	1	1	1	1	1	1	1	0.95	0.95	0.90	0.90
NM8S-630S/H/R(250~400)	1	1	1	1	1	1	1	1	1	1	1	0.98	0.95	0.93	0.90
NM8S-630S/H/R(500~630)	1	1	1	1	1	1	1	1	1	0.98	0.95	0.93	0.90	0.88	0.85
NM8S-1250S/H/R(630~800)	1	1	1	1	1	1	1	1	1	0.975	0.975	0.95	0.95	0.925	0.925
NM8S-1250S/H/R(1000~1250)	1	1	1	1	1	1	1	1	1	0.95	0.9	0.875	0.80	0.80	0.80
NM8S-1600S/H/R(1000~1600)	1	1	1	1	1	1	1	1	1	0.95	0.9	0.875	0.80	0.80	0.80

8. Mounting of circuit breaker

8.1 Modes of down-lead

Two modes of upper and lower down-lead are available; adoption of different down-lead modes will not affect normal operation of breaker, in addition, it is no need for derating.



8.2 Modes of mounting

Mounting modes following are available for fixed and plug-in type breakers.

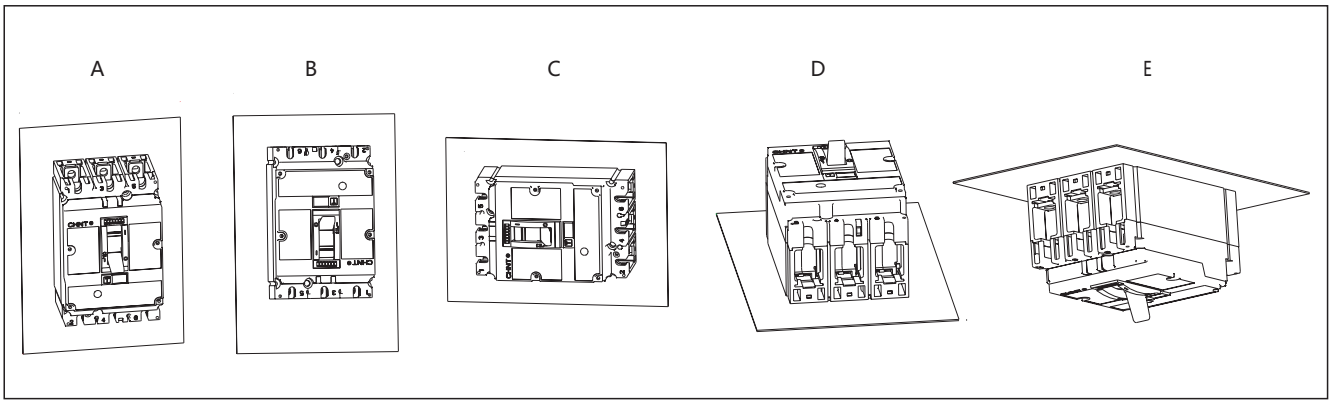

«Электро-Профи» - www.ep.ru

8.3 Modes of fixing

8.3.1 Fixing modes following are available for fixed and plug-in type breakers.

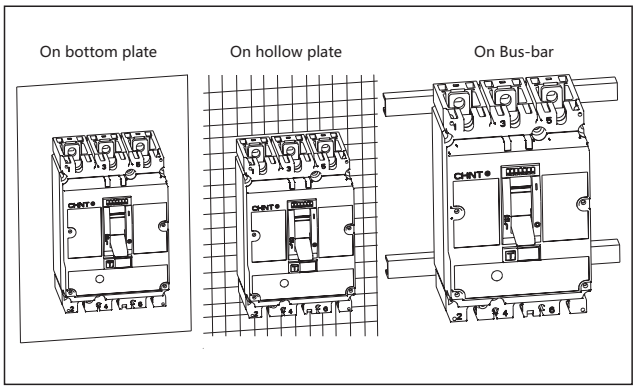

8.3.2 Fixing mode following is available for NM8(S)-125, 250 for fixed type breakers, which adopts DIN rail adaptor of front connection.

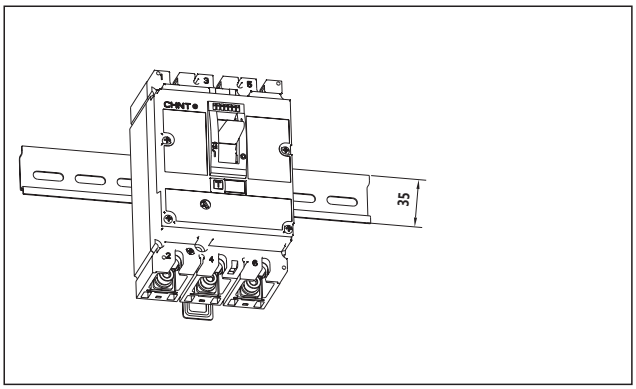

8.4 Secured distance

8.4.1 Min. Distance between breakers

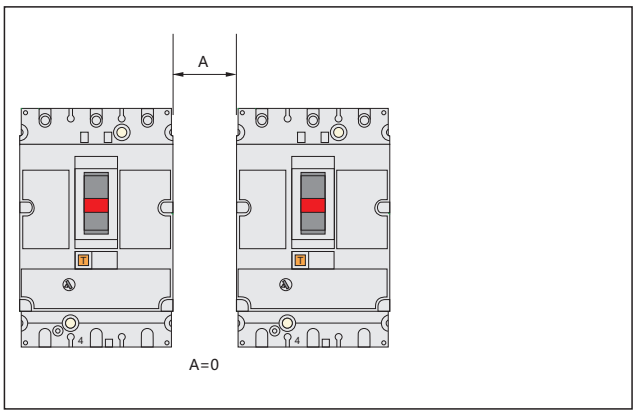

8.4.2 Min. distance between breaker and surface of switchgear where the operation handle is exposed.

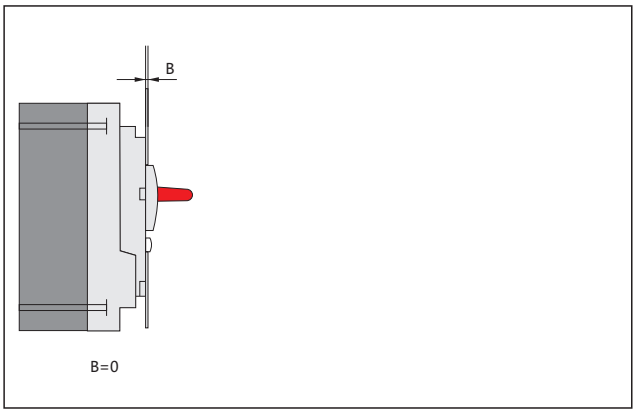

8.4.3 Min. distance between breaker and side of switchgear

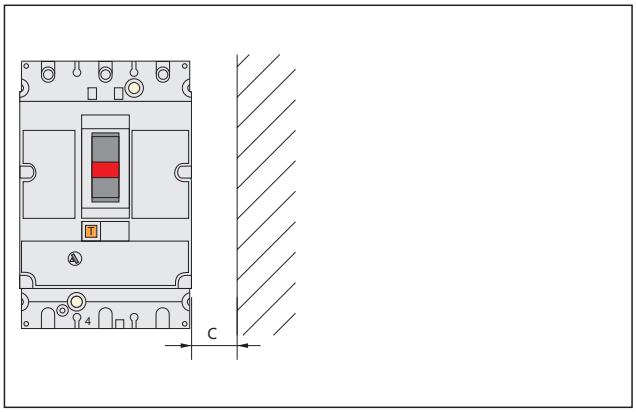

8.4.4 Min. distance between top and bottom of breaker

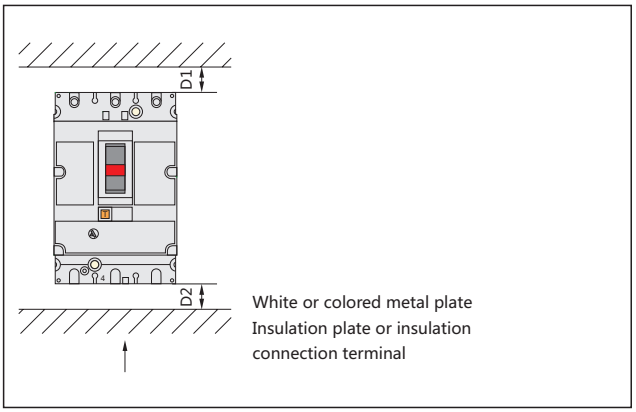

«Электро-Профи» - www.ep.ru

B

NM8 Breaker	Ue	C	Insulation plate or insulation connection terminal(mm)		White or colored metal plate(mm)	
			D1	D2	D1	D2
NM8-125 NM8S-125	Ue≤440V	10	30	30	35	35
	Ue<600V	20	30	30	35	35
	Ue≥600V	30	30	30	35	35
NM8-250 NM8S-250	Ue≤440V	10	30	30	35	35
	Ue<600V	20	30	30	35	35
	Ue≥600V	30	30	30	35	35
NM8-400, 630, NM8S-400, 630	Ue≤440V	10	30	30	60	60
	Ue<600V	20	30	30	60	60
	Ue≥600V	30	30	30	100	100
NM8-800, 1250, NM8S-800, 1250, 1600	Ue≤690V	50	130	100	70	70

Note: when voltage is ≥500V, extended terminal cover should be mounted

8.5 Modes of connection

8.5.1 Cable connection plug and Copper busbar

a. Screw is used to connect with copper (aluminum) cable connection plug or copper busbar

Size of connection screw

NM8-125: M6

NM8S-125, NM8-250, NM8S-250: M8

NM8-400, 630, NM8S-400, 630: M10

NM8-800, 1250, NM8S-800, 1250: M10

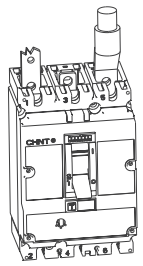

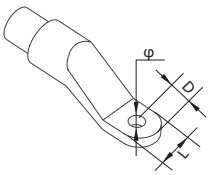

Copper cable connection plug

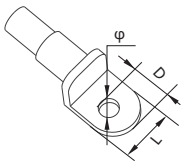

Aluminum cable connection plug

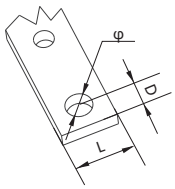

Copper busbar

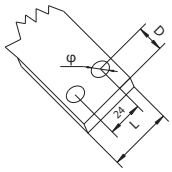

Copper busbar [NM8(S)-1250]

Dimension	NM8-125	NM8S-125 NM8-250 NM8S-250	NM8-400, 630 NM8S-400, 630	NM8-800, 1250 NM8S-800, 1250, 1600
Distance between different poles(mm)	30	35	45	70
L(mm)	≤15	≤25	≤32	≤ 50
D(mm)	≤7	≤10	≤16	≤ 16
Φ(mm)	> 6	> 8	> 10	> 11

«Электро-Профи» - www.ep.ru

b. With front connection and use screw to connect
with copper (aluminum) cable connection plate or copper busbar
Size of connection screw
NM8-125: M6
NM8S-125, NM8-250, NM8S-250: M8
NM8-400, 630, NM8S-400, 630: M12
NM8-800, 1250, NM8S-800,1250,1600: M10

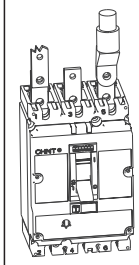



Front connection plate



Front connection plate

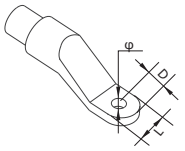

Copper cable connection plug

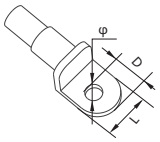

Aluminum cable connection plug

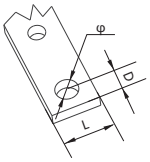

Copper busbar

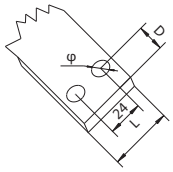

Copper busbar [NM8(S)-1250]

Dimension	NM8-125	NM8S-125 NM8-250 NM8S-250	NM8-400, 630 NM8S-400, 630		NM8-800, 1250 NM8S-800, 1250, 1600
Distance between different poles(mm)	30	35	52.5	70	70
L(mm)	≤ 15	≤ 25	≤ 40	≤ 60	≤ 50
D(mm)	≤ 7	≤ 10	≤ 20	≤ 20	≤ 16
Φ(mm)	> 6	> 8	> 12	> 12	> 11

8.5.2 Connection of bare cable

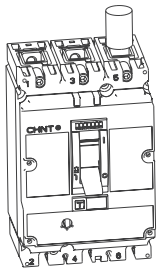

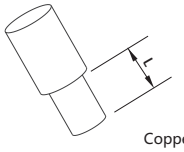

Copper or aluminum cable









«Электро-Профи» - www.ep.ru

Dimension	NM8-125	NM8S-125 NM8-250 NM8S-250
L(mm)	16	20
CSA(mm^2)	2.5~50	2.5~185

Dimension	NM8-400, 630 NM8S-400, 630		
Number of cable	1	2	4
L(mm)	26	30, 60	30
CSA(mm^2)	35~370	35~185	35~125

8.5.3 Rear connection

For rear connection, cable connection plug should be used for connection with copper busbar.

Rear connection

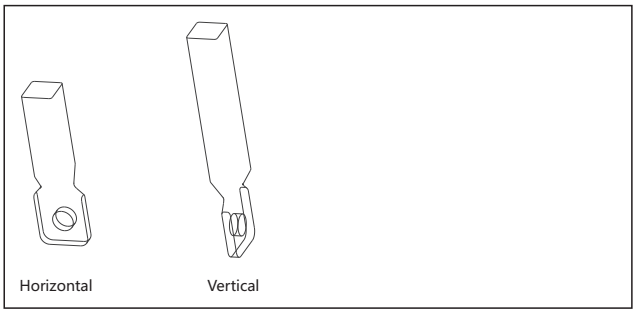

8.5.4 Plug-in type connection

Two modes of front and rear connection are available; for rear connection, upper limit or lower limit connection is used.

Plug-in type

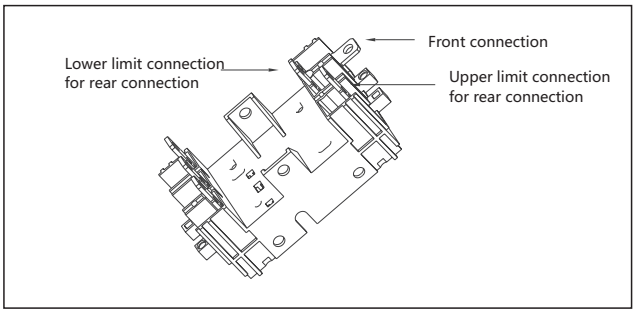

8.5.5 Standard CSA of copper cable or busbar used for connection

Rated current(A)		16	20	25	32	40	50	63	80	100	125	160	200	250	315	350	400	500	630	700	800	1000	1250	1600
Cross section area (mm^2)	Copper cable	2.5	2.5	4.0	6.0	10	10	16	25	35	50	70	95	120	185	185	240	2×150	2×185	2×240	2×240	-	-	-
	Copper busbar	-	-	-	-	-	-	-	-	-	-	-	-	-	-	-	-	2×30×5	2×40×5	2×50×5	2×50×5	2×60×5	2×80×5	2×80×5

8.5.6 Usual cross sections for conductors according intensity

In(A)	Copper conductors	Copper bar
	Cross Section Area (mm^2)	Dimensions Area (mm^2)
10	1.5	—
16	2.5	—
20	2.5	—
25	4	—
32	6	—
40	10	—
63	16	—
80	25	—
100	35	—
125	50	—
160	70	—
200	95	—
250	120	—
315	185	—
400	240	—
500	2×150	2×30×5
630	2×185	2×40×5
800	2×240	2×50×5
1000	—	2×60×5
1250	—	2×80×5
1600	—	2×80×5

«Электро-Профи» - www.ep.ru

8.6 Overall and Mounting Dimensions

8.6.1 Overall and mounting dimensions of fixed type for front connection

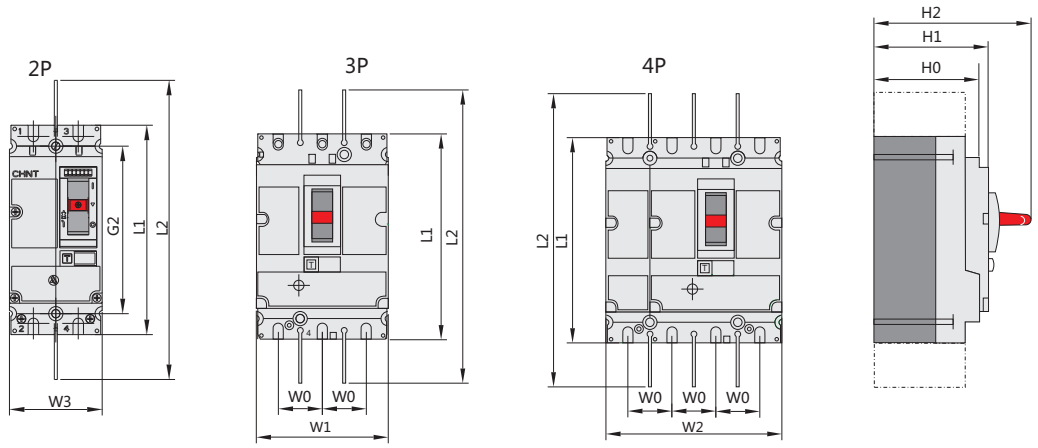

Plate mount

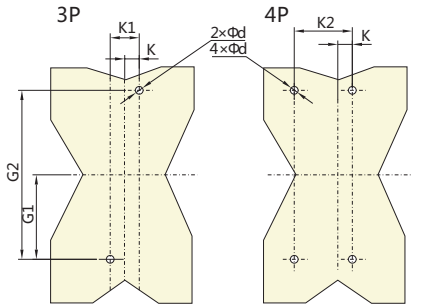

Bar mount

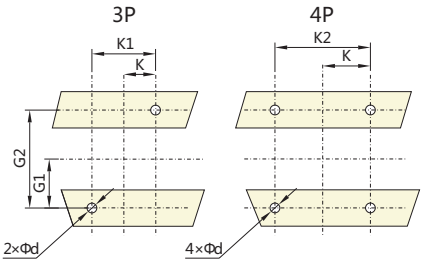

DIN rail mount[NM8(S)-125,250]

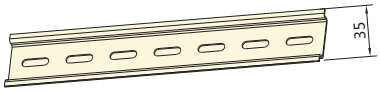

(mm)

Model	L1	L2	H0	H1	H2	K	K1	K2	G1	G2	W0	W1	W2	W3	d
NM8-125	140	243	72	79	108	15	30	60	56	112	30	90	120	62	5.5
NM8S-125/NM8-250/NM8S-250	157	273	82	88	126	17.5	35	70	62.5	125	35	105	140	70	5.5
NM8-400, 630/NM8S-400, 630	255	482	109	113	168	22.5	45	90	100	201.5	45	140	185	-	5.5
NM8-800, 1250/NM8S-800, 1250	370	565	141	145	206	35	70	140	120	240	70	210	280	-	7
NM8S-1600	370	565	137	151	211	35	70	140	120	240	70	210	280	-	7

8.6.2 Overall and mounting dimensions of fixed type for rear connection

Plate mount

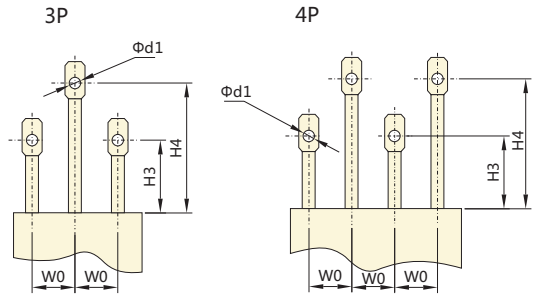

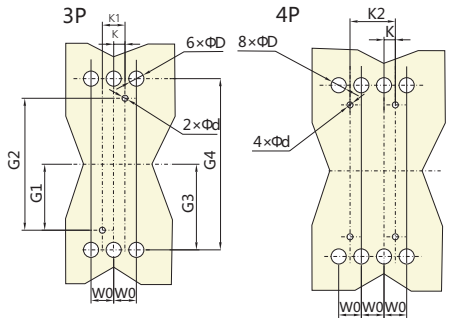

«Электро-Профи» - www.ep.ru

B

(mm)

Model	H3	H4	W0	K	K1	K2	G1	G2	G3	G4	d	d1	D
NM8-125	47	87	30	15	30	60	56	112	63	126	5.5	6.5	15
NM8S-125/NM8-250/NM8S-250	47	87	35	17.5	35	70	62.5	125	70	140	5.5	8	20
NM8-400,630/NM8S-400,630	50	100	45	22.5	45	90	100	200	113.5	227	6	13	32

8.6.3 Overall and mounting dimension of plug-in type

Plate mount

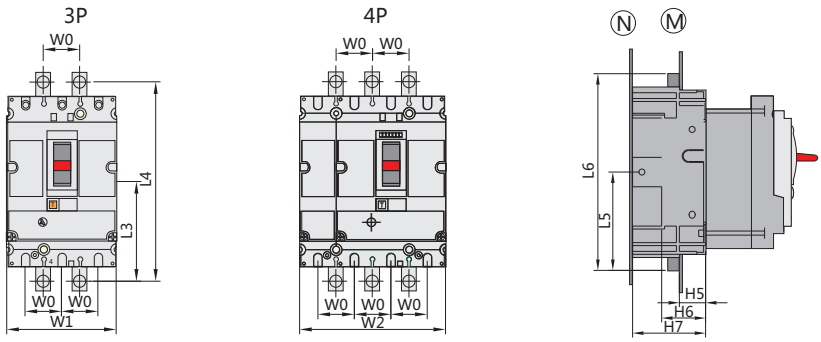

Plate mountⓂ

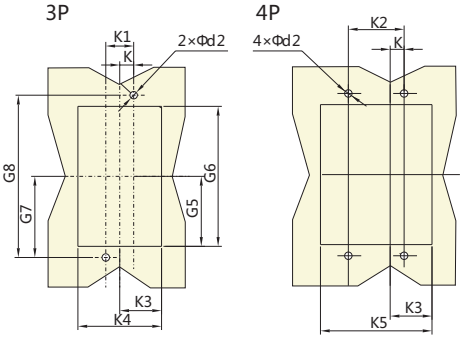

Plate mount Ⓝ front connection
Insulation barrier must be mounted
between mounting plate and breaker base

Bar mount

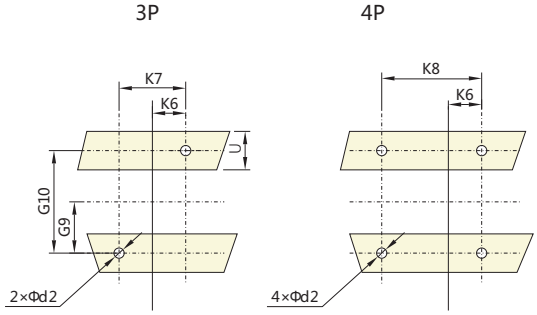

(standard configuration)
Plate mount Ⓝ rear connection
Mounting plate and breaker base must be used with insulation material

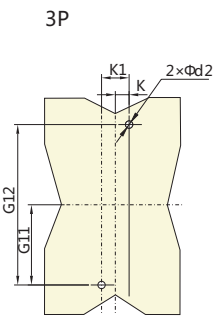

Lower limit

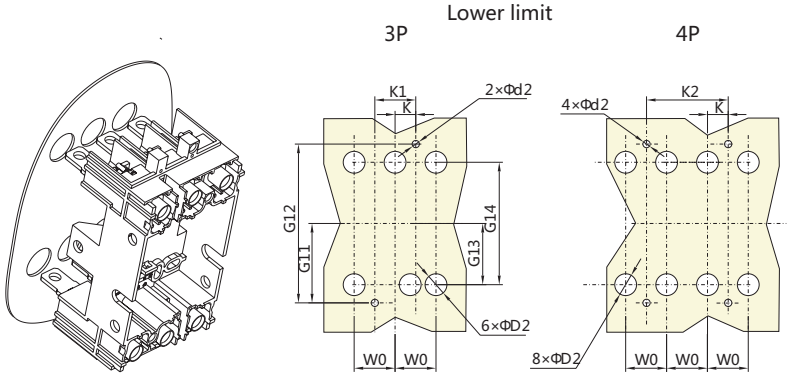

«Электро-Профи» - www.ep.ru

Note: Plug-in type rear connection, use insulated mounting base plate

Upper limit

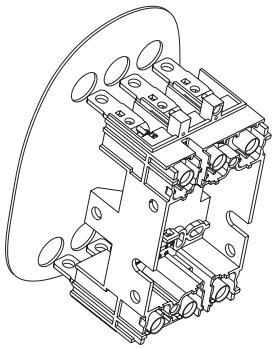

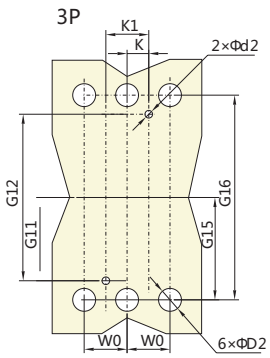

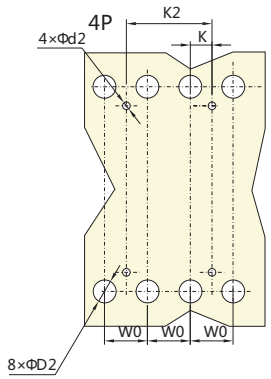

(mm)

Model	W0	W1	W2	L4	L5	L6	H5	H6	H7	K	K1	K2	K3	K4	K5	K6	K7
NM8-125	30	90	120	170.5	90	180	24	40	67	15	30	60	47	94	124	30	60
NM8S-125/NM8-250/NM8S-250	35	105	140	190	102.5	205	27	45	75	17.5	35	70	54.5	109	144	35	70
NM8-400, 630/NM8S-400, 630	45	140	185	300	157.5	315	27	45	100	22.5	45	90	71.5	143	188	45	90

Model	K8	G5	G6	G7	G8	G9	G10	G11	G12	G13	G14	G15	G16	d2	D2	U
NM8-125	90	77	154	85.2	170.4	32.5	65	68	136	54.5	109	70.5	141	6	20	≤32
NM8S-125/NM8-250/NM8S-250	105	87	174	95	190	37.5	75	77.5	155	61	122	79	158	6	25	≤32
NM8-400, 630/NM8S-400, 630	140	137	274	150	300	75	150	125	250	101	202	126	252	6	35	≤32

8.6.4 Flush type (for fixed or plug-in type)

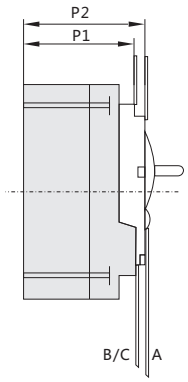

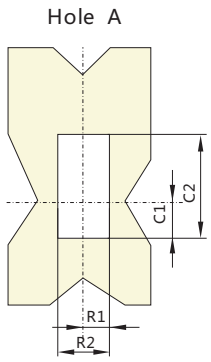

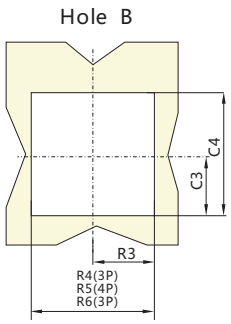

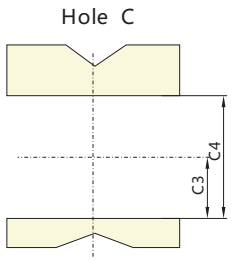

(mm)

Model	P1	P2	R1	R2	R3	R4	R5	R6	C1	C2	C3	C4
NM8-125	73	80	13	26	46.5	93	123	65	26	68	50.5	101
NM8S-125/NM8-250/NM8S-250	83	90	14.5	29	54	108	143	73	33	78	56.5	113
NM8-400, 630/NM8S-400, 630	109	114	26.5	53	71.5	143	188	-	41.5	116	108	205
NM8-1250/NM8S-1250	103	145	41	82	107	214	284	-	90	131	125	250

«Электро-Профи» - www.ep.ru

B

9. Accessories

9.1 Inner accessories

9.1.1 Shunt release

Us=70~110%Us, circuit breaker reliably operates

Long-time electrification is prohibited

Time of response: pulsive type≥20ms, ≤60ms

9.1.2 Under-voltage release

Us=35~70%Ue, circuit breaker reliably breaks

Us≥85%Ue, circuit breaker reliably closes

Us < 35%Ue, prevent circuit breaker from making

Note: With under-voltage release, Us≥85%Ue, circuit breaker normally makes and breaks

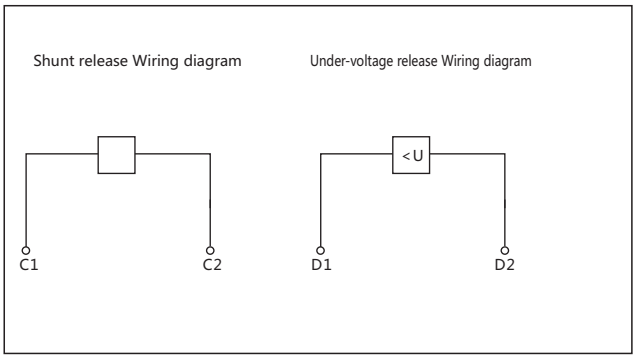

9.1.3 Auxiliary contact

Function: Indication of contacting status

Circuit breaker is at making status	F12, F14 — F11
Circuit breaker is at breaking status	F12, F14 — F11

Wiring diagram

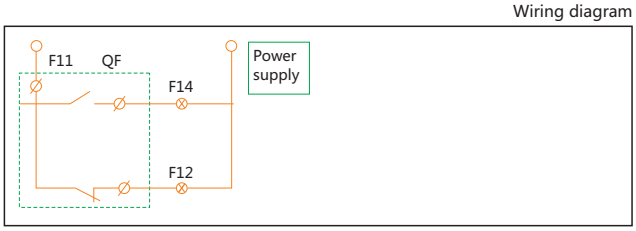

9.1.4 Alarm contact

Function: indication of reason for circuit breaker releasing;

* Over-load
* Short-circuit
* Grounding fault
* Operation of under-voltage releasing or free tripping

When circuit breaker normally makes and breaks, alarm contact not operates.

After free tripping(or tripping due to failure), alarm contact operates and after the circuit breaker again normally operates, alarm contact recovers original status.

Circuit breaker is at breaking or making status	B12, B14 — B12
Circuit breaker is at free release (or alarming)status	B12, B14 — B11

Wiring diagram

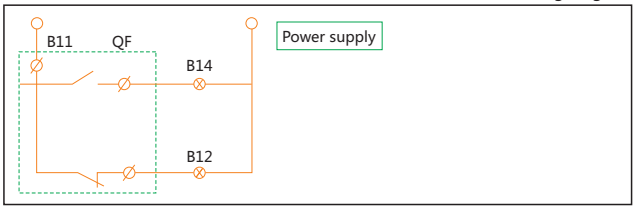

«Электро-Профи» - www.ep.ru

Accessory	Code	Mounting and wiring mode 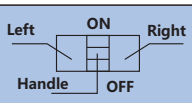		
		NM8-125, 250 NM8S-125, 250	NM8-400, 630 NM8S-400, 630	NM8-800, 1250 NM8S-800, 1250,1600
		3P, 4P	3P, 4P	3P, 4P
No accessory				
Alarm contact	AL			
Shunt release	SM: AC220V, SQ: AC380V SB: DC24V			
Auxiliary contact	AX			
Under-voltage release	UM: AC220V UQ: AC380V			
Shunt release Auxiliary contact	SM: AC220V, SQ: AC380V, SB: DC24V AX			
Two groups of auxiliary contact	AX, AX			
Auxiliary contact Under-voltage release	AX UM: AC220V, UQ: AC380V			
Shunt release Alarm contact	SM: AC220V, SQ: AC380V, SB: DC24V AL			
Auxiliary contact Alarm contact	AX AL			
Under-voltage release Alarm contact	AL			
Shunt release Auxiliary contact, alarm	SM: AC220V, SQ: AC380V, SB: DC24V AX, AL	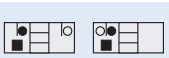		
Two groups of auxiliary contact	AX, AX AL			
Alarm contact Auxiliary contact, alarm contact Under-voltage release	AX, AL (UM: AC220V, UQ: AC380V)			

■-Shunt release ▲-Under-voltage release ○-Auxiliary contact ●-Alarm contact

Note: 1: For NM8-125, 250, 400, 630, NM8S-125, 250, 400, 630, under-voltage and shunt release couldn't be simultaneously equipped on one breaker.

2: For NM8-800, 1250, NM8S-800, 1250, 1600, at most three auxiliary contacts could be equipped, under-voltage and shunt release could be simultaneously equipped on one breaker, in addition, their positions could be exchanged.

«Электро-Профи» - www.ep.ru

B

9.2 External accessories

9.2.1 Economic extended rotary handle

Protection degree: IP30

Functions: Isolation function indication;

0(breaking), 1(making)and free tripping indication;

At "OFF" status, the breaker can be fitted with 1-3 padlocks with a diameter of 5-8mm(by customer), This prevents the door of switchgear being opened unwantedly.

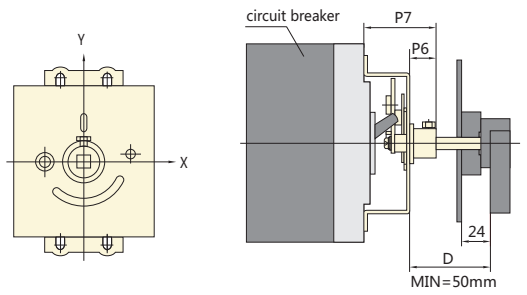

(mm)

Dimension	NM8-125	NM8S-125, NM8-250, NM8S-250	NM8-400, NM8S-400	NM8-630, NM8S-630	NM8(S)-800	NM8(S)-1250,1600
P6	18	18	18	18	18	18
P7	55	55	72	72	95.5	95.5
P8	65	65	126	126	170	170



Handle mounting (mm)

NM8(S)-125,250,400,630

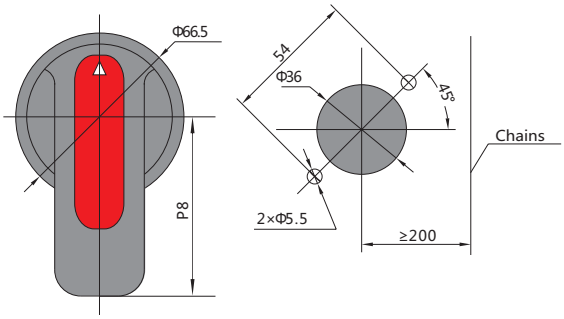

NM8(S)-800,1250,1600

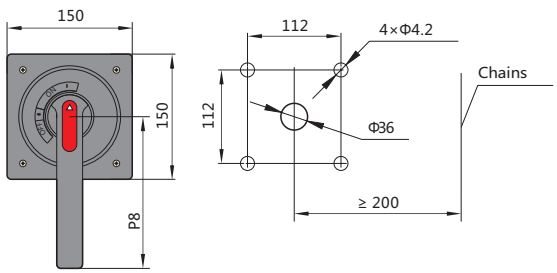

«Электро-Профи» - www.ep.ru

9.2.2 Direct rotary handle

Protection degree : IP40

Functions:

Reliable insulation;

Isolation function indication;

0(breaking), 1(making) and free tripping indication;

Realize free tripping of circuit breaker;

At "OFF" status, the breaker can be fitted with 1-3 padlocks with a diameter of 5~8mm (by customer).



Direct rotary handle

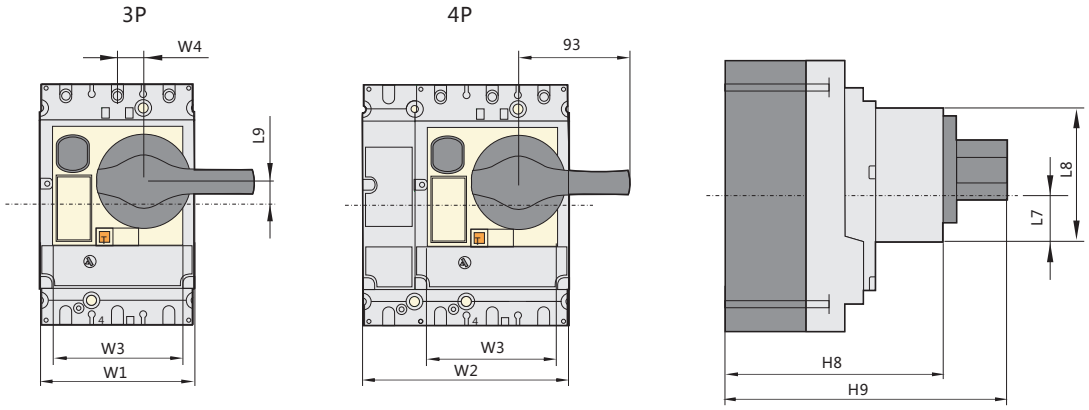

Front boring(fixed or plgu-in circuit breaker)(mm)

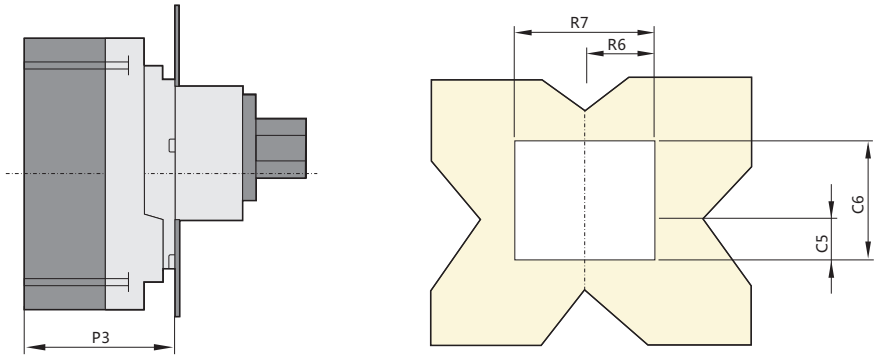

«Электро-Профи» - www.ep.ru

B

9.2.3 Extended rotary handle

Protection degree: IP55

Functions:

Reliable insulation;

Isolation function indication;

0(breaking), 1(making) and free tripping indication;

When the door is open, the release can be set and the breaker will not make;

At "OFF" status, the breaker can be fitted with 1~3 padlocks with a diameter of 5~8mm (by customer). Then door of the switchgear can be opened.



Front boring(fixed or plug-in circuit breaker)(mm)

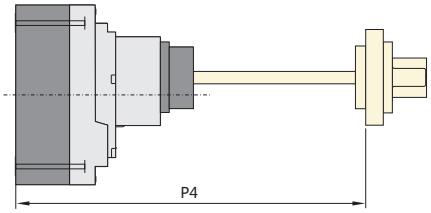

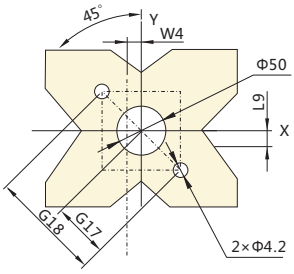

(mm)

	W1	W2	W3	W4	L7	L8	L9	H8	H9	P3	P4	R6	R7	C5	C6	G17	G18
NM8-125	90	120	76	15.25	37	70	13.3	115	163	80	≥175 ≤600	38	76	38	70	37	74
NM8S-125 NM8-250 NM8S-250	105	140	93.5	15.5	39	77.5	9	126	174	90	≥175 ≤600	46.5	93	40.5	76.5	37	74
NM8-400,630/ NM8S-400,630	140	185	122	18	69	121.5	24.5	152	200	115	≥175 ≤600	61	122	70.5	121	37	74

9.2.4 Motor-driven mechanism

Protection degree: IP40

Functions:

Reliable insulation;

Isolation function indication;

0(breaking), 1(making) and free tripping indication;

Free releasing of circuit breaker;

Making and breaking the breaker manually or automatically

Manual operation

Turn "manual/auto" switch to "auto" position and then turn the handle to make and break the breaker.

Automatic operation:

Turn "manual/auto" switch to "manual" position and then push the button to make and break the breaker remotely. The make/break operation is carried out via pulse or self-retaining type signal control.

Operational range: 85%Un~110%Un.



«Электро-Профи» - www.ep.ru

NM8 circuit breaker	Rated control voltage	Electrical life	Operational current	Power consumption
NM8-125	AC/DC 110V AC230/DC 220V AC 380V	10,000 operations	≤0.5 A	14VA 14W 14W
NM8S-125 NM8-250 NM8S-250	AC230/DC 220V AC 380V	10,000 operations	≤0.5 A	14VA 14W 14W
NM8-400 NM8S-400 NM8-630 NM8S-630	AC/DC 110V AC230/DC 220V AC 380V	5,000 operations	≤2 A	35VA 35VA 35W 35W 35W
NM8-800 NM8S-800 NM8-1250 NM8S-1250	AC/DC 110V AC230/DC 220V AC 380V	3,000 operations	≤7.5 A	200W

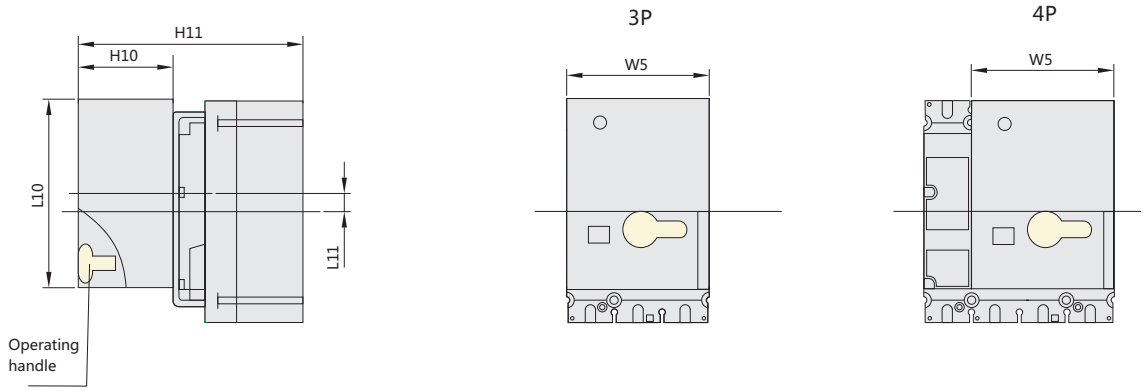

Front boring(fixed or plug-in circuit breaker)

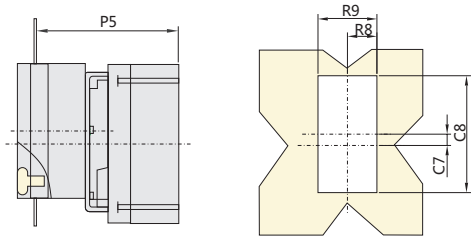

Wiring diagram

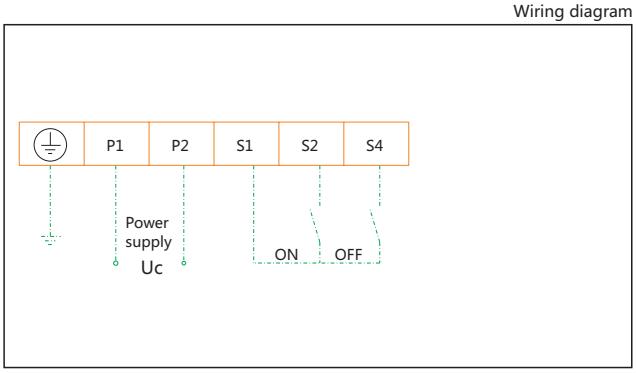

(mm)

Model	W5	H10	H11	L10	L11	R8	R9	P5	C7	C8
NM8-125	90	77	164	117	17.3	46.5	93	144	17.3	120
NM8S-125, NM8-250, NM8S-250	90	77	175	117	14.5	46.5	93	155	14.5	120
NM8(S)-400, 630	130	115	250	175	19	65	130	225	19	180
NM8(S)-800, 1250	130	115	295	175	47.5	65	130	270	47.5	180

«Электро-Профи» - www.ep.ru

B

9.3 Locking system

Locking the breaker at status of making or breaking.

The system can be fitted with 1~3 padlocks with a diameter of 5~8mm (by customer).

9.4 Terminal cover

Protection degree: IP40

Protect from being contacted with main circuit.

Selection of terminal cover:

Fixed breaker (front connection): Long terminal cover; Fixed breaker (rear connection): Short terminal cover;

Plug-in breaker: short terminal cover; When voltage is ≥500V, terminal cover selected for definite connection mode

Locking system



Long terminal cover



Short terminal cover



10. COMA-2 communication module



10.1 General

COMA-2 communication module is the interface module for our intelligent MCCB and bus communication system, suitable for NM8S series of intelligent MCCB, operating communication level conversion and relay control output.

Combined with the Modbus-RTU communication protocol, the communication module can easily connect with Fieldbus master device to realize telemeter, and the remote control function.

10.2 Technical parameter

Rated voltage: AC230V, AC400V or DC24V (range of error 15%)

Communication type: RS485 (Modbus protocol)

Contact capacity: AC250V /15A

Transmission medium: shielded twisted pair line

Transmission distance: 12km (using A level of shielded twisted pair line)

Working state instructions: LED instructions

Station number: 2 stations

10.3 Dimensions of product and installation

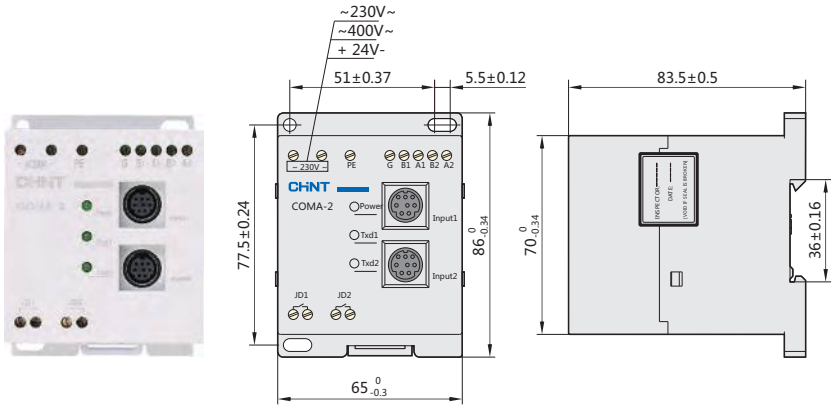

10.4 Solutions for communication

Solution	Function	Product and accessories	Remark
Solution 1	Telemetering	NM8S MCCB COMA-2	Read phase current
Solution 2	Telemetering+Telesignalisation	NM8S MCCB COMA-2 Auxiliary contact	Read phase current Indicate the status of MCCB
Solution 3	Telemetering+Telesignalisation+Telecommand	NM8S MCCB COMA-2 Auxiliary contact Motor-driven mechanism	Read phase current Indicate the status of MCCB Remote control Mccb switch on and off

«Электро-Профи» - www.ep.ru

11. Complementary technical information

11.1 Isolation function

Isolation functions of all the circuit breakers as per IEC60947/EN60947-2; Isolating position of contactors is at 0 (OFF) status. The operating handle will correctly indicate the status of 0(OFF), only if the contactor breaks.

Padlocks could be mounted after the contacts breaks;

Operation of isolation functions will realize following points:

- Contacts operation correctly indicates: operating reliability of interior mechanism;
- No residual current;
- Higher impulse withstands voltage for terminals at the power supply side and on-load side.

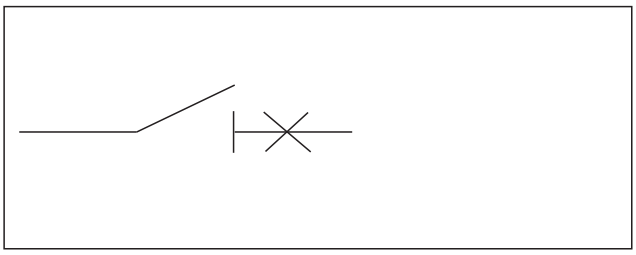

11.2 Current-limiting

11.2.1 Current-limiting capacity

The current-limiting capacity of a circuit breaker is its aptitude to limit short-circuits current. By occurring of short-circuit, the breaker is able to limit I^2t in time so as to protect circuits and switchgear at downstream.

The exceptional limiting capacity of NM8 series is due to the rotating double-break technique, which is characterized by very rapid natural repulsion of contacts and the appearance of two arc voltages in series with a very steep wave front.

a. Exceptional current-limiting capacity is able to greatly reduce power caused by fault current so as to enhance breaking capacity of breaker to Ics=100%Icu;

b .The capacity has greatly released damages, which short-circuit current lay to apparatus;

c .The capacity has greatly lowered temperature-rise so as to lengthen service life of the cable;

d. The capacity has greatly reduced power so as to lessen distortion of contacts and bus bar;

e. The capacity has greatly decreased interruptions to apparatus nearby.

11.2.2 Current-limiting curves

The current-limiting capacity of a circuit breaker is expressed by two curves which are the prospective current and the actual short-circuit current.

Thermal stress (A^2S), i.e. the energy dissipated by the short-circuit current in a conductor with a resistance of 1Ω.

The table below indicates the maximum permissible thermal stresses for cables depending on their insulation, conductor (Cu or Al) and cross section area (CSA).

CSA values are given in mm^2 and thermal stresses in A^2S.

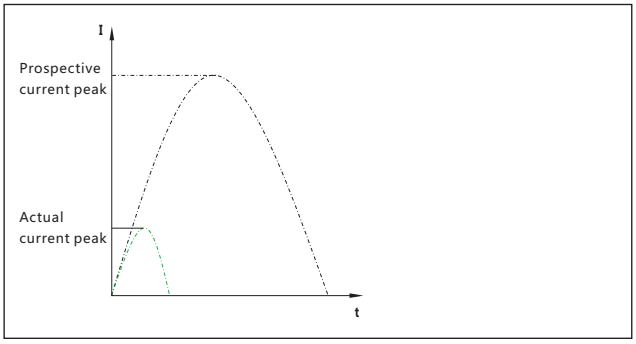

CSA(mm^2)		1.5	2.5	4	6	10	16	25	35
PVC	Cu K=115	2.97×10^4	8.26×10^4	2.12×10^5	4.76×10^5	1.32×10^6	3.40×10^6	8.26×10^6	1.62×10^7
	Al K=76	1.30×10^4	3.61×10^4	9.26×10^5	2.08×10^5	5.78×10^6	1.48×10^6	3.16×10^6	7.08×10^7
Butyl	Cu K=131	3.86×10^4	1.07×10^5	2.75×10^4	6.18×10^4	1.72×10^4	4.39×10^4	1.07×10^4	2.10×10^4
	Al K=87	1.70×10^4	4.73×10^4	1.21×10^4	2.72×10^4	7.57×10^4	1.94×10^4	4.73×10^4	9.27×10^4
EPR	Cu K=143	4.60×10^4	1.28×10^4	3.27×10^4	7.36×10^4	2.04×10^4	5.23×10^4	1.28×10^4	2.51×10^4
	Al K=94	1.99×10^4	5.52×10^4	1.41×10^4	3.18×10^4	8.84×10^4	2.26×10^4	5.52×10^4	1.08×10^4

CSA(mm^2)		50	70	95	120	150	185	240
PVC	Cu K=115	3.31×10^4	6.48×10^4	1.19×10^5	1.90×10^5	2.98×10^6	4.53×10^6	7.62×10^6
	Al K=76	1.44×10^4	2.83×10^4	5.21×10^5	8.32×10^5	1.30×10^6	1.98×10^6	3.33×10^6
Butyl	Cu K=131	4.29×10^4	8.41×10^5	1.55×10^4	2.47×10^4	3.86×10^4	5.87×10^4	9.88×10^4
	Al K=87	1.89×10^4	3.71×10^4	6.83×10^4	1.09×10^4	1.70×10^4	2.59×10^4	4.36×10^4
EPR	Cu K=143	5.11×10^4	1.00×10^4	1.85×10^4	2.94×10^4	4.60×10^4	7.00×10^4	1.18×10^4
	Al K=94	2.21×10^4	4.33×10^4	7.97×10^4	1.27×10^4	1.99×10^4	3.02×10^4	5.09×10^4

«Электро-Профи» - www.ep.ru

B

K is quoted from GB-50054 code for design of low voltage electrical installations.

Example:

a.What is the actual current when a prospective short-circuit current of 125kA rms (peak value=275kA) comes through the current-limiting operation circuit breaker at upstream of NM8-125R

Answer: the peak value=23kA; (for details, refer to current-limiting curves)

b.Is a Cu/PVC cable with a CSA of 10mm^2 adequately protected by a NM8-125S circuit breaker

Answer: the table above indicates that the permissible thermal stress is 1.32×10^6 A^{2}S at the point where a NM8-125S (Icu=50kA) is installed, and the short-circuit current is limited within the range of 1.32×106 A^{2}S, therefore the cable could be protected.

I^2 t Curve

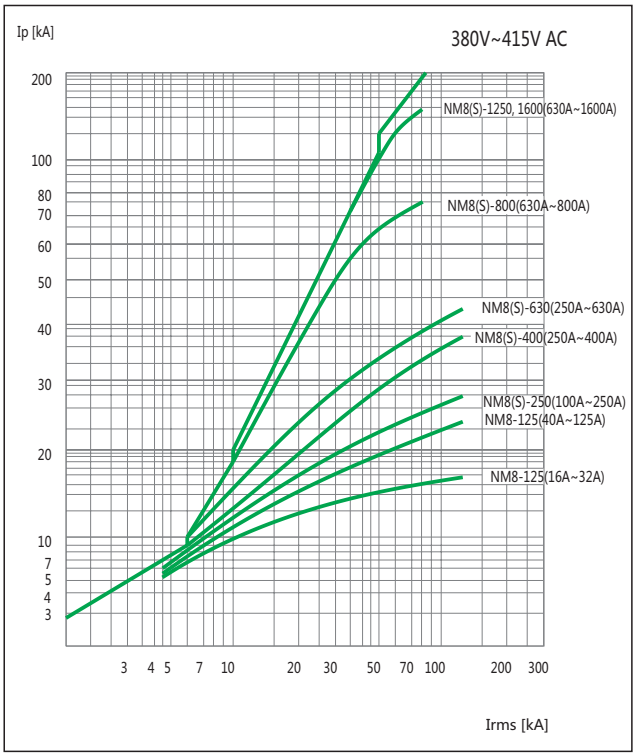

A^{2}s curve

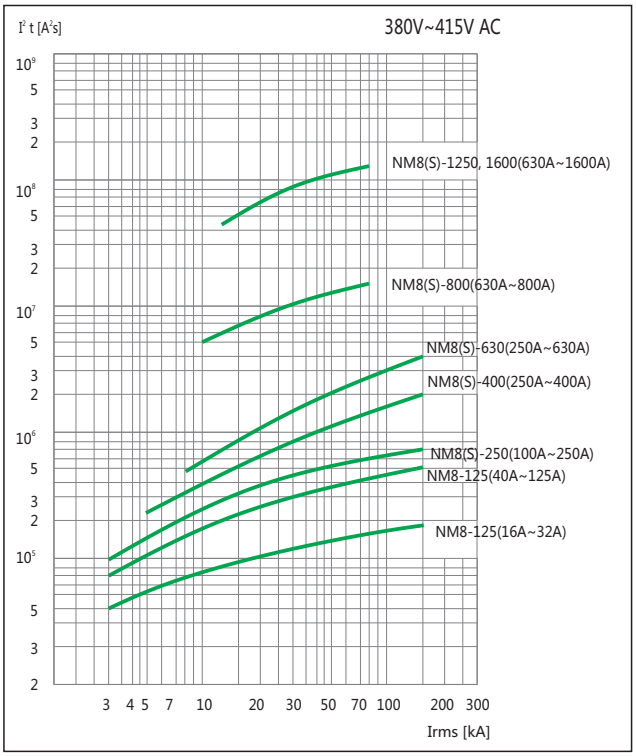

I^2 t Curve

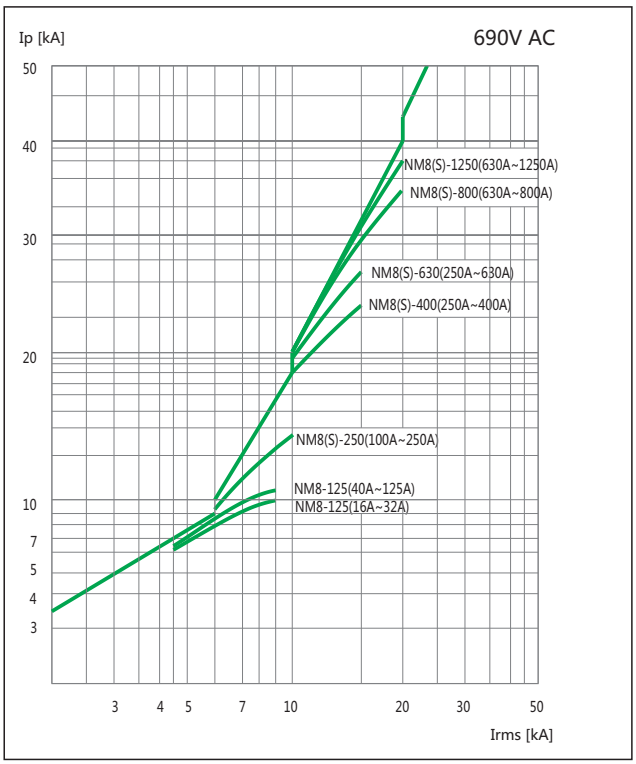

A^{2}s curve

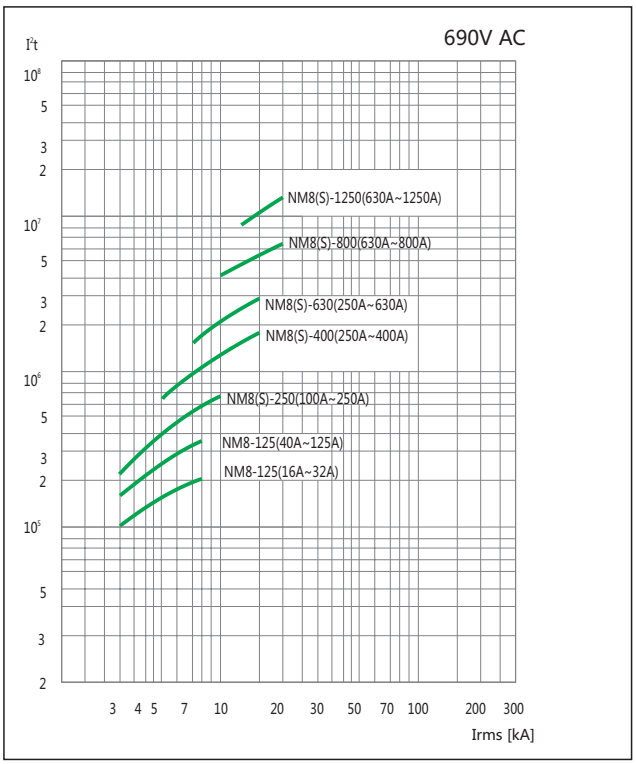

«Электро-Профи» - www.ep.ru

11.3 Power loss per pole

Resistance/ power loss mΩ/W	NM8-125	NM8S-125	NM8-250	NM8S-250	NM8-400	NM8S-400
16	7.1/1.8					
20	6.2/2.5					
25	4.8/3					
32	3.7/3.8					
40	2.6/4.2	0.85/1.4				
50	2.7/6.8	0.7/1.8				
63	1.7/6.7	0.7/2.8				
80	1.3/8.3	0.7/4.5				
100	0.85/8.5	0.5/5	1.0/10	0.5/5		
125	0.71/11.1	0.5/7.8	1.0/15.6	0.5/7.8		
160			0.55/14	0.36/9.2		
180			0.55/17.8	0.36/11.7		
200			0.55/22	0.36/14.4		
225			0.55/27.8	0.28/14.2		
250			0.55/34.4	0.28/17.5	0.3/18.8	0.15/9.4
315					0.28/27.8	0.15/14.9
350					0.28/34.3	0.15/18.4
400					0.24/38.4	0.15/24
500						
630						
700						
800						
1000						
1250, 1600						

11.4 Influences which altitude lay to tripping characteristics

To tripping characteristics of circuit breaker, it is no obvious influence, when the altitude does not exceed 2000m. Once the altitude exceeds the level of 2000m, factors of dielectric stress lowering and cooled air should be taken into consideration.

Altitude (m)	2000	3000	4000	5000
Dielectric stress (V)	3000	2500	2100	1800
Max. operational voltage (V)	690	550	480	420
Ratings at 40℃ (A)	1In	0.96In	0.93In	0.9In

«Электро-Профи» - www.ep.ru

NM8-630	NM8S-630	NM8-800	NM8S-800	NM8-1250	NM8S-1250,1600
0.3/18.8	0.13/8.1				
0.28/27.8	0.13/12.9				
0.28/34.3	0.13/15.9				
0.24/38.4	0.13/20.8				
0.2/50	0.13/32.5				
	0.13/51.6	0.04/15.9	0.04/15.9	0.04/15.9	0.04/15.9
		0.04/19.6	0.04/19.6	0.04/19.6	0.04/19.6
		0.04/25.6	0.04/25.6	0.04/25.6	0.04/25.6
				0.04/40	0.04/40
				0.04/62.5	0.04/62.5

11.5 Cascading

Definition of Cascading

Current-limiting technique has been adopted for cascading to install downstream circuit breaker with lower breaking capacity (cheaper circuit breakers) at the given point of circuit, and upstream NM8(S) circuit breaker operates to limit short-circuit current. Under the operation of cascading network, circuit breaker with lower breaking capacity compared with prospective short-circuit current at the given point could operate under normal short-circuit status. As the short-circuit current will be limited by upstream circuit breaker with current-limiting operation, cascading network is applicable to all the power distribution apparatus protection at downstream.

In addition, cascading operation is not restricted to operation of two switches in serial, but is applicable in various electric networks, as well.

Application of cascading

Through the application of cascading, connected apparatuses could be installed in different switchgears to realize normal operation. Therefore, cascading, in common, refers to various combination of circuit breakers installed at the given point of which the breaking capacity is lower than prospective short-circuit current. And breaking capacity of upstream circuit breakers should be equal to or higher than prospective short-circuit current at the installed point to protect apparatus at downstream. Cascading application is in conformity with IEC60947-2 standards.

«Электро-Профи» - www.ep.ru

Cascading (220/230/240V)
Upstream: NM8-125~1250
Downstream: DZ47, eB, UB, DZ158, DZ267, NB1, NBH8, NM8 (S)-125~1250

Upstream → Breaking capacity (kA rms)	**NM8-125S 85**	**NM8-125H 100**	**NM8-125R 150**	**NM8-250S 85**	**NM8-250H 100**	**NM8-250R 150**	**NM8-400S 85**
Downstream ↓	Breaking capacity (kA rms)						
DZ267	30	80	80	30	40	40	
DZ47, eB, UB	30	80	80	30	40	40	
NBH8	30	80	80	30	40	40	
NB1(Icn=6000A)	40	100	100	40	50	50	
NB1-63(Icn=10000A)	50	100	100	50	65	65	
DZ158-100	50	100	100	50	65	65	50
NM8-125S		100	150		100	150	
NM8-125H			150			150	
NM8-250S					100	150	
NM8-250H						150	
NM8-400S							
NM8-400H							
NM8-630S							
NM8-630H							
NM8-800S							
NM8-800H							
NM8-1250S							
NM8-1250H							
NM8S-125S		100	150		100	150	
NM8S-125H			150			150	
NM8S-250S					100	150	
NM8S-250H						150	
NM8S-400S							
NM8S-400H							
NM8S-630S							
NM8S-630H							
NM8S-800S							
NM8S-800H							
NM8S-1250S							
NM8S-1250H							

«Электро-Профи» - www.ep.ru

B

NM8-400H 100	NM8-400R 150	NM8-630S 85	NM8-630H 100	NM8-630R 150	NM8-800S 65	NM8-800H 100	NM8-1250S 65	NM8-1250H 100
65	65							
100	150		100	150		100		100
	150			150				
100	150		100	150		100		100
	150			150				
100	150		100	150		100		100
	150			150				
			100	150		100		100
				150				
						100		100
						100		100
100	150		100	150		100		100
	150			150				
100	150		100	150		100		100
	150			150				
100	150		100	150		100		100
	150			150				
			100	150		100		100
				150				
						100		100
						100		100

«Электро-Профи» - www.ep.ru

Upstream: NM8S-125~1600
Downstream: DZ267, DZ47, eB, UB, NBH8, NB1, DZ158, NM8(S)-125~1600

Upstream → Breaking capacity (kA rms)	NM8S-125S 85	NM8S-125H 100	NM8S-250S 85	NM8S-250H 100	NM8S-400S 85	NM8S-400H 100	NM8S-400R 150
Downstream ↓	Breaking capacity (kA rms)						
DZ267	30	80	30	40			
DZ47, eB, UB	30	80	30	40			
NBH8	30	80	30	40			
NB1(Icn=6000A)	40	100	40	50			
NB1(Icn=10000A)	50	100	50	65			
DZ158-100	50	100	50	65	50	65	65
NM8-125S		100		100		100	150
NM8-125H							150
NM8-250S				100		100	150
NM8-250H							150
NM8-400S						100	150
NM8-400H							150
NM8-630S							
NM8-630H							
NM8-800S							
NM8-800H							
NM8-1250S							
NM8-1250H							
NM8S-125S		100		100		100	150
NM8S-125H							150
NM8S-250S				100		100	150
NM8S-250H							150
NM8S-400S						100	150
NM8S-400H							150
NM8S-630S							
NM8S-630H							
NM8S-800S							
NM8S-800H							
NM8S-1250S							
NM8S-1250H							
NM8S-1600H							

«Электро-Профи» - www.ep.ru

NM8S-630S 85	NM8S-630H 100	NM8S-630R 150	NM8S-800S 65	NM8S-800H 100	NM8S-1250S 65	NM8S-1250H 100	NM8S-1600H 100
	100	150		100		100	100
		150					
	100	150		100		100	100
		150					
	100	150		100		100	100
		150					
	100	150		100		100	100
		150					
				100		100	100
				100		100	100
	100	150		100		100	100
		150					
	100	150		100		100	100
		150					
	100	150		100		100	100
		150					
	100	150		100		100	100
		150					
				100		100	100
				100		100	100
						100	100

«Электро-Профи» - www.ep.ru

Cascading (380/400/415V)
Upstream: NM8-125~1250;
Downstream: DZ47,eB, UB, DZ158, DZ267, NB1, NBH8, NM8(S)-125~1250

Upstream → Breaking capacity (kA rms)	**NM8-125S 50**	**NM8-125H 100**	**NM8-125R 150**	**NM8-250S 50**	**NM8-250H 100**	**NM8-250R 150**	**NM8-400S 70**
Downstream ↓	Breaking capacity (kA rms)						
DZ47, eB, UB	15	20	20	15	20	20	
NB1(Icn=6000A)	25	30	30	25	30	30	
NB1-63(Icn=10000A)	25	40	40	25	40	40	
DZ158-100	25	40	40	25	40	40	25
NM8-125S		100	150		100	150	70
NM8-125H			150			150	
NM8-250S					100	150	70
NM8-250H						150	
NM8-400S							
NM8-400H							
NM8-630S							
NM8-630H							
NM8-800S							
NM8-800H							
NM8-1250S							
NM8-1250H							
NM8S-125S		100	150		100	150	70
NM8S-125H			150			150	
NM8S-250S					100	150	70
NM8S-250H						150	
NM8S-400S							
NM8S-400H							
NM8S-630S							
NM8S-630H							
NM8S-800S							
NM8S-800H							
NM8S-1250S							
NM8S-1250H							

«Электро-Профи» - www.ep.ru

B

	NM8-400H 100	NM8-400R 150	NM8-630S 70	NM8-630H 100	NM8-630R 150	NM8-800S 50	NM8-800H 70	NM8-1250S 50	NM8-1250H 70
	40	40							
	100	150							
		150	70	100	150		70		70
	100	150			150				
		150	70	100	150		70		70
	100	150			150				
		150		100	150		70		70
					150				
				100	150		70		70
					150				
							70		70
							70		70
	100	150							
		150	70	100	150		70		70
	100	150			150				
		150	70	100	150		70		70
	100	150			150				
		150		100	150		70		70
					150				
				100	150		70		70
					150				
							70		70
							70		70

«Электро-Профи» - www.ep.ru

Upstream：NM8S-125~1250
Downstream：DZ267, DZ47, eB, UB, NBH8, NB1, DZ158, NM8（S）-125~1250

Upstream → Breaking capacity (kA rms)	NM8S-125S 50	NM8S-125H 100	NM8S-250S 50	NM8S-250H 100	NM8S-400S 70	NM8S-400H 100	NM8S-400R 150
Downstream ↓	Breaking capacity (kA rms)						
DZ47, eB, UB	15	20	15	20			
NB1(Icn=6000A)	25	30	25	30			
NB1-63(Icn=10000A)	25	40	25	40			
DZ158	25	40	25	40	25	40	40
NM8-125S		100		100		100	150
NM8-125H				100		100	150
NM8-250S				100		100	150
NM8-250H						100	150
NM8-400S						100	150
NM8-400H							150
NM8-630S							
NM8-630H							
NM8-800S							
NM8-800H							
NM8-1250S							
NM8-1250H							
NM8S-125S		100		100		100	150
NM8S-125H				100		100	150
NM8S-250S				100		100	150
NM8S-250H						100	150
NM8S-400S						100	150
NM8S-400H							150
NM8S-630S							
NM8S-630H							
NM8S-800S							
NM8S-800H							
NM8S-1250S							
NM8S-1250H							
NM8S-1600H							

«Электро-Профи» - www.ep.ru

NM8S-630S 70	NM8S-630H 100	NM8S-630R 150	NM8S-800S 50	NM8S-800H 70	NM8S-1250S 50	NM8S-1250H 70	NM8S-1600H 70
	100	150		70		70	70
	100	150		70		70	70
	100	150		70		70	70
	100	150		70		70	70
	100	150		70		70	70
	100	150		70		70	70
	100	150		70		70	70
		150		70		70	70
				70		70	70
				70		70	70
				70		70	70
				70		70	70
	100	150		70		70	70
	100	150		70		70	70
	100	150		70		70	70
	100	150		70		70	70
	100	150		70		70	70
	100	150		70		70	70
	100	150		70		70	70
		150		70		70	70
				70		70	70
				70		70	70
				70		70	70
				70		70	70
				70		70	70

«Электро-Профи» - www.ep.ru

11.6 Protection discrimination(selectivity)

Protection discrimination is a must factor in low-voltage power distribution design so as to ensure reliability and continuity for users' electricity utilization.

Whenever there is fault occurring in the electric network, the upstream breaker where the fault is occurring breaks.

Protection discrimination could be clarified into 3 kinds: Total protection discrimination, partial protection discrimination and no protection discrimination(refer to fig aside):

Total protection discrimination: For all kinds of current where the faults occurred, including the overload current and nonresistance current, breaker D2 breaks and breaker D1 keeps making status.

Partial protection discrimination: For a much lower current compared with where the fault occurred (the limit value of protection discrimination), breaker D2 breaks and breaker D1 keeps making status (total protection discrimination).

When the fault current is lower than limit value of protection discrimination, the upstream and downstream breakers are applicable to protection discrimination; when the fault current exceeds limit value of protection discrimination, the upstream and downstream breakers are not applicable to protection discrimination (no protection discrimination). And both of the breakers of D1 and D2 break.

Upstream: NM8-125~1250

Downstream: DZ267, DZ47, eB, UB, NBH8, NB1, DZ158

Upstream → / Downstream ↓ In (A) Ii (kA)		NM8-125 S/H/R										NM8-250 S/H/R			
		16	20	25	32	40	50	63	80	100	125	100	160	200	250
DZ267 C Curves	≤10	0.19	0.25	0.3	0.4	0.5	0.5	0.5	0.63	0.8	1.0	T	T	T	T
	16			0.3	0.4	0.5	0.5	0.5	0.63	0.8	1.0	T	T	T	T
	20					0.5	0.5	0.5	0.63	0.8	1.0	T	T	T	T
	25						0.5	0.5	0.63	0.8	1.0	T	T	T	T
	32							0.5	0.63	0.8	1.0	T	T	T	T
DZ47, eB, UB C Curves	≤10	0.19	0.25	0.3	0.4	0.5	0.5	0.5	0.63	0.8	1.0	T	T	T	T
	16			0.3	0.4	0.5	0.5	0.5	0.63	0.8	1.0	T	T	T	T
	20					0.5	0.5	0.5	0.63	0.8	1.0	T	T	T	T
	25						0.5	0.5	0.63	0.8	1.0	T	T	T	T
	32							0.5	0.63	0.8	1.0	T	T	T	T
	40								0.63	0.8	1.0	T	T	T	T
	50									0.8	1.0	T	T	T	T
	60										1.0	T	T	T	T
NBH8 B C Curves	≤10	0.19	0.25	0.3	0.4	0.5	0.5	0.5	0.63	0.8	1.0	T	T	T	T
	16			0.3	0.4	0.5	0.5	0.5	0.63	0.8	1.0	T	T	T	T
	20					0.5	0.5	0.5	0.63	0.8	1.0	T	T	T	T
	25						0.5	0.5	0.63	0.8	1.0	T	T	T	T
	32							0.5	0.63	0.8	1.0	T	T	T	T
	40								0.63	0.8	1.0	T	T	T	T
NB1 B C D Curves	≤10	0.19	0.25	0.3	0.4	0.5	0.5	0.5	0.63	0.8	1.0	T	T	T	T
	16			0.3	0.4	0.5	0.5	0.5	0.63	0.8	1.0	T	T	T	T
	20					0.5	0.5	0.5	0.63	0.8	1.0	T	T	T	T
	25						0.5	0.5	0.63	0.8	1.0	T	T	T	T
	32							0.5	0.63	0.8	1.0	T	T	T	T
	40								0.63	0.8	1.0	T	T	T	T
	50									0.8	1.0	T	T	T	T
	63									0.8	1.0	T	T	T	T
DZ158	63									0.8	1.0	T	T	T	T
	80										1.0	T	T	T	T
	100												T	T	T

«Электро-Профи» - www.ep.ru

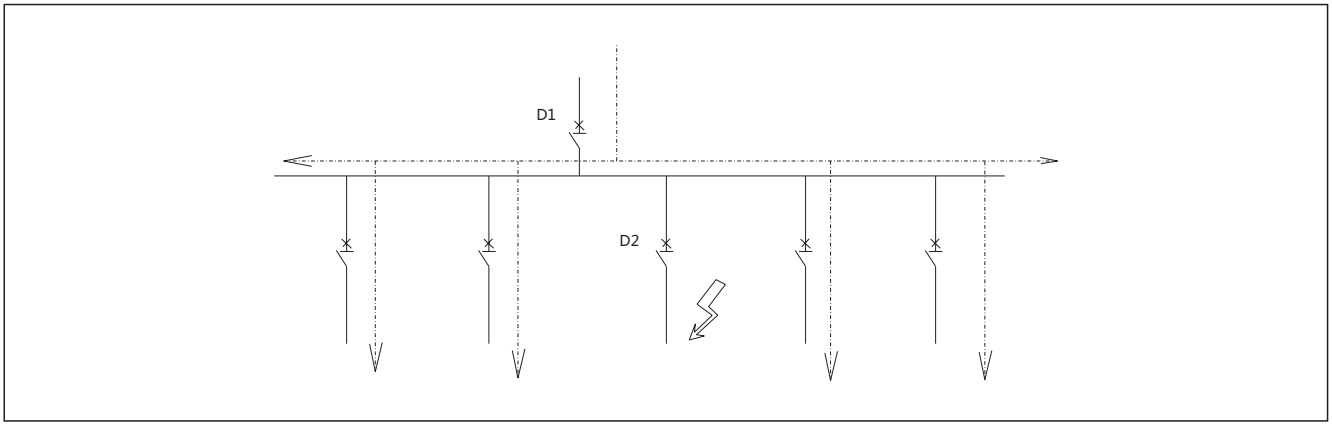

NM8-400 S/H/R				NM8-630 S/H/R					NM8-800 S/H			NM8-1250 S/H				
250	315	350	400	250	315	350	400	500	630	700	800	630	700	800	1000	1250
T	T	T	T	T	T	T	T	T	T	T	T	T	T	T	T	T

Upstream: NM8S-125~1250
Downstream: DZ267, DZ47, eB, UB, NBH8, NB1, DZ158

Upstream / Downstream In (A) / Ii (kA)		NM8S-125 S/H			NM8S-250 S/H				NM8S-400 S/H/R			
		40	100	125	100	160	200	250	250	315	350	400
DZ267 C Curves	≤10	0.5	0.8	1.0	T	T	T	T	T	T	T	T
	16	0.5	0.8	1.0	T	T	T	T	T	T	T	T
	20	0.5	0.8	1.0	T	T	T	T	T	T	T	T
	25		0.8	1.0	T	T	T	T	T	T	T	T
	32		0.8	1.0	T	T	T	T	T	T	T	T
DZ47, eB, UB C Curves	≤10	0.5	0.8	1.0	T	T	T	T	T	T	T	T
	16	0.5	0.8	1.0	T	T	T	T	T	T	T	T
	20	0.5	0.8	1.0	T	T	T	T	T	T	T	T
	25		0.8	1.0	T	T	T	T	T	T	T	T
	32		0.8	1.0	T	T	T	T	T	T	T	T
	40		0.8	1.0	T	T	T	T	T	T	T	T
	50		0.8	1.0	T	T	T	T	T	T	T	T
	60			1.0	T	T	T	T	T	T	T	T
NBH8 B C Curves	≤10	0.5	0.8	1.0	T	T	T	T	T	T	T	T
	16	0.5	0.8	1.0	T	T	T	T	T	T	T	T
	20	0.5	0.8	1.0	T	T	T	T	T	T	T	T
	25		0.8	1.0	T	T	T	T	T	T	T	T
	32		0.8	1.0	T	T	T	T	T	T	T	T
	40		0.8	1.0	T	T	T	T	T	T	T	T
NB1 B C D Curves	≤10	0.5	0.8	1.0	T	T	T	T	T	T	T	T
	16	0.5	0.8	1.0	T	T	T	T	T	T	T	T
	20	0.5	0.8	1.0	T	T	T	T	T	T	T	T
	25		0.8	1.0	T	T	T	T	T	T	T	T
	32		0.8	1.0	T	T	T	T	T	T	T	T
	40		0.8	1.0	T	T	T	T	T	T	T	T
	50		0.8	1.0	T	T	T	T	T	T	T	T
	63		0.8	1.0	T	T	T	T	T	T	T	T
	63		0.8	1.0	T	T	T	T	T	T	T	T
	80			1.0	T	T	T	T	T	T	T	T
	100					T	T	T	T	T	T	T
	63		0.8	1.0	T	T	T	T	T	T	T	T
DZ158	80			1.0	T	T	T	T	T	T	T	T
	100					T	T	T	T	T	T	T
	125					T	T	T	T	T	T	T

«Электро-Профи» - www.ep.ru

B

NM8S-630 S/H/R						NM8S-800 S/H			NM8S-1250 S/H					NM8S-1600 S/H		
250	315	350	400	500	630	630	700	800	630	700	800	1000	1250	1000	1250	1600
T	T	T	T	T	T	T	T	T	T	T	T	T	T	T	T	T
T	T	T	T	T	T	T	T	T	T	T	T	T	T	T	T	T
T	T	T	T	T	T	T	T	T	T	T	T	T	T	T	T	T
T	T	T	T	T	T	T	T	T	T	T	T	T	T	T	T	T
T	T	T	T	T	T	T	T	T	T	T	T	T	T	T	T	T
T	T	T	T	T	T	T	T	T	T	T	T	T	T	T	T	T
T	T	T	T	T	T	T	T	T	T	T	T	T	T	T	T	T
T	T	T	T	T	T	T	T	T	T	T	T	T	T	T	T	T
T	T	T	T	T	T	T	T	T	T	T	T	T	T	T	T	T
T	T	T	T	T	T	T	T	T	T	T	T	T	T	T	T	T
T	T	T	T	T	T	T	T	T	T	T	T	T	T	T	T	T
T	T	T	T	T	T	T	T	T	T	T	T	T	T	T	T	T
T	T	T	T	T	T	T	T	T	T	T	T	T	T	T	T	T
T	T	T	T	T	T	T	T	T	T	T	T	T	T	T	T	T
T	T	T	T	T	T	T	T	T	T	T	T	T	T	T	T	T
T	T	T	T	T	T	T	T	T	T	T	T	T	T	T	T	T
T	T	T	T	T	T	T	T	T	T	T	T	T	T	T	T	T
T	T	T	T	T	T	T	T	T	T	T	T	T	T	T	T	T
T	T	T	T	T	T	T	T	T	T	T	T	T	T	T	T	T
T	T	T	T	T	T	T	T	T	T	T	T	T	T	T	T	T
T	T	T	T	T	T	T	T	T	T	T	T	T	T	T	T	T
T	T	T	T	T	T	T	T	T	T	T	T	T	T	T	T	T
T	T	T	T	T	T	T	T	T	T	T	T	T	T	T	T	T
T	T	T	T	T	T	T	T	T	T	T	T	T	T	T	T	T
T	T	T	T	T	T	T	T	T	T	T	T	T	T	T	T	T
T	T	T	T	T	T	T	T	T	T	T	T	T	T	T	T	T
T	T	T	T	T	T	T	T	T	T	T	T	T	T	T	T	T
T	T	T	T	T	T	T	T	T	T	T	T	T	T	T	T	T
T	T	T	T	T	T	T	T	T	T	T	T	T	T	T	T	T

«Электро-Профи» - www.ep.ru

Upstream: NM8-125~1250
Downstream: NM8(S)-125~1250

Upstream / Downstream In (A) / Ii (kA)		NM8-125 S/H/R										NM8-250 S/H/R			
		16	20	25	32	40	50	63	80	100	125	100	160	200	250
NM8-125 S	16				0.4	0.5	0.5	0.5	0.63	0.8	1.0	2.0	T	T	T
	20					0.5	0.5	0.5	0.63	0.8	1.0	2.0	T	T	T
	25						0.5	0.5	0.63	0.8	1.0	2.0	T	T	T
	32							0.5	0.63	0.8	1.0	2.0	T	T	T
	40								0.63	0.8	1.0	2.0	T	T	T
	50									0.8	1.0	2.0	T	T	T
	63										1.0	2.0	T	T	T
	80												1.25	T	T
	100												1.25	T	T
	125														T
NM8-125 H/R	16				0.4	0.5	0.5	0.5	0.63	0.8	1.0	2.0	T	T	T
	20					0.5	0.5	0.5	0.63	0.8	1.0	2.0	T	T	T
	25						0.5	0.5	0.63	0.8	1.0	2.0	T	T	T
	32							0.5	0.63	0.8	1.0	2.0	T	T	T
	40								0.63	0.8	1.0	2.0	3.6	3.6	3.6
	50									0.8	1.0	2.0	3.6	3.6	3.6
	63										1.0	2.0	3.6	3.6	3.6
	80												3.6	3.6	3.6
	100												3.6	3.6	3.6
	125														3.6
NM8S-125 S/H	40								0.63	0.8	1.0	1.25	T	T	T
	100												1.25	T	T
	125														2.5
NM8-250 S	100														3
	160														
	200														
	250														
NM8-250 H/R	100														3
	160														
	200														
	250														
NM8S-250 S/H	100												1.6	2	2.5
	160														2.5
	200														
	250														
NM8-400 S/H/R	250														
	315														
	350														
	400														
NM8S-400 S/H/R	250														
	315														
	350														
	400														
NM8-630 S/H/R	250														
	315														
	350														
	400														
	500														

«Электро-Профи» - www.ep.ru

B

NM8-400 S/H/R				NM8-630 S/H/R					NM8-800 S/H			NM8-1250 S/H				
250	315	350	400	250	315	350	400	500	630	700	800	630	700	800	1000	1250
T	T	T	T	T	T	T	T	T	T	T	T	T	T	T	T	T
T	T	T	T	T	T	T	T	T	T	T	T	T	T	T	T	T
T	T	T	T	T	T	T	T	T	T	T	T	T	T	T	T	T
T	T	T	T	T	T	T	T	T	T	T	T	T	T	T	T	T
T	T	T	T	T	T	T	T	T	T	T	T	T	T	T	T	T
T	T	T	T	T	T	T	T	T	T	T	T	T	T	T	T	T
T	T	T	T	T	T	T	T	T	T	T	T	T	T	T	T	T
T	T	T	T	T	T	T	T	T	T	T	T	T	T	T	T	T
T	T	T	T	T	T	T	T	T	T	T	T	T	T	T	T	T
T	T	T	T	T	T	T	T	T	T	T	T	T	T	T	T	T
T	T	T	T	T	T	T	T	T	50	50	50	50	50	50	T	T
T	T	T	T	T	T	T	T	T	50	50	50	50	50	50	T	T
T	T	T	T	T	T	T	T	T	50	50	50	50	50	50	T	T
T	T	T	T	T	T	T	T	T	50	50	50	50	50	50	T	T
T	T	T	T	T	T	T	T	T	50	50	50	50	50	50	T	T
T	T	T	T	T	T	T	T	T	50	50	50	50	50	50	T	T
T	T	T	T	T	T	T	T	T	50	50	50	50	50	50	T	T
T	T	T	T	T	T	T	T	T	50	50	50	50	50	50	T	T
T	T	T	T	T	T	T	T	T	50	50	50	50	50	50	T	T
T	T	T	T	T	T	T	T	T	50	50	50	50	50	50	T	T
T	T	T	T	T	T	T	T	T	T	T	T	T	T	T	T	T
T	T	T	T	T	T	T	T	T	T	T	T	T	T	T	T	T
T	T	T	T	T	T	T	T	T	T	T	T	T	T	T	T	T
5	T	T	T	3	T	T	T	T	T	T	T	T	T	T	T	T
	5	T	T		5	T	T	T	T	T	T	T	T	T	T	T
		5	T			5	T	T	T	T	T	T	T	T	T	T
			5				5	T	T	T	T	T	T	T	T	T
5		T	T	3	T	T	T	T	40	40	40	40	40	40	T	T
		T	T		5	T	T	T	40	40	40	40	40	40	T	T
		5	T			5	T	T	40	40	40	40	40	40	T	T
			5				5	T	40	40	40	40	40	40	T	T
5		5	5	T	T	T	T	T	T	T	T	T	T	T	T	T
5		5	5	T	T	T	T	T	T	T	T	T	T	T	T	T
		5	5				T	T	T	T	T	T	T	T	T	T
			5					T	T	T	T	T	T	T	T	T
							8	8	30	30	30	30	30	30	T	T
								8	30	30	30	30	30	30	T	T
									30	30	30	30	30	30	T	T
									30	30	30	30	30	30	T	T
							8	8	12	12	12	12	12	12	15	15
								8	12	12	12	12	12	12	15	15
									12	12	12	12	12	12	15	15
									12	12	12	12	12	12	15	15
							8	8	30	30	30	30	30	30	T	T
								8	30	30	30	30	30	30	T	T
									30	30	30	30	30	30	T	T
									30	30	30	30	30	30	T	T
										30	30	30	30	30	T	T

«Электро-Профи» - www.ep.ru

Upstream / Downstream In (A) / Ii (kA)		NM8-125 S/H/R										NM8-250 S/H/R			
		16	20	25	32	40	50	63	80	100	125	100	160	200	250
NM8S-630 S/H/R	250														
	315														
	350														
	400														
	500														
	630														
NM8-800 S/H	630														
	700														
	800														
NM8S-800 S/H	630														
	700														
	800														
NM8-1250 S/H	630														
	700														
	800														
	1000														
	1250														
NM8S-1250 S/H	630														
	700														
	800														
	1000														
	1250														
NM8S-1600 S/H	1000														
	1250														
	1600														

Upstream: NM8S-125~1250
Downstream: NM8(S)-125~1250

Upstream / Downstream In (A) / Ii (kA)		NM8S-125 S/H			NM8S-250 S/H				NM8S-400 S/H/R			
		40	100	125	100	160	200	250	250	315	350	400
NM8-125 S	16		1.2	1.2	1.2	T	T	T	T	T	T	T
	20		1.2	1.2	1.2	T	T	T	T	T	T	T
	25		1.2	1.2	1.2	T	T	T	T	T	T	T
	32		1.2	1.2	1.2	T	T	T	T	T	T	T
	40		1.2	1.2	1.2	T	T	T	T	T	T	T
	50		1.2	1.2	1.2	T	T	T	T	T	T	T
	63			1.2	1.2	T	T	T	T	T	T	T
	80					T	T	T	T	T	T	T
	100						T	T	T	T	T	T
	125							T	T	T	T	T
NM8-125 H/R	16		1.2	1.2	1.2	T	T	T	T	T	T	T
	20		1.2	1.2	1.2	T	T	T	T	T	T	T
	25		1.2	1.2	1.2	T	T	T	T	T	T	T
	32		1.2	1.2	1.2	T	T	T	T	T	T	T
	40		1.2	1.2	1.2	T	T	T	T	T	T	T
	50		1.2	1.2	1.2	2	36	36	T	T	T	T
	63			1.2	1.2	2	36	36	T	T	T	T
	80					2	36	36	T	T	T	T
	100							36	T	T	T	T
	125							36	T	T	T	T
NM8S-125 S/H	40		1.2	1.2	2	2	T	T	T	T	T	T
	100					2	T	T	T	T	T	T
	125							T	T	T	T	T

«Электро-Профи» - www.ep.ru

B

NM8-400 S/H/R				NM8-630 S/H/R					NM8-800 S/H			NM8-1250 S/H				
250	315	350	400	250	315	350	400	500	630	700	800	630	700	800	1000	1250
							8	8	12	12	12	12	12	12	15	15
								8	12	12	12	12	12	12	15	15
									12	12	12	12	12	12	15	15
									12	12	12	12	12	12	15	15
										12	12	12	12	12	15	15
											12			12	15	15
															15	15
															15	15
															15	15

NM8S-630 S/H/R						NM8S-800 S/H			NM8S-1250,1600 S/H				
250	315	350	400	500	630	630	700	800	630	700	800	1000	1250
T	T	T	T	T	T	T	T	T	T	T	T	T	T
T	T	T	T	T	T	T	T	T	T	T	T	T	T
T	T	T	T	T	T	T	T	T	T	T	T	T	T
T	T	T	T	T	T	T	T	T	T	T	T	T	T
T	T	T	T	T	T	T	T	T	T	T	T	T	T
T	T	T	T	T	T	T	T	T	T	T	T	T	T
T	T	T	T	T	T	T	T	T	T	T	T	T	T
T	T	T	T	T	T	T	T	T	T	T	T	T	T
T	T	T	T	T	T	T	T	T	T	T	T	T	T
T	T	T	T	T	T	T	T	T	T	T	T	T	T
T	T	T	T	T	T	50	50	50	50	50	50	T	T
T	T	T	T	T	T	50	50	50	50	50	50	T	T
T	T	T	T	T	T	50	50	50	50	50	50	T	T
T	T	T	T	T	T	50	50	50	50	50	50	T	T
T	T	T	T	T	T	50	50	50	50	50	50	T	T
T	T	T	T	T	T	50	50	50	50	50	50	T	T
T	T	T	T	T	T	50	50	50	50	50	50	T	T
T	T	T	T	T	T	50	50	50	50	50	50	T	T
T	T	T	T	T	T	50	50	50	50	50	50	T	T
T	T	T	T	T	T	T	T	T	T	T	T	T	T
T	T	T	T	T	T	T	T	T	T	T	T	T	T
T	T	T	T	T	T	T	T	T	T	T	T	T	T

«Электро-Профи» - www.ep.ru

Upstream / Downstream In (A) / Ii (kA)		NM8S-125 S/H			NM8S-250 S/H				NM8S-400 S/H/R			
		40	100	125	100	160	200	250	250	315	350	400
	40		1.2	1.2	2	2	T	T	T	T	T	T
	100					2	T	T	T	T	T	T
	125							T	T	T	T	T
NM8-250 S	100							3	5	5	5	5
	160										5	5
	200											
	250											
NM8-250 H/R	100							3	5	5	5	5
	160										5	5
	200											
	250											
NM8S-250 S/H	100							5	5	5	5	5
	160							5	5	5	5	5
	200										5	5
	250											5
NM8-400 S/H/R	250											
	315											
	350											
	400											
NM8S-400 S/H/R	250											
	315											
	350											
	400											
NM8-630 S/H/R	250											
	315											
	350											
	400											
	500											
NM8S-630 S/H/R	250											
	315											
	350											
	400											
	500											
	630											
NM8-800 S/H	630											
	700											
	800											
NM8S-800 S/H	630											
	700											
	800											
NM8-1250 S/H	630											
	700											
	800											
	1000											
	1250											
NM8S-1250 S/H	630											
	700											
	800											
	1000											
	1250											
NM8S-1600 S/H	1000											
	1250											
	1600											

Note:
a. The area with T indication clarifies total protection discrimination between upstream and downstream circuit breakers;
b. The area with numbers clarifies partial protection discrimination between upstream and downstream circuit breakers;
c. For partial protection discrimination, the Max. fault current values to ensure time discrimination performance are given in the table; when fault current exceeds this value, upstream and downstream circuit breakers may operate at the same time.

«Электро-Профи» - www.ep.ru

B

NM8S-630 S/H/R						NM8S-800 S/H			NM8S-1250 S/H					NM8S-1600 S/H		
250	315	350	400	500	630	630	700	800	630	700	800	1000	1250	1000	1250	1600
T	T	T	T	T	T	T	T	T	T	T	T	T	T	T	T	T
T	T	T	T	T	T	T	T	T	T	T	T	T	T	T	T	T
T	T	T	T	T	T	T	T	T	T	T	T	T	T	T	T	T
T	T	T	T	T	T	T	T	T	T	T	T	T	T	T	T	T
			T	T	T	T	T	T	T	T	T	T	T	T	T	T
				T	T	T	T	T	T	T	T	T	T	T	T	T
					T	T	T	T	T	T	T	T	T	T	T	T
T	T	T	T	T	T	40	40	40	40	40	40	T	T	T	T	T
			T	T	T	40	40	40	40	40	40	T	T	T	T	T
				T	T	40	40	40	40	40	40	T	T	T	T	T
					T	40	40	40	40	40	40	T	T	T	T	T
T	T	T	T	T	T	T	T	T	T	T	T	T	T	T	T	T
T	T	T	T	T	T	T	T	T	T	T	T	T	T	T	T	T
			T	T	T	T	T	T	T	T	T	T	T	T	T	T
				T	T	T	T	T	T	T	T	T	T	T	T	T
			8	8	8	30	30	30	30	30	30	T	T	T	T	T
				8	8	30	30	30	30	30	30	T	T	T	T	T
					8	30	30	30	30	30	30	T	T	T	T	T
					8	30	30	30	30	30	30	T	T	T	T	T
			8	8	8	12	12	12	12	12	12	15	15	15	15	15
				8	8	12	12	12	12	12	12	15	15	15	15	15
					8	12	12	12	12	12	12	15	15	15	15	15
					8	12	12	12	12	12	12	15	15	15	15	15
				8	8	30	30	30	30	30	30	T	T	T	T	T
				8	8	30	30	30	30	30	30	T	T	T	T	T
					8	30	30	30	30	30	30	T	T	T	T	T
					8	30	30	30	30	30	30	T	T	T	T	T
							30	30		30	30	T	T	T	T	T
				8	8	12	12	12	12	12	12	15	15	15	15	15
				8	8	12	12	12	12	12	12	15	15	15	15	15
					8	12	12	12	12	12	12	15	15	15	15	15
					8	12	12	12	12	12	12	15	15	15	15	15
							12	12	12	12	12	15	15	15	15	15
								12			12	15	15	15	15	15
												20	20	20	20	20
												15	15	15	15	15
												20	20	20	20	20
												15	15	15	15	15

«Электро-Профи» - www.ep.ru

11.7 Selection table of components for motor control or protection
400V, 50kA, type2, MCCB normal load start-up

Motor parameters		Circuit breaker parameters		Contactor parameters		Thermal relay parameters	
Rated power (kW)	Rated current (A)	Model	Setting of magnetic protection (A)	Model	Rated heating current (A)	Model	Rated current (A)
5.5	10.9	NM8-125S/16M	192	NC1-12	20	NR2-25	9~13
7.5	14.4	NM8-125S/20M	240	NC1-18	32	NR2-25	12~18
11	20.9	NM8-125S/25M	300	NC1-25	40	NR2-25	17~25
15	28	NM8-125S/32M	384	NC1-32	50	NR2-36	23~32
18.5	34.1	NM8-125S/40M	480	NC1-40	60	NR2-36	28~36
22	39.4	NM8-125S/50M	600	NC1-50	80	NR2-93	30~40
30	53.4	NM8-125S/63M	756	NC1-65	80	NR2-93	48~65
37	67.9	NM8-125S/80M	960	NC1-80	110	NR2-93	55~70
45	80.5	NM8-125S/100M	1200	NC1-95	110	NR2-93	80~93
55	98.5	NM8-125S/125M	1500	NC2-115	200	NR2-200	80~125
75	133	NM8-250S/160M	1920	NC2-150	200	NR2-200	100~160
90	158.7	NM8-250S/200M	2400	NC2-185	275	NR2-200	100~160
110	192	NM8-250S/250M	3000	NC2-225	275	NR2-200	125~200
132	229	NM8-400S/315M	3780	NC2-265	315	NR2-630	160~250
160	275	NM8-400S/350M	4200	NC2-330	380	NR2-630	200~315
200	343	NM8-400S/400M	4800	NC2-400	450	NR2-630	250~400
250	445	NM8-630S/500M	6000	NC2-500	630	NR2-630	315~500
290	520	NM8S-630S/630M	7560	NC2-630	800	NR2-630	400~630
315	560	NM8S-630S/630M	7560	NC2-630	800	NR2-630	400~630

Note:
1. NM8 and NM8S breakers can replace each other with the same capacity in the table above .
2. NRE8 electronic relays and NR2 thermal relays can replace each other with the same capacity in the table above.

400V, 50kA, type2, MCCB heavy-load start-up

Motor parameters		Circuit breaker parameters		Contactor parameters		Thermal relay parameters	
Rated power (kW)	Rated current (A)	Model	Setting of magnetic protection (A)	Model	Rated heating current (A)	Model	Rated current (A)
5.5	10.9	NM8-125S/16M	192	NC1-18	32	NR2-25	9~13
7.5	14.4	NM8-125S/20M	240	NC1-25	40	NR2-25	12~18
11	20.9	NM8-125S/25M	300	NC1-32	50	NR2-25	17~25
15	28	NM8-125S/32M	384	NC1-40	60	NR2-36	23~32
18.5	34.1	NM8-125S/40M	480	NC1-50	80	NR2-36	28~36
22	39.4	NM8-125S/50M	600	NC1-65	80	NR2-93	30~40
30	53.4	NM8-125S/63M	756	NC1-80	110	NR2-93	48~65
37	67.9	NM8-125S/80M	960	NC1-95	110	NR2-93	55~70
45	80.5	NM8-125S/100M	1200	NC2-115	200	NR2-93	80~93
55	98.5	NM8-125S/125M	1500	NC2-150	200	NR2-200	80~125
75	133	NM8-250S/160M	1920	NC2-185	275	NR2-200	100~160
90	158.7	NM8-250S/200M	2400	NC2-225	275	NR2-200	100~160
110	192	NM8-250S/250M	3000	NC2-265	315	NR2-200	125~200
132	229	NM8-400S/315M	3780	NC2-330	380	NR2-630	160~250
160	275	NM8-400S/350M	4200	NC2-400	450	NR2-630	200~315
200	343	NM8-400S/400M	4800	NC2-500	630	NR2-630	250~400
250	445	NM8-630S/500M	6000	NC2-630	800	NR2-630	315~500
290	520	NM8S-630S/630M	7560	NC2-630	800	NR2-630	400~630

Note:
1. NM8 and NM8S breakers can replace each other with the same capacity in the table above .
2. NRE8 electronic relays and NR2 thermal relays can replace each other with the same capacity in the table above.

«Электро-Профи» - www.ep.ru

400V, 50kA, type2, MCCB star-delta start-up

Motor parameters		Circuit breaker parameters		Contactor parameters			Thermal relay parameters	
Rated power (kW)	Rated current (A)	Model	Setting of magnetic protection (A)	Feedback contactor	Delta contactor	Star contactor	Model	Rated current (A)
5.5	10.9	NM8-125S/16M	192	NC1-09	NC1-09	NC1-09	NR2-11.5	5.5~8
7.5	14.4	NM8-125S/20M	240	NC1-12	NC1-12	NC1-09	NR2-11.5	7~10
11	20.9	NM8-125S/25M	300	NC1-18	NC1-18	NC1-09	NR2-25	9~13
15	28	NM8-125S/32M	384	NC1-25	NC1-25	NC1-12	NR2-25	12~18
18.5	34.1	NM8-125S/40M	480	NC1-25	NC1-25	NC1-18	NR2-25	17~25
22	39.4	NM8-125S/50M	600	NC1-32	NC1-32	NC1-18	NR2-36	23~32
30	53.4	NM8-125S/63M	756	NC1-40	NC1-40	NC1-25	NR2-36	28~36
37	67.9	NM8-125S/80M	960	NC1-50	NC1-50	NC1-32	NR2-93	30~40
45	80.5	NM8-125S/100M	1200	NC1-65	NC1-65	NC1-32	NR2-93	37~50
55	98.5	NM8-125S/125M	1500	NC1-80	NC1-80	NC1-40	NR2-93	48~65
75	133	NM8-250S/160M	1920	NC1-95	NC1-95	NC1-50	NR2-93	63~80
90	158.7	NM8-250S/200M	2400	NC2-115	NC2-115	NC2-65	NR2-93	80~93
110	192	NM8-250S/250M	3000	NC2-150	NC2-150	NC2-80	NR2-200	80~125
132	229	NM8-400S/315M	3780	NC2-150	NC2-150	NC2-95	NR2-200	80~125
160	275	NM8-400S/350M	4200	NC2-185	NC2-185	NC2-115	NR2-200	100~160
200	343	NM8-400S/400M	4800	NC2-225	NC2-225	NC2-150	NR2-200	125~200
250	445	NM8-630S/500M	6000	NC2-330	NC2-330	NC2-185	NR2-630	200~315
290	520	NM8S-630S/630M	7560	NC2-400	NC2-400	NC2-185	NR2-630	200~315
315	560	NM8S-630S/630M	7560	NC2-400	NC2-400	NC2-225	NR2-630	250~400

Note:

1. NM8 and NM8S breakers can replace each other with the same capacity in the table above.
2. NRE8 electronic relays and NR2 thermal relays can replace each other with the same capacity in the table above.
3. Breaker is at the power supply side
4. In the delta connection circuit of thermal relay, the setting value is 0.58Ie;
5. The max. start-up time is 20s;
6. When Star type connection is changed into delta connection, the following connection modes of motor are recommended: L1, U1 to V2; L2, V1 to W2; L3, W1 to U2 to lower the impulse current;
7. The interval of star type connection changing into delta connection is 0.1s.

«Электро-Профи» - www.ep.ru

12. NM8 series accessories description form

Name of accessory	Code	Frame	Pole	Remark
Auxiliary contact 	AX-8/M8	NM8(S)-125,250,400,630 NM8(S)-800,1250	2P/3P/4P	
Alarm contact 	AL-8/M8	NM8(S)-125,250,400,630	2P/3P/4P	
Alarm contact 	AL-8/M8-1250	NM8(S)-800,1250	3P/4P	
Shunt release 	SM6:AC220V	NM8-125	2P/3P/4P	
	SQ6:AC380V			
	SH6:AC110V			
	SB1:DC24V			
	SB4:DC110V			
	SM5:AC220V	NM8S-125 NM8(S)-250,400,630	2P/3P/4P	
	SQ5:AC380V			
	SH5:AC110V			
	SB0:DC24V			
	SB5:DC110V			
	SM7:AC220V	NM8(S)-800,1250	3P/4P	
	SQ7:AC380V			
	SH7:AC110V			
	SB3:DC24V			
	SB7:DC110V			
	SB2:DC220V			
Under voltage release 	UM6:AC220V	NM8-125	2P/3P/4P	
	UQ6:AC380V			
	UM5:AC220V	NM8S-125 NM8(S)-250,400,630	2P/3P/4P	
	UQ5:AC380V			
	UB0:DC24V			
	UB5:DC110V			
	UM7:AC220V	NM8(S)-800,1250	3P/4P	
	UQ7:AC380V			
	UB3:DC24V			
Motor driven operating mechanism 	MO10:AC/DC110V	NM8-125	3P/4P	
	MO12:AC230/DC220			
	MO13:AC380			
	MO22:AC230/DC220	NM8S-125 NM8(S)-250		
	MO23:AC380			
	MO30:AC/DC110V	NM8(S)-400,630		
	MO32:AC230/DC220			
	MO33:AC380			
	MO40:AC/DC110V	NM8(S)-800,1250		
	MO41:AC230/DC220			
	MO42:AC380			
Plug-in base 	PL13	NM8-125	3P	
	PL14		4P	
	PL23	NM8S-125 NM8(S)-250	3P	
	PL24		4P	
	PL33	NM8(S)-400,630	3P	
	PL34		4P	
Economical extended rotary manual operating handle 	RH11	NM8-125	3P	
	RH14		4P	
	RH21	NM8S-125 NM8(S)-250	3P	
	RH24		4P	
	RH31	NM8(S)-400,630	3P/4P	
	RH41	NM8(S)-800,1250	3P/4P	
Normal direct rotary manual operating handle 	RH12	NM8-125	3P/4P	
	RH22	NM8-250	3P/4P	
	RH25	NM8S-125/250	3P/4P	
	RH32	NM8-400,630	3P/4P	
	RH35	NM8S-400,630	3P/4P	

«Электро-Профи» - www.ep.ru

Continued form 1

Name of accessory	Code	Frame	Pole	Remark
Normal extended rotary manual operating handle 	RH13	NM8-125	3P/4P	
	RH23	NM8-250	3P/4P	
	RH26	NM8S-125/250	3P/4P	
	RH33	NM8-400,630	3P/4P	
	RH36	NM8S-400,630	3P/4P	
Locking system 	PD1	NM8-125	3P/4P	
	PD2	NM8S-125,NM8(S)-250	3P/4P	
	PD3	NM8(S)-400,630	3P/4P	
	PD4	NM8(S)-800,1250	3P/4P	
	COMA-2/AC230V	NM8(S)-125 NM8(S)-250 NM8(S)-400,630 NM8(S)-800,1250		
	COMA-2/AC400V			
	COMA-2/DC24V			
Mechanical Interlock 	MI13	NM8-125	3P	
	MI14		4P	
	MI23	NM8S-125 NM8(S)-250	3P	
	MI24		4P	
	MI33	NM8(S)-400,630	3P	
	MI34		4P	
DIN rail adaptor 	DIN13	NM8-125	3P	
	DIN14		4P	
	DIN23	NM8S-125 NM8(S)-250	3P	
	DIN24		4P	
Rear connection plate 	BM12	NM8-125	2P	
	BM13		3P	
	BM14		4P	
	BM22	NM8S-125 NM8(S)-250	2P	
	BM23		3P	
	BM24		4P	
	BM33	NM8(S)-400,630	3P	
	BM34		4P	
Short terminal cover 	ST13	NM8-125	3P	
	ST14		4P	
	ST23	NM8S-125 NM8(S)-250	3P	
	ST24		4P	
	ST33	NM8(S)-400,630	3P	
	ST34		4P	
	ST43	NM8(S)-800,1250	3P	
	ST44		4P	
Extended terminal cover 	LT13	NM8-125	3P	
	LT14		4P	
	LT23	NM8S-125 NM8(S)-250	3P	
	LT24		4P	
	LT33	NM8(S)-400,630	3P	
	LT34		4P	
	LT43	NM8(S)-800,1250	3P	
	LT44		4P	
Front connection plate 	FM12	NM8-125	2P	
	FM13		3P	
	FM14		4P	
	FM22	NM8S-125 NM8(S)-250	2P	
	FM23		3P	
	FM24		4P	
	FM33	NM8(S)-400,630	3P	
	FM34		4P	
	FM43	NM8(S)-800,1250	3P	
	FM44		4P	

«Электро-Профи» - www.ep.ru

Continued form 1

Name of accessory		Code	Frame	Pole	Remark
Cage clamp terminal		CT12	NM8-125	2P	
		CT13		3P	
		CT14		4P	
		CT22	NM8S-125 NM8(S)-250	2P	
		CT23		3P	
		CT24		4P	
		CT33	NM8(S)-400,630	3P	
		CT34		4P	
Exterior clamp terminal		ET12 C1	NM8-125	2P	1×95
		ET13 C1		3P	1×95
		ET14 C1		4P	1×95
		ET22 C1	NM8S-125 NM8(S)-250	2P	1×240
		ET23 C1		3P	1×240
		ET24 C1		4P	1×240
		ET22 C2		2P	2×120
		ET23 C2		3P	2×120
		ET24 C2		4P	2×120
		ET22 C6		2P	6×35
		ET23 C6		3P	6×35
		ET24 C6		4P	6×35
		ET33 C2	NM8(S)-400,630	3P	2×240
		ET34 C2		4P	2×240
		ET33 C4		3P	4×95
		ET34 C4		4P	4×95
		ET43 C3	NM8(S)-800,1250	3P	3×240
		ET44 C3		4P	3×240
		ET43 C4		3P	4×240
		ET44 C4		4P	4×240

13. Model definition and description for NM8 series product

NM8S - 250 H / 160 / 4C / M

Product code	Frame current	Breaking capacity code	Rated current	Poles	Usage code
NM8: Thermal magnetic MCCB NM8S: Electronic MCCB	125 250 400 630 800 1250 1600	S H R	16, 20, 25, 32, 40, 50, 63, 80, 100, 125, 160, 180, 200, 225, 250, 315, 350, 400, 500, 630, 700, 800, 1000, 1250 1600	2:2 poles 3:3 poles 4:4 poles 4A: there is no over current release installed at pole N and N pole will always connect, which will not operate with the other three poles. 4B: there is no over current release installed at pole N and N pole will operate with the other three poles. 4C: there is over current release installed at pole N and N pole will operate with the other three poles. 4D: there is over current release installed at pole N and N pole will always connect.	M: motor protection No code: distribution protection

«Электро-Профи» - www.ep.ru

14. Model definition and description for NM8 accesorries

BM23 / RH12 / UM5 / AX-8/M8

Connection Accessories	Control mechanism Accessories		Internal Accessories	
FM12,FM13,FM14: Front connection plate (NM8-125) FM22,FM23,FM24: Front connection plate (NM8S-125 NM8(S)-250) FM33,FM34: Front connection plate (NM8(S)-400,630) FM43,FM44: Front connection plate (NM8(S)-800,1250) BM12,BM13,BM14: Rear connection plate (NM8-125) BM22,BM23,BM24: Rear connection plate (NM8S-125 NM8(S)-250) BM33,BM34: Rear connection plate (NM8(S)-400,630) PL13,PL14: Plug-in base (NM8-125) PL23,PL24: Plug-in base (NM8S-125 NM8(S)-250) PL33,PL34: Plug-in base (NM8(S)-400,630) DIN13,DIN14: DIN rail adaptor (NM8-125) DIN23,DIN24: DIN rail adaptor (NM8S-125 NM8(S)-250) CT12, CT13, CT14: Cage clamp terminal (NM8-125) CT22, CT23, CT24: Cage clamp terminal (NM8S-125 NM8(S)-250) CT33, CT34: Cage clamp terminal (NM8(S)-400,630) LT13,LT14: Extended terminal cover (NM8-125) LT23,LT24: Extended terminal cover (NM8S-125 NM8(S)-250) LT33,LT34: Extended terminal cover (NM8(S)-400,630) LT43,LT44: Extended terminal cover (NM8(S)-800,1250) ST13,ST14: Short terminal cover (NM8-125) ST23,ST24: Short terminal cover (NM8S-125 NM8(S)-250) ST33,ST34: Short terminal cover (NM8(S)-400,630) ST43,ST44: Short terminal cover (NM8(S)-800,1250)	RH11,RH14: Economical extended rotary manual operating handle (NM8-125) RH21,RH24: Economical extended rotary manual operating handle (NM8S-125 NM8(S)-250) RH31: Economical extended rotary manual operating handle (NM8(S)-400,630) RH41: Economical extended rotary manual operating handle (NM8(S)-800,1250) RH13: Normal extended rotary manual operating handle(NM8-125) RH23, RH26: Normal extended rotary manual operating handle (NM8-250,NM8S-125,250) RH33, RH36: Normal extended rotary manual operating handle (NM8-400,630,NM8S-400,630) RH12: Normal direct rotary manual operating handle(NM8-125) RH22,RH25: Normal direct rotary manual operating handle (NM8-250,NM8S-125,250) RH32, RH35: Normal direct rotary manual operating handle (NM8-400,630,NM8S-400,630) MO10, MO12, MO13: Motor driven operating mechanism(NM8-125) MO22, MO23: Motor driven operating mechanism(NM8S-125 NM8(S)-250) MO30, MO32, MO33: Motor driven operating mechanism(NM8(S)-400,630) MO40, MO41, MO42: Motor driven operating mechanism(NM8(S)-800,1250) PD1: Locking system(NM8-125) PD2: Locking system (NM8S-125 NM8(S)-250) PD3: Locking system (NM8(S)-400,630) PD4: Locking system (NM8(S)-800,1250) Communication model (NM8S-125,250,400,630,800,1250)	Shunt release SM6:AC220V SH6:AC110V SQ6:AC380V SB1:DC24V SB4:DC110V (NM8-125) SM5:AC220V SH5:AC110V SQ5:AC380V SB0:DC24V SB5:DC110V (NM8S-125, NM8(S)-250, 400,630) SM7:AC220V SH7:AC110V SQ7:AC380V SB3:DC24V SB7:DC110V SB2:DC220V (NM8(S)-800, 1250)	Under voltage release UM6:AC220V UQ6:AC380V (NM8-100) UM5:AC220V UQ5:AC380V UB0:DC24V UB5:DC110V (NM8S-125, NM8(S)-250,400,630) UM7:AC220V UQ7:AC380V UB3:DC24V (NM8(S)-800,1250)	Auxiliary contact (NM8(S)-125, NM8(S)-250,400,630, NM8(S)-800,1250) Alarm contact AL-8/M8 (NM8(S)-125, NM8(S)-250,400,630) AL-8/M8-1250 (NM8(S)-800,1250)

«Электро-Профи» - www.ep.ru

Note

«Электро-Профи» - www.ep.ru



NM1
Moulded Case Circuit Breaker

1. General

1.1 Certificates: KEMA, UKrSEPRO, EAC, RCC, EK;

1.2 Electric ratings: AC 690V,50/60HZ, 10~1250A;

1.3 Mounting mode: Vertical and horizontal;

1.4 Standard: IEC/EN60947-2.

2. Type designation

N M 1 - □ □ □ / □ □ □ □

- Type of N-pole for 4-P breaker*
- Application: Blank: for power distribution; 2: for motor protection
- Release type and accessory code (please refer to table on page 94)
- Number of poles
- Operation mode: Blank: direct operation with handle; P: motor-driven operation; Z: Operation with rotary handle
- Code of Breaking capacity : C-basic type; S-standard type; H-higher type; R-current limiting type
- Frame size rated current
- Design sequence number
- MCCB code
- Company code

Note *: There is types of N-pole for 4P breaker
B: Without current release components, N-Pole makes with the other three poles(N-pole first makes then breaks);

3. Classification

According to breaking capacity of breaker:

Standard type (C,S) Higher type (H)

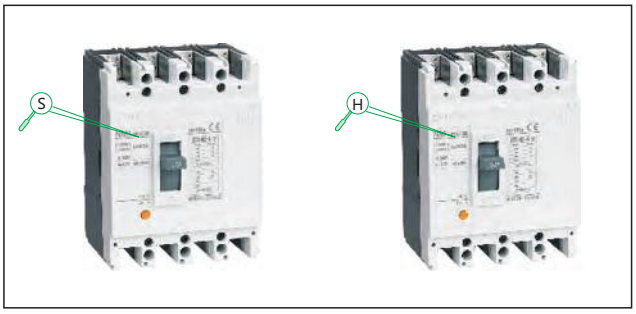

Current-limiting type (R)



«Электро-Профи» - www.ep.ru

According to wiring mode:

Front connection



According to operation mode:

Direct operation with handle



Operation with rotary handle



Motor-driven operation



According to number of poles:

2P



3P



4P



4. Operating conditions

4.1 Temperature: -5℃~+40℃; the average value within 24h shall not exceed +35℃.(please refer to coefficients on P79 for temperature compensation correction); for the circuit breaker with thermo-magnetic release, +40℃ is set to be the standard temperature for ratings. For temperature not between -5℃~+40℃, please contact us for temperature compensation correction.

4.2 Altitude: not exceed 2000m (Please contact with us for reduction coefficient if altitude at the mounted site beyond 2000m).

4.3 Pollution grade: Grade 3

4.4 IP grade: IP30

4.5 Air conditions
At mounting site, relative humidity not exceed 50% at the max temperature of +40℃, higher relative humidity is allowable under lower temperature. For example, RH could be 90% at +20℃, special measures should be taken to occurrence of dews.

«Электро-Профи» - www.ep.ru

5. Technical data

Frame size current		63			125						250										400				630				800					1250
Electric characteristics as per IEC 60947-2, EN 60947-2 Rated current (A) In 40℃ Rated insulation voltage (V) Ui		10, 16, 20, 25, 30, 32, 40, 50, 63			25, 30, 32, 40, 50, 63, 80, 100, 125						100, 125, 140, 150, 160, 175, 180, 200, 225, 250										250, 300, 315, 350, 400				400, 450, 500, 630				630, 700, 800					800, 1000, 1250
		500			800						800										800				800				800					800
Rated impulse withstand voltage(kV) Uimp		6			8						8										8				8				8					8
Rated operational voltage (V) Ue AC 50/60Hz		415			690						690										690				690				690					690
Arcing distance (mm)		≤50			≤50						≤50										≤100				≤100				≤100					≤100
Breaking capacity code		S	H		C	S	H			R	C		S		H			R			S	H		R	S		H		R	S		H			H
																																		
Number of poles		3	3	4	3	3	2	3	4	3	2	3	4	1	3	4	2	3	4	3	3	4	3	3	3	4	3	3	3	4	3	4	3	3
Rated ultimate short-circuit breaking capacity Icu (kA, rms)	AC 220/230/240V	20	42	42	25	42	65	65	65	85	25	25	25	20	42	42	65	65	65	85	50	50	85	100	50	50	85	100	65	65	85	85	100	85
	AC 380/400/415V	15	35	35	20	25	50	50	50	65	20	20	20	10	25	25	50	50	50	65	35	35	50	70	35	35	50	70	50	50	60	60	70	65
Test sequence:O-t-CO	AC 660/690V	–	–	–	3	3	–	8	8	10	–	5	5	–	5	5	–	8	8	10	10	10	12	15	12	12	15	15	12	12	20	20	20	20
Rated service short-circuit breaking capacity Ics (%Icu) Test sequence:O-t-CO-t-CO		50%			50%																50%				50%				50%					50%
Isolation function		■			■						■										■				■				■					■
Utilization class		A			A						A										A				A				A					A
Front connection		■			■						■										■				■				■					■
Rear connection		■			■						■										■				■				■					
Plug in type		■			■						■										■				■				■					
Shunt release		■			■						■										■				■				■					■
Under-voltage release		■			■						■										■				■				■					■
Auxiliary contact		■			■						■										■				■				■					■
Alarm contact		■			■						■										■				■				■					

Note:
The symbols O-t-Co, O-t-Co-t-Co are used for defining the sequence of operations.
O: breaking operation; t: the time interval between two successive short-circuit operations;
CO: a making operation followed, after the appropriate opening time, by a breaking operation.

«Электро-Профи» - www.ep.ru

6. Release

Inverse time breaking action property of the over current releasing of the breaker (for power distribution) at the status that all poles are electrified simultaneously

No.	Test current	I/In	Conventional time	Initial status
1	Conventional non-trip current	1.05	2h(In > 63A), 1h(In≤63A)	Cold status
2	Conventional trip current	1.30	2h(In > 63A), 1h(In≤63A)	Right after test no. 1

Inverse time-delay breaking operation property of the over current tripping of the breaker(for motor protection) at the status that all poles are electrified simultaneously(conforms to IEC60947-3)

Serial No.	Setting current	Conventional time	Start-up status	Remark
1	1.0In	> 2h	Cold status	
2	1.2In	≤2h	Right after test number 1	
3	1.5In	≤2min	Hot state	10A≤In≤25A
				25A≤In≤63A
		≤4min	Hot state	63A≤In≤125A
		≤8min	Hot state	125A≤In≤800A
4	7.2In	0.5s≤Tp≤5s	Cold state	10A≤In≤25A
		2s≤Tp≤10s	Cold state	25A≤In≤63A
		4s≤Tp≤10s	Cold state	63A≤In≤125A
		6s≤Tp≤20s	Cold state	125A≤In≤800A

7. Product overview

NM1 Moulded Case Circuit Breaker

1. MCCB (fixed type)
2. Under-voltage release
3. Shunt release
4. Alarm contact
5. Auxiliary contact
6. Motor-driven operation mechanism
7. Extended manual operation handle
8. Mechanical interlock
9. Cage clamp terminal
10. Terminal cover
11. Front connection plate

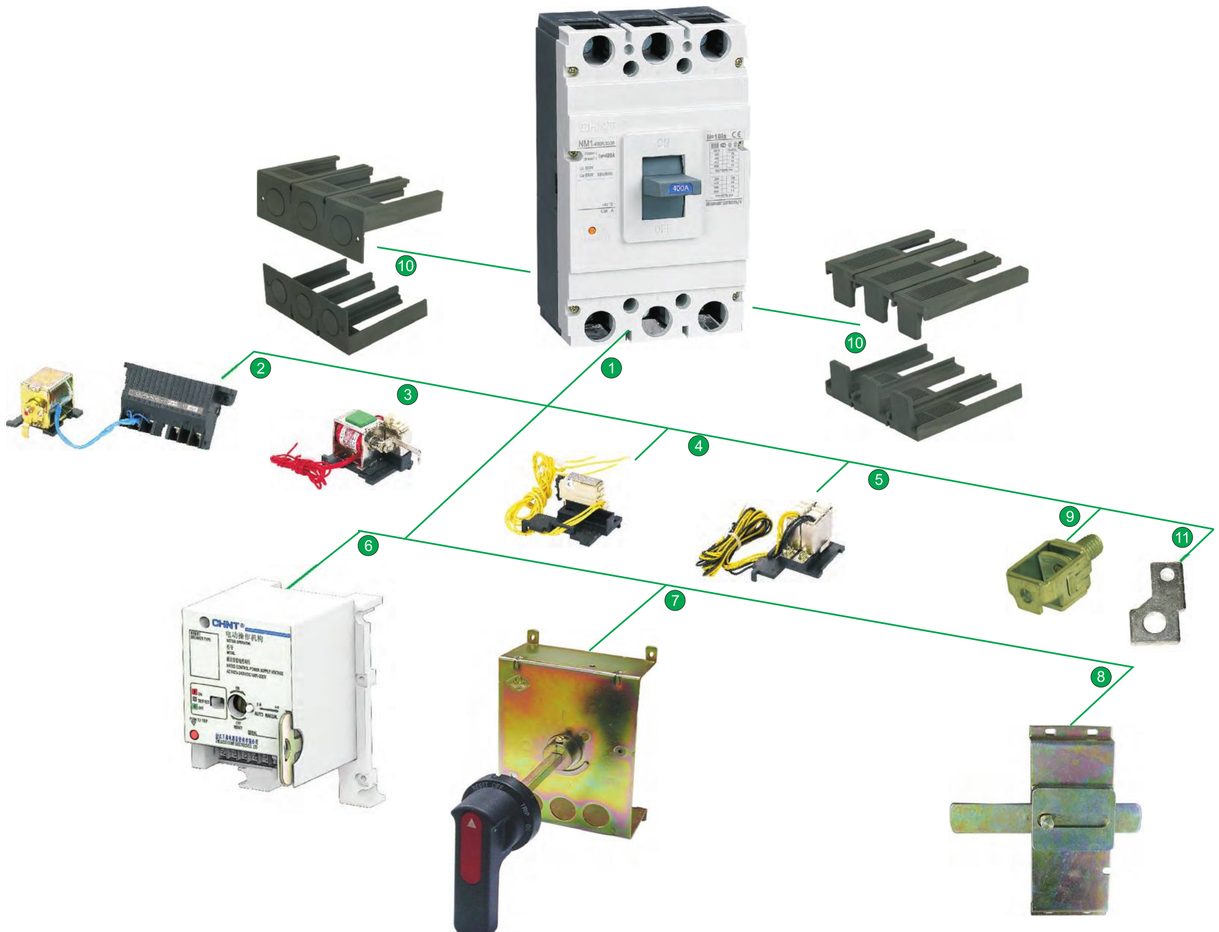

«Электро-Профи» - www.ep.ru

B

8. Curves (for power distribution, calibrated at 40℃)

8.1 The characteristic curve of anti-time limit and the correcting curve of temperature see fig.

Fig.1 NM1-63(10~32), NM1-125(25~32)
Characteristic Curve

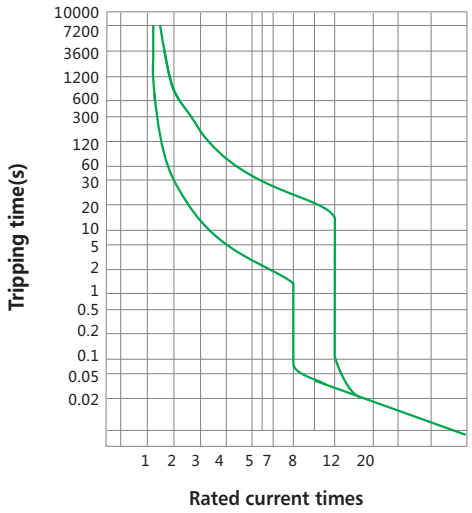

Fig.2 NM1-63(10~32), NM1-125(25~32)
Adjustment curve of temperature

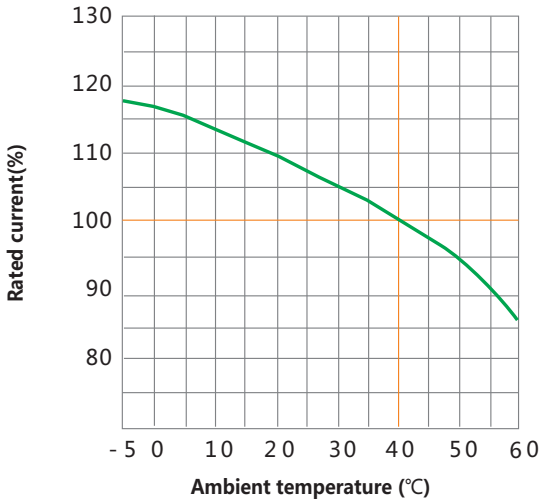

Fig.3 NM1-63(40~63), NM1-125(40~125)
Characteristic Curve

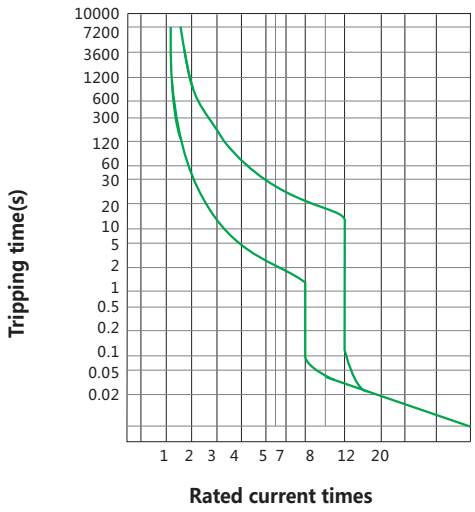

Fig.4 NM1-63(40~63), NM1-125(40~125)
Adjustment curve of temperature

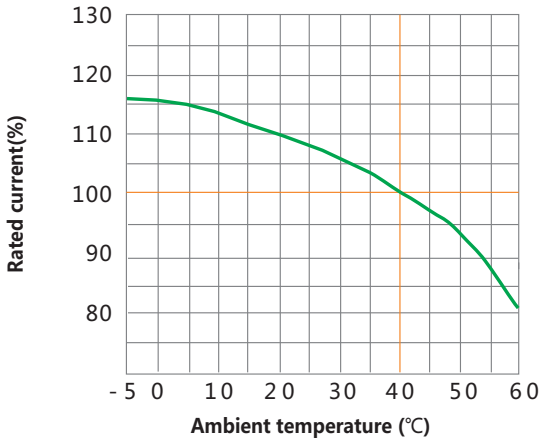

«Электро-Профи» - www.ep.ru

Fig.5 NM1-250 Characteristic Curve

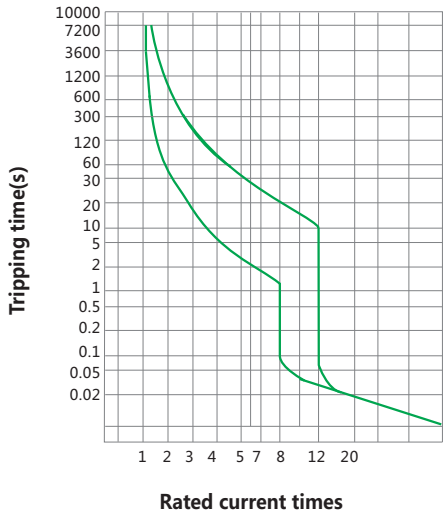

Fig.6 NM1-250 Adjustment curve of temperature

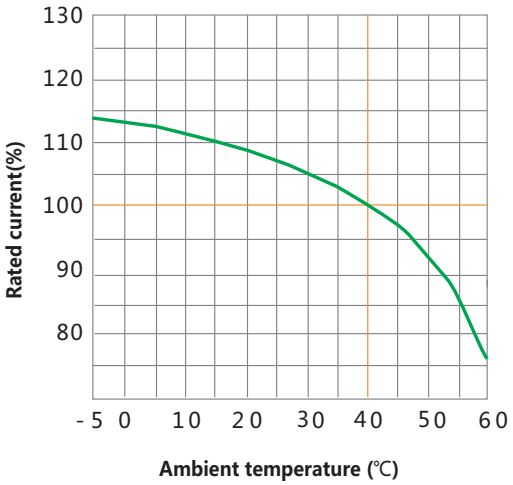

Fig.7 NM1-400 Characteristic Curve

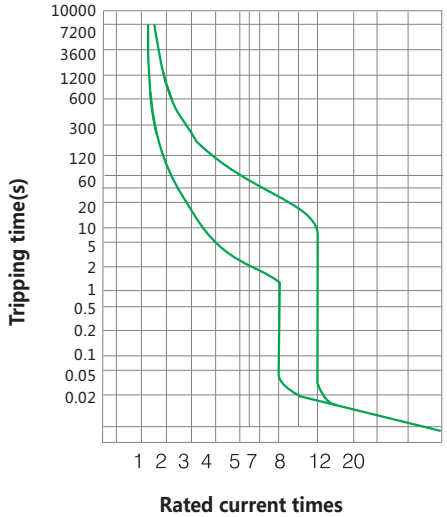

Fig.8 NM1-400 Adjustment curve of temperature

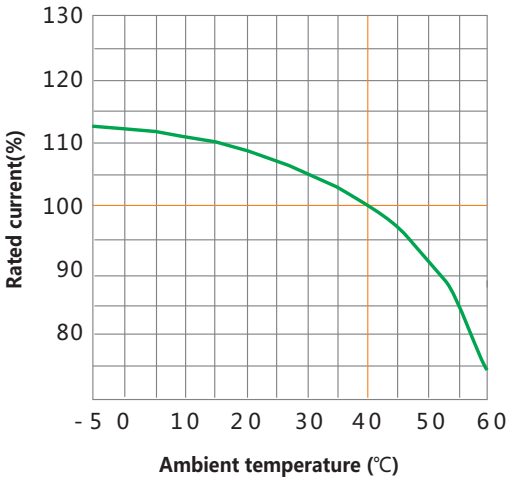

«Электро-Профи» - www.ep.ru

B

Fig.9 NM1-630, NM1-800 Characteristic Curve

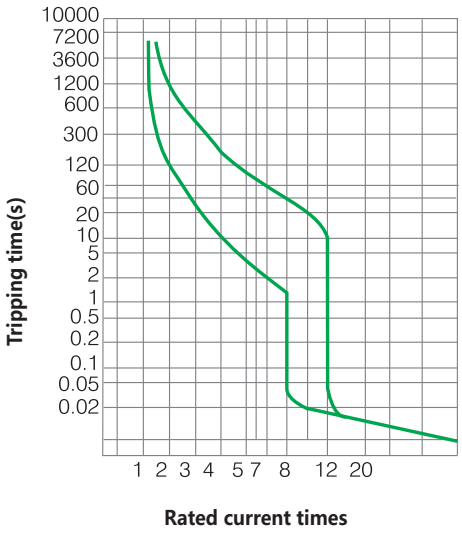

Fig.10 NM1-630, NM1-800 Adjustment curve of temperature

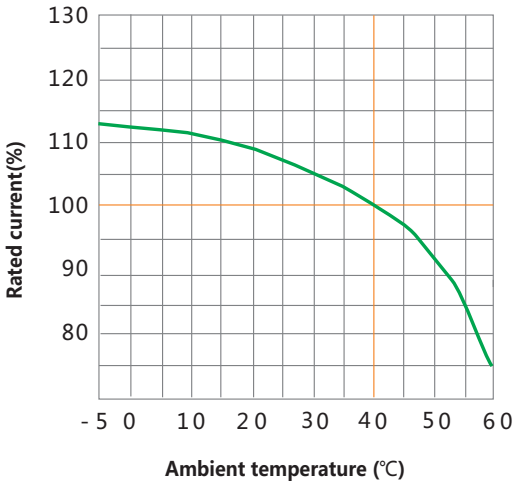

Fig.11 NM1-1250 Characteristic Curve

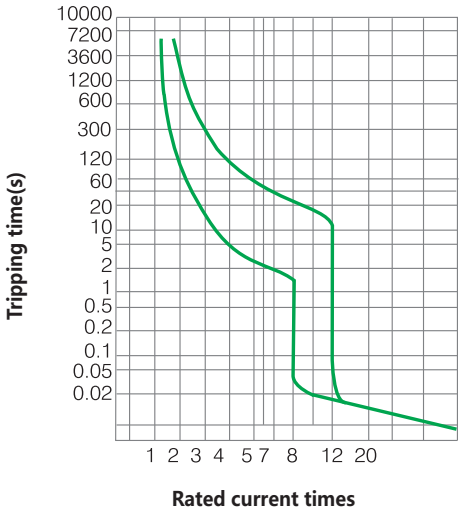

Fig.12 NM1-1250 Adjustment curve of temperature

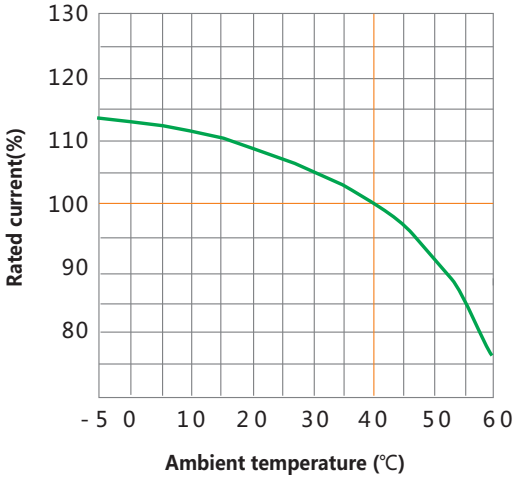

«Электро-Профи» - www.ep.ru

8.2 Temperature compensation correction

NM1 series temperature compensation coefficient table (calibration at 40℃, for the calibration at other temperature standards please contact with us)

Type	Current range	Compensation coefficient													
		-5℃	0℃	5℃	10℃	15℃	20℃	25℃	30℃	35℃	40℃	45℃	50℃	55℃	60℃
NM1-63S, H	10~32A	1.18	1.17	1.16	1.14	1.12	1.09	1.07	1.05	1.03	1	0.97	0.95	0.92	0.87
NM1-63S, H	40~63A	1.16	1.16	1.15	1.14	1.12	1.10	1.08	1.06	1.03	1	0.97	0.94	0.87	0.82
NM1-125C, S, H, R	25~32A	1.18	1.17	1.16	1.14	1.12	1.09	1.07	1.05	1.03	1	0.97	0.95	0.92	0.87
NM1-125C, S, H, R	40~125A	1.16	1.16	1.15	1.14	1.12	1.10	1.08	1.06	1.03	1	0.97	0.94	0.87	0.82
NM1-250 S, H, R	100~250A	1.14	1.13	1.13	1.12	1.10	1.08	1.07	1.05	1.03	1	0.97	0.93	0.86	0.76
NM1-400S, H, R	225~400A	1.13	1.12	1.12	1.11	1.10	1.08	1.06	1.05	1.03	1	0.97	0.93	0.85	0.75
NM1-630S, H, R	400~630A	1.13	1.12	1.12	1.11	1.10	1.08	1.07	1.05	1.03	1	0.97	0.93	0.85	0.75
NM1-800S,H, R	630~800A	1.13	1.12	1.12	1.11	1.10	1.08	1.07	1.05	1.03	1	0.97	0.93	0.85	0.75
NM1-1250H	700~1250A	1.14	1.13	1.12	1.11	1.10	1.09	1.07	1.05	1.03	1	0.97	0.92	0.85	0.76

9. Wiring

Front connection(Fixed connection)

Extended connection terminals (for products 10~1250A, extended terminals are available)

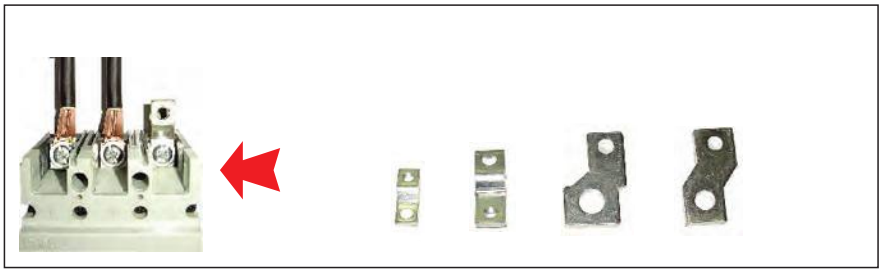

Connection screws

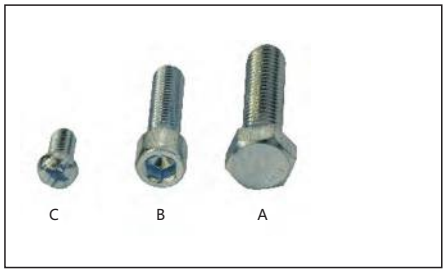

«Электро-Профи» - www.ep.ru

B

Frame level	Current (A)	Breaking capacity code	Front connection screw		
			Hexagonal head screw (A)	Hexagonal socket screw (B)	Cross screw (C)
63	10	S		■	
		H		■	
	16	S		■	
		H		■	
	20	S		■	
		H		■	
	25	S		■	
		H		■	
	30	S		■	
		H		■	
	32	S		■	
		H		■	
	40	S		■	
		H		■	
	50	S		■	
		H		■	
	60	S		■	
		H		■	
	63	S		■	
		H		■	
125	25	C		■	■
		S		■	■
		H		■	■
		R		■	■
	30	C		■	■
		S		■	■
		H		■	■
		R		■	■
	32	C		■	■
		S		■	■
		H		■	■
		R		■	■
	40	C		■	■
		S		■	■
		H		■	■
		R		■	■
	50	C		■	■
		S		■	■
		H		■	■
		R		■	■
	60	C		■	■
		S		■	■
		H		■	■
		R		■	■
	63	C		■	■
		S		■	■
		H		■	■
		R		■	■
	75	C		■	■
		S		■	■
		H		■	■
		R		■	■

Frame level	Current (A)	Breaking capacity code	Front connection screw		
			Hexagonal head screw (A)	Hexagonal socket screw (B)	Cross screw (C)
125	80	C		■	■
		S		■	■
		H		■	■
		R		■	■
	100	C		■	■
		S		■	■
		H		■	■
		R		■	■
	125	C		■	■
		S		■	■
		H		■	■
		R		■	■
250	100	S		■	
		H		■	
		R		■	
	125	S		■	
		H		■	
		R		■	
	140	S		■	
		H		■	
		R		■	
	150	S		■	
		H		■	
		R		■	
	160	S		■	
		H		■	
		R		■	
	175	S		■	
		H		■	
		R		■	
	180	S		■	
		H		■	
		R		■	
	200	S		■	
		H		■	
		R		■	
	225	S		■	
		H		■	
		R		■	
	250	S		■	
		H		■	
		R		■	
400	225	S	■	■	
		H	■	■	
		R	■	■	
	250	S	■	■	
		H	■	■	
		R	■	■	
	300	S	■	■	
		H	■	■	
		R	■	■	

«Электро-Профи» - www.ep.ru

Frame level	Current (A)	Breaking capacity code	Front connection screw		
			Hexagonal head screw (A)	Hexagonal socket screw (B)	Cross screw (C)
400	315	S	■	■	
		H	■	■	
		R	■	■	
	350	S	■	■	
		H	■	■	
		R	■	■	
	400	S	■	■	
		H	■	■	
		R	■	■	
630	400	S		■	
		H		■	
		R		■	
	450	S		■	
		H		■	
		R		■	
	500	S		■	
		H		■	
		R		■	
	630	S		■	
		H		■	
		R		■	
800	630	H		■	
		R		■	
	700	H		■	
		R		■	
	800	H		■	
		R		■	

Cage clamp terminals (for products 16~400A, cage clamp terminals are available)

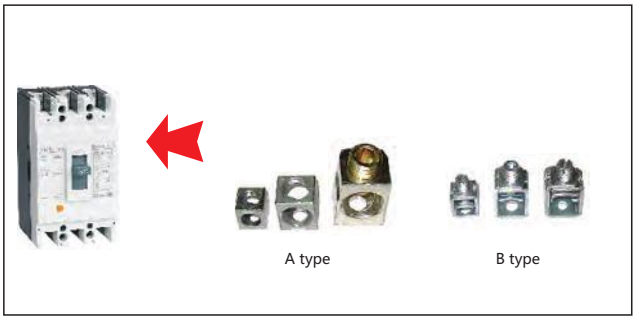

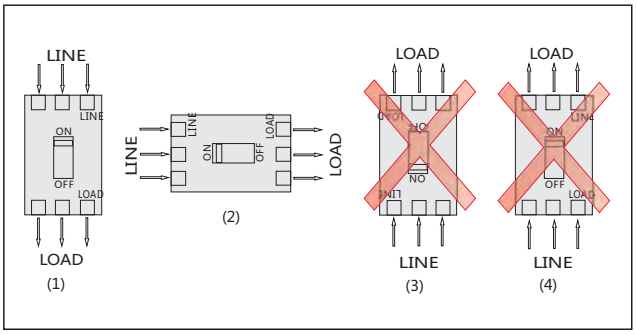

Modes of down-lead (1) and (2) illustrated in the figure are available for your wiring operation. For its breaking capacity may be affected, mode of down-lead (3) is not recommended, before reception of any authorized announcement from the manufacturer; the mode of down-lead (4) is prohibited for your wiring.

«Электро-Профи» - www.ep.ru

B

10. Overall and mounting dimensions

Fig.15a NM1-63, 125, 250 fixed connection

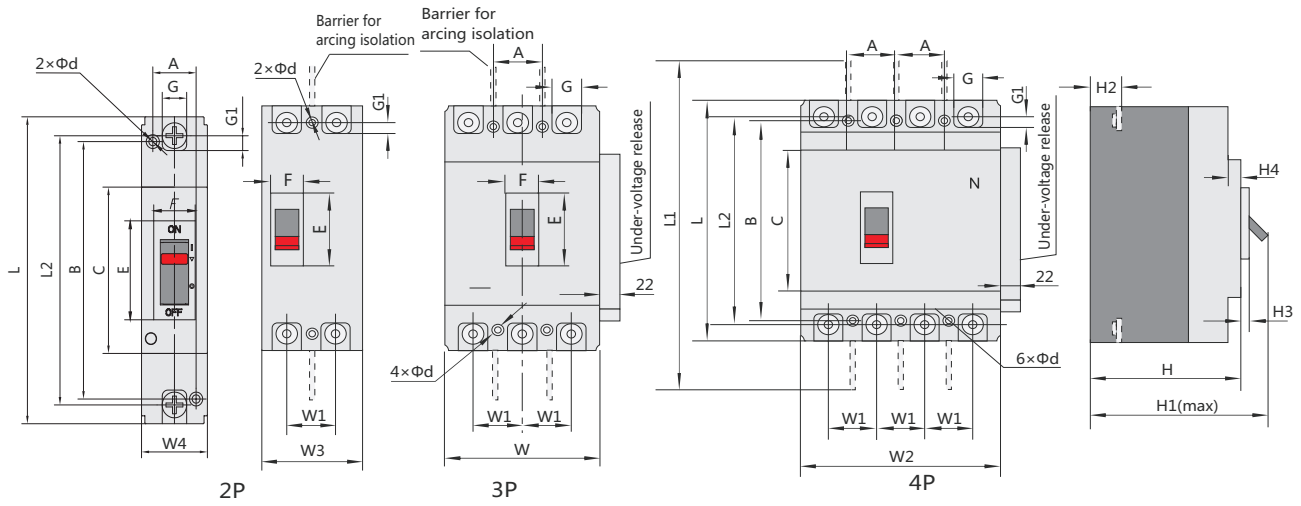

(mm)

Dimension		NM1-63S	NM1-63H	NM1-125C NM1-125S	NM1-125H NM1-125R	NM1-250S/1P	NM1-250S	NM1-250H NM1-250R
Overall dimensions	C	85	85	85	85	102	102	102
	E	48	48	51	51	51	51	51
	F	23	23	23	23	22	23	23
	G	14	14	17.5	17.5	23	23	23
	G1	6.5	6.5	7.5	7.5	11.5	11.5	11.5
	H	70	80	67	86	86	87	103.5
	H1	91	100	86	104	109	110	127
	H2	19	28	24	24	24	24	24
	H3	6	6	4	4	4.5	3.5	3.5
	H4	5	5	7	7	6	5.5	5.5
	L	135	135	155	155	165	165	165
	L1	235	235	255	255	-	360	360
	L2	117	117	136	136	144	144	144
	W	76	76	90	90		105	105
	W1	25	25	30	30	-	-	35
	W2	-	103	-	120	-	-	140
	W3	-	-	-	65	-	-	75
	W4	-	-	-	-	35	-	-
Mounting	A	25	25	30	30	28	35	35
	B	117	117	130.5	130.5	109	126	126
dimensions	Φd	4.5	4.5	4.5×6	4.5×6	3.5	5	5

«Электро-Профи» - www.ep.ru

Overall and mounting dimensions of NM1-400, 630, 800, 1250(Fixed type)

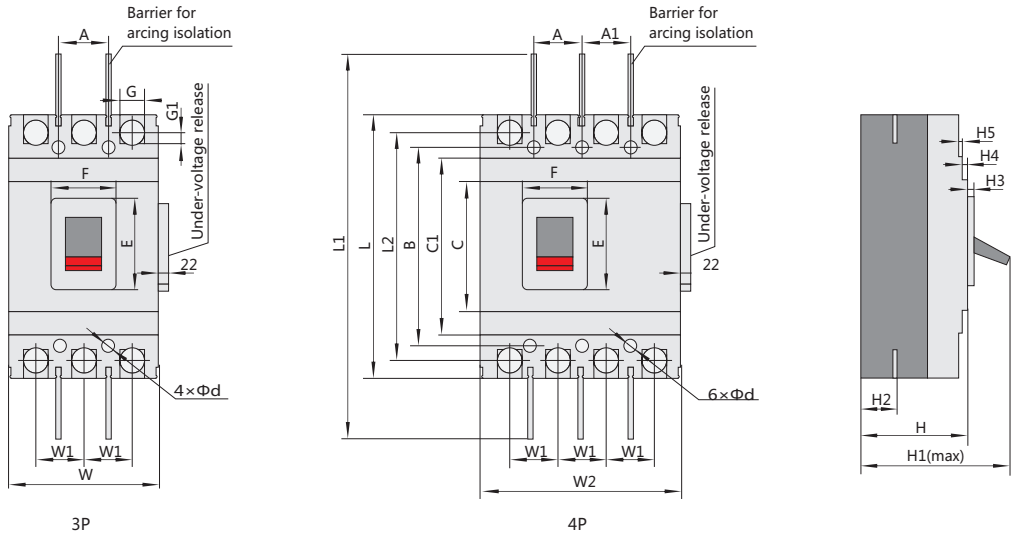

(mm)

Dimension		NM1-400S NM1-400H NM1-400R	NM1-630S NM1-630H NM1-630R	NM1-800H/R	NM1-1250H
Overall dimensions	C	128	136	136	265.5
	C1	174	184.5	204	345.5
	E	89	89	81	100
	F	66	66	66	78
	G	31	40.5	45	-
	G1	12	15.5	12	-
	H	107	112	116	141
	H1	162	164.5	168	202
	H2	38	42	42	1250:56 ; 700A~1000A:54
	H3	6	6.5	4.5	19
	H4	5	3.5	5	2
	H5	4.5	4.5	8	4.5
	L	257	270.5	280	406*
	L1	459	472	490	715
	L2	224	234	243	-
	W	150	182	210	210
	W1	48	58	70	70
	W2	198	240	280	-
Mounting dimensions	A	44	58	70	70
	A1	50	58	70	-
	B	194	200	243	375
	Φd	7	7	7	10

*Note: Lengh of NM1-1250H with the connection board, is 545mm

«Электро-Профи» - www.ep.ru

11. Accessories

Inner accessories

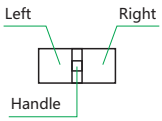

Auxiliary contact



Shunt release



Alarm contact



Under-voltage release



Accessory	Accessory code		Mounting and wiring mode		
	Magnetic only release	Compound release	NM1-125H,R NM1-250H,R	NM1-63S,H NM1-125C,S,H,R NM1-250S,H NM1-400S,H,R NM1-630S,H,R NM1-800H, R	NM1-1250H
			2P	3P 4P	3P
No accessory	200	300			
Alarm contact	208	308		●	
Shunt release	210	310	■	■	■
Auxiliary contact	220	320	○	○	○
Under-voltage release	230	330	▲	▲	▲
Shunt release, auxiliary contact	240	340		■ ○	○ ■
Shunt release, under-voltage release	250	350		■ ▲	
Two groups of auxiliary contacts	260	360		○ ○	○ ○
Auxiliary contact, under-voltage release	270	370		○ ▲	○ ▲
Shunt release, alarm contact	218	318		● ■	
Auxiliary alarm contact	228	328		● ○	
Under-voltage release, auxiliary alarm contact	238	338		● ▲	
Shunt release, auxiliary alarm contact	248	348		● ○ ■	
Two groups auxiliary contact of auxiliary alarm contact	268	368		● ○ ○	
Under-voltage release auxiliary alarm contact	278	378		● ○ ▲	

Note : ■Shunt release ▲Under-voltage release ○Auxiliary contact ●Alarm contact

«Электро-Профи» - www.ep.ru

11.1 Under-voltage release

a. Un=70~35% Us, reliable operation

b. Un= < 35% Us, prevent breaker from making

c. Un= > 85% Us, guarantee the breaker making

The rated voltage of the under-voltage release is 50Hz, 230V and 400V.

Code of under-voltage release

code	A2	A4
voltage	AC 230V	AC 400V
rated frequency	50Hz	50Hz

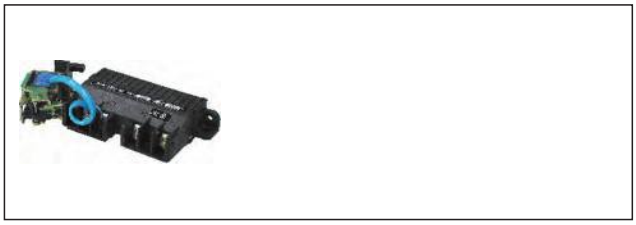

11.2 Shunt release

The rated control voltage of shunt release is 50Hz, 230V and 400V.

Un=70%~110% Us, reliable operation

Code of shunt release

code	A2	A4	D3
voltage	AC 230V	AC 400V	DC 24V
rated frequency	50Hz/ 60Hz	50Hz/ 60Hz	-

Note: when voltage is DC 24V, rated current should be up to 5A±10%

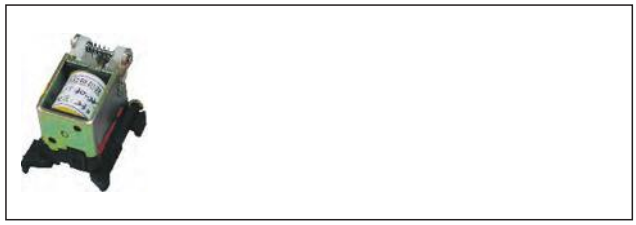

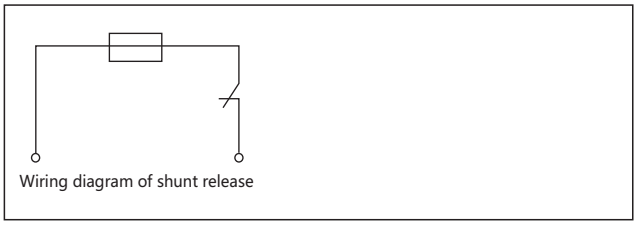

11.3 Auxiliary contact and alarm contact

Rated parameter of auxiliary contact

Frame size	Conventional heating current Ith (A)	Rated current Ie (A) at AC 400 V	Rated current Ie (A) at DC 230 V
Inm≤250A	3	0.26	0.14
Inm≥400A	6	3	0.2

«Электро-Профи» - www.ep.ru

B

a. Auxiliary contact

Circuit breaker is at "breaking" status	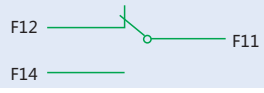
Circuit breaker is at "making" status	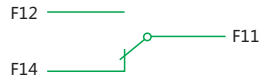

b. Alarm contact

When circuit breaker normally makes and breaks, alarm contact doesn't operate. After free release (or release due to failure) alarm contact operate; and after the circuit breaker operates again,alarm contact returns to the original status.

Circuit breaker is at "breaking" or "making" status	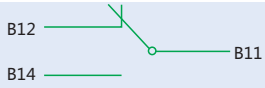
Circuit breaker is at free release (or alarming) status	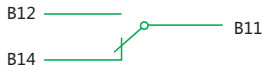

Wiring diagram of NM1 auxiliary contact

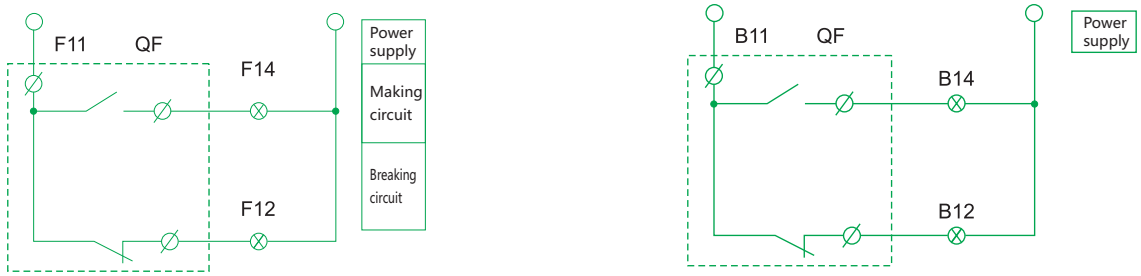

External accessories

11.4 Motor-driven operation mechanism

Items \ Model	NM1-63 NM1-125, NM1-250, NM1-400, NM1-630, NM1-800, NM1-1250
Structure form	Motor
Code of AC/DC voltage	A1/D1, A2/D2, A4

Note: A1 AC 110V, A2 AC 230V, A4 AC 400V, D1 DC 110V, D2 DC 230V

«Электро-Профи» - www.ep.ru

Making and breaking diagram of
motor-driven operation mechanism(AC/DC)

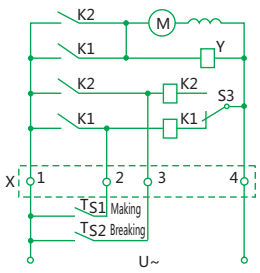

With self-locking relay
Specification AC 50Hz 230V or 400V

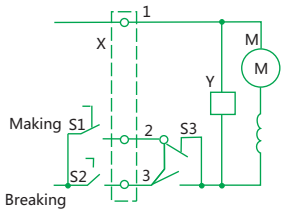

Without self-locking relay
Specification AC 50Hz 230V or 400V

Rotary manual operation mechanism

Making/breaking wiring diagram of manual operation mechanism

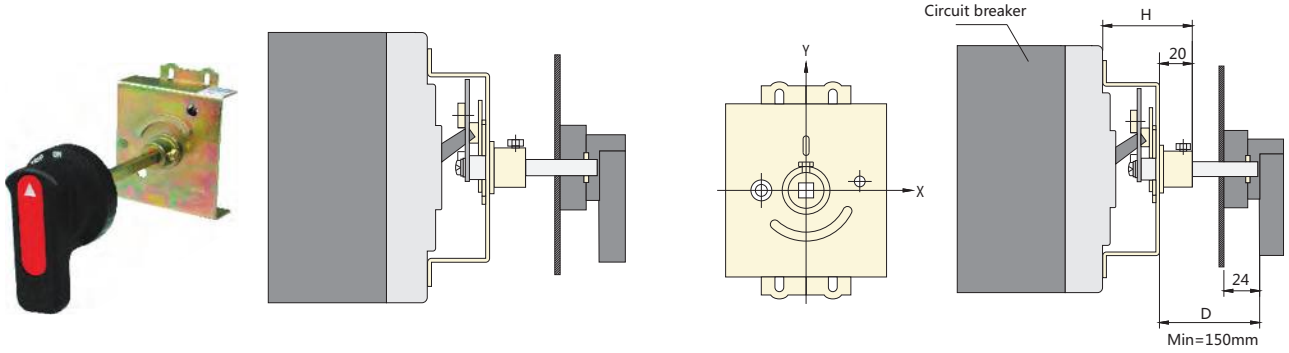

«Электро-Профи» - www.ep.ru

B

Mounting dimensions of manual operation mechanism

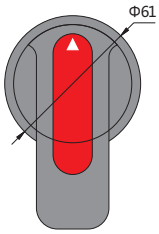

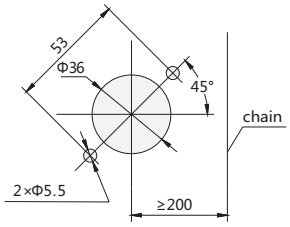

Boring diagram of handle mounting



(mm)

Model	NM1-63	NM1-125	NM1-250	NM1-400	NM1-630	NM1-800H NM1-800R	NM1-1250S NM1-1250H
Mounting size H	51	51	54	88	89	96	83
Y value of the handle related to the center of the breaker	0	0	0	0	0	0	0

«Электро-Профи» - www.ep.ru

Mounting and boring dimensions

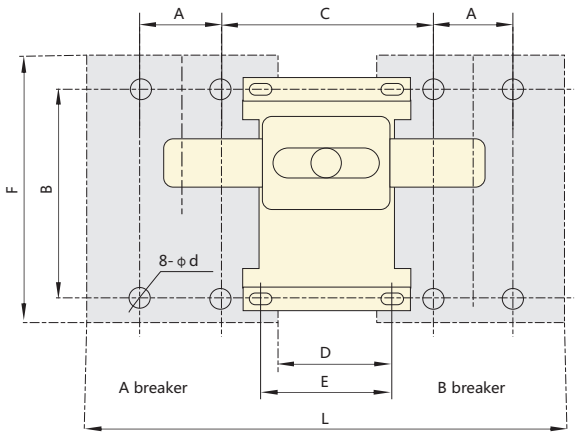



(mm)

Model	A	B	C	D	E	F	L	Φd
NM1-63	25	117	80	30	80	135	182	4.5
NM1-125	30	130.5	90	30	90	155	210	4.5×6*
NM1-250	35	126	100	30	100	165	240	5.5
NM1-400	44	194	136	30	40	257	330	7
NM1-630	58	200	172	48	62	270	412	7
NM1-800	70	243	167	28	40	280	448	7

Note:

1. * stands for length of boring.
2. Install the breaker on the frame first, then install the mechanical interlock on the breaker.

«Электро-Профи» - www.ep.ru

B

12. Complementary technical information

12.1 The customized products of NM1-250, of which the capacity can be enriched to 250A is available.
12.2 NM1-1250 products are equipped with connection plate when they are sold; if you need connection plate for products of other model, the connection plate should be ordered separately.
12.3 Only H type breaker is applicable to manufacture NM1 series switch disconnector.
12.4 Terminal covers of the whole series NM1 products are available, and the protection degree can be up to IP40 after the breaker is equipped with terminal cover.
.12.5 Safe distance between other electric apparatuses for mounting.



(mm)

Type / Distance(min)	NM1-63	NM1-125	NM1-250	NM1-400	NM1-630	NM1-800	NM1-1250
Line side	50	50	50	100	100	100	100
Load side	20	20	20	20	20	20	20
Right side	25	25	25	25	25	25	25
Left side	25	25	25	25	25	25	25

«Электро-Профи» - www.ep.ru

12.6 Tightening torque table

Wire size(copper)		Rated current (A)	Tightening torque(N·m)	
AWG/MCM	mm^2		Front connection plate	Boxing terminal
16-6	1.5-16	10≤In≤63	5	3
4-3	25-50	63<In≤125	10	8
1-250	50-120	100<In≤250	12	10
250-500	120-240	250<In≤400	22	16
300×2	150×2	400<In≤500	28	18
350×2	185×2	500<In≤630	28	20
500×2	240×2	630<In≤800	30	-
350×4	185×4	800<In≤1250	30	-

12.7 Technical Data of NM1 series

Frame current (A)	Model	Number of poles	Ui (V)	Icu/Ics(kA)		
				220V 230V 240V	380V 400V 415V	660V 690V
63	NM1-63S	3	500	20/10	15/7.5	-
	NM1-63H	3/4	500	42/21	35/17.5	-
125	NM1-125C	3	800	25/12.5	20/10	3/1.5
	NM1-125S	3	800	42/21	25/12.5	3/1.5
	NM1-125H	2	800	65/32.5	50/25	-
		3/4	800	65/32.5	50/25	8/4
	NM1-125R	3	800	85/42.5	65/32.5	10/5
250	NM1-250S	1	800	20/10	10/5	-
		3/4	800	42/21	25/12.5	5/2.5
	NM1-250H	2	800	65/32.5	50/25	-
		3/4	800	65/32.5	50/25	8/4
	NM1-250R	3	800	85/42.5	65/32.5	10/5
400	NM1-400S	3/4	800	50/25	35/17.5	10/5
	NM1-400H	3	800	85/42.5	50/25	12/6
	NM1-400R	3	800	100/50	70/35	15/7.5
630	NM1-630S	3/4	800	50/25	35/17.5	12/6
	NM1-630H	3	800	85/42.5	50/25	15/7.5
	NM1-630R	3	800	100/50	70/35	20/10
800	NM1-800H	3/4	800	85/42.5	60/30	20/10
	NM1-800R	3	800	100/50	70/35	20/10
1250	NM1-1250H	3	800	85/42.5	65/32.5	20/10

«Электро-Профи» - www.ep.ru

Frame current (A)	Model	Number of poles	Ui (V)	Icu/Ics(kA)		
				220V 230V 240V	380V 400V 415V	660V 690V
63	NM1-63S	3	500	20/40	15/30	-
	NM1-63H	3/4	500	42/88.2	35/73.5	-
125	NM1-125C	3	800	25/52.5	20/40	-
	NM1-125S	3	800	42/88.2	25/52.5	-
	NM1-125H	2	800	65/43	50/105	-
		3/4	800	65/43	50/105	-
	NM1-125R	3	800	85/187	65/143	-
250	NM1-250S	1	800	20/40	-	-
		2/ 3/4	800	42/88.2	25/52.5	-
	NM1-250H	2/ 3/4	800	65/136.5	50/105	-
	NM1-250R	3	800	85/187	65/143	-
400	NM1-400S	3/4	800	50/105	35/73.5	-
	NM1-400H	3	800	85/187	50/105	-
	NM1-400R	3	800	100/220	70/154	-
630	NM1-630S	3/4	800	50/105	35/73.5	-
	NM1-630H	3	800	85/187	50/105	-
	NM1-630R	3	800	100/220	70/154	-
800	NM1-800H	3/4	800	85/187	60/132	-
	NM1-800R	3	800	100/220	70/154	-
1250	NM1-1250H	3	800	85/187	65/143	

Note: Parameters in black are only for your reference.

«Электро-Профи» - www.ep.ru

12.8 Cascading

12.8.1 Cascading (220/230/240V)

Upstream: NM1-63~1250

Downstream: DZ47, eB, UB, DZ158, DZ267, NB1, NBH8, NM1-63~1250

Upstream → Breaking capacity (kA RMS)	NM1-63S 20	NM1-63H 42	NM1-125S 25	NM1-125H 50	NM1-125R 65	NM1-250S 25	NM1-250H 50
Downstream ↓	Breaking capacity (kA RMS)						
DZ267	20	40	20	35	50	20	25
DZ47, eB, UB	20	40	20	35	50	20	25
NBH8	20	40	20	35	50	20	25
NB1(Icn=6000A)	20	42	25	35	50	25	35
NB1(Icn=10000A)	20	42	25	40	50	25	35
DZ158			25	40	50	25	40
NM1-63S		42	25	50	65	25	50
NM1-63H					65		
NM1-125S				50	65		50
NM1-125H					65		
NM1-250S							50
NM1-250H							
NM1-400S							
NM1-400H							
NM1-630S							
NM1-630H							
NM1-800H							
NM1-1250H							

12.8.2 Cascading (380/400/415V)

Upstream: NM1-63~1250

Downstream: DZ47, eB, UB, DZ158, DZ267, NB1, NBH8, NM1-63~1250

Upstream → Breaking capacity (kA RMS)	NM1-63S 15	NM1-63H 35	NM1-125S 25	NM1-125H 50	NM1-125R 65	NM1-250S 25	NM1-250H 50
Downstream ↓	Breaking capacity (kA RMS)						
DZ47, eB, UB	10	15	10	15	15	10	15
NB1(Icn=6000A)	15	20	15	20	20	15	20
NB1(Icn=10000A)	15	20	20	25	25	20	25
DZ158			20	25	35	20	25
NM1-63S		35	25	50	65	25	50
NM1-63H					65		
NM1-125S				50	65		50
NM1-125H					65		
NM1-250S							50
NM1-250H							
NM1-400S							
NM1-400H							
NM1-630S							
NM1-630H							
NM1-800H							
NM1-1250H							

«Электро-Профи» - www.ep.ru

B

	NM1-250R 65	NM1-400S 35	NM1-400H 50	NM1-400R 70	NM1-630S 35	NM1-630H 50	NM1-630R 70	NM1-800H 60	NM1-800R 70	NM1-1250H 65
30										
30										
30										
35										
40										
50	30	40	50							
65										
65										
65		50	70		50	70	60	70	65	
65			70			70		70		
65		50	70		50	70	60	70	65	
65			70			70		70		
		50	70		50	70	60	70	65	
			70			70		70		
					50	70				
						70				
								70		

	NM1-250R 65	NM1-400S 35	NM1-400H 50	NM1-400R 70	NM1-630S 35	NM1-630H 50	NM1-630R 70	NM1-800H 60	NM1-800R 70	NM1-1250H 65
15										
20										
25										
35	20	25	35							
65										
65										
65		50	70							
65			70		50	70	60	70	65	
65		50	70			70		70		
65			70		50	70	60	70	65	
		50	70			70		70		
			70		50	70	60	70	65	
						70		70		
					50	70				
						70				
								70		

«Электро-Профи» - www.ep.ru

Air Circuit Breake

Leading every step, reliable new height



«Электро-Профи» - www.ep.ru

er



«Электро-Профи» - www.ep.ru

Air Circuit Breaker

ACB



NA8G

Page P-001



NA1

Page P-039

«Электро-Профи» - www.ep.ru



NA8G Air Circuit Breaker

1. General

1.1 Application scope

With rated current from 200A to 6300A, and rated service voltage of AC 415V or 690V, NA8G series air circuit breaker is mainly used in the distribution network with the circuit of AC 50HZ/60HZ to distribute electric energy and protect circuits and electric equipment against over-load, under-voltage, short- circuit, single-phase earthing fault.

Having art-oriented appearance, high breaking capacity, zero arcover and varities of intellectualized protection functions, the breaker can be used for selective protection with accurate action, no unnecessary power cut, and better power supply reliability.

That breaker can be widely used for power stations, factories, mines and modern tall buildings, especially the distribution system in the intelligent building, and also widely used in green projects such as wind and solar power generation.

1.2 Standard : IEC/EN 60947-2.

2. Operating conditions

2.1 Temperature condition:

-5℃~40℃; the average value within 24h shall not exceed +35℃ (special situation excluded);

2.2 Altitude:≤2000m;

2.3 Pollution grade: Grade 3;

2.4 Air conditions:

At mounting site, relative humidity not exceed 50% at the max temperature of +40℃, higher relative humidity is allowable under lower temperature, RH could be 90% at +20℃, special measures should be taken to occurrence of dews;

2.5 Note: Without the intelligent controller, the breaker functions as a switch-disconnector.

2.6 Type designation

NA8 G - □-□□/□-□-□-□-□

Voltage of secondary circuit
AC230V, AC400V
DC220V, DC110V

Wiring of main circuit:
H:Horizontal wiring of main circuit
V:Vertical wiring of main circuit

Mode of installation:
F:Fixed type
D:Draweout type

Mode of operation:
M:Manual
P: Power-driven

No. of poles:
3:3-pole
4:4-pole

Intelligent controller:
M: Standard type
H: Multifunctional type

Rated current:

Frame size rated current	Rated current
1600A	400A
	630A
	800A
	1000A
	1250A
	1600A
3200A	1600A
	2000A
	2500A
	3200A
4000A	2500A
	3200A
	4000A
6300A	4000A
	5000A
	6300A

Frame size rated current:
1600A, 3200A, 4000A, 6300A

Improved product code

Design sequence number

ACB

Company code

«Электро-Профи» - www.ep.ru

3. Product structure

Body structure

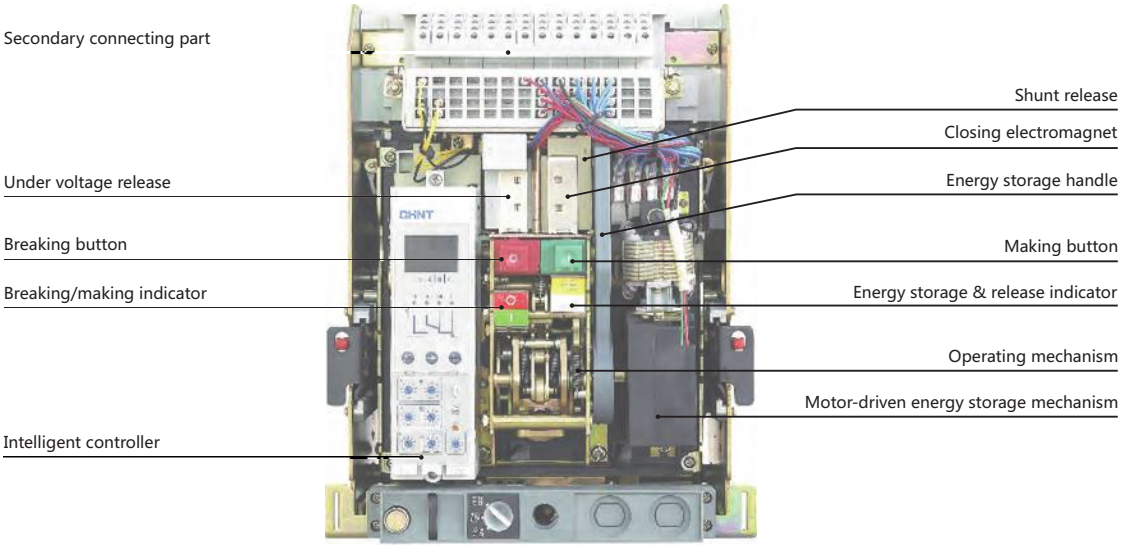

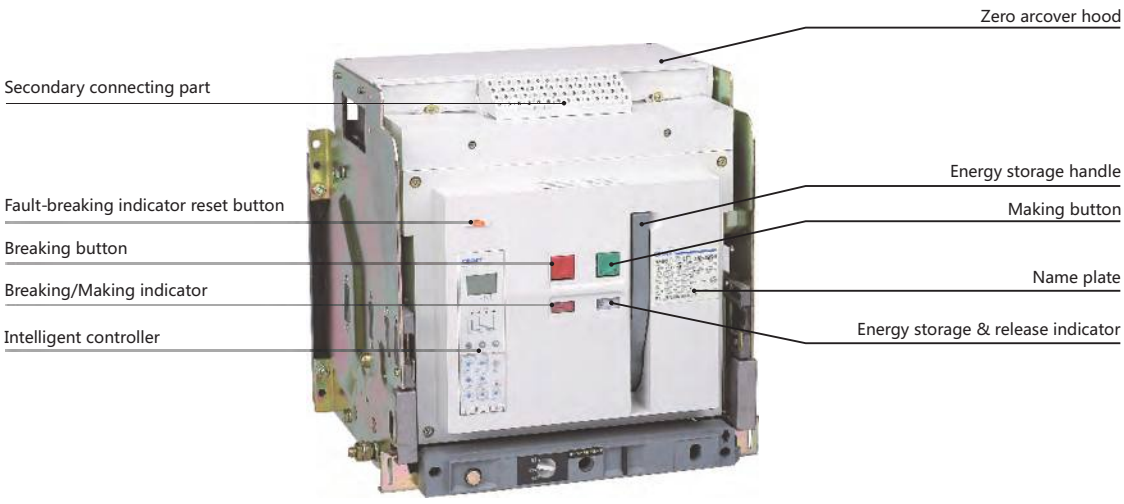

«Электро-Профи» - www.ep.ru

Breaker off and energy storage over

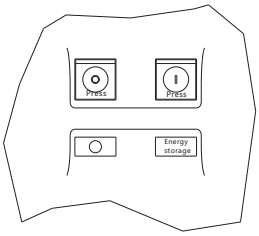

Breaker off and no energy storage

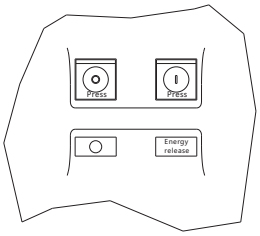

Breaker on and energy storage over

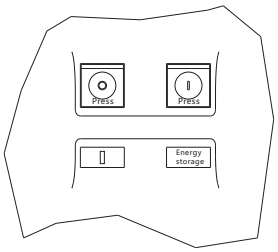

Breaker on and no energy storage

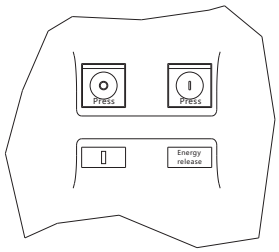

Drawout structure

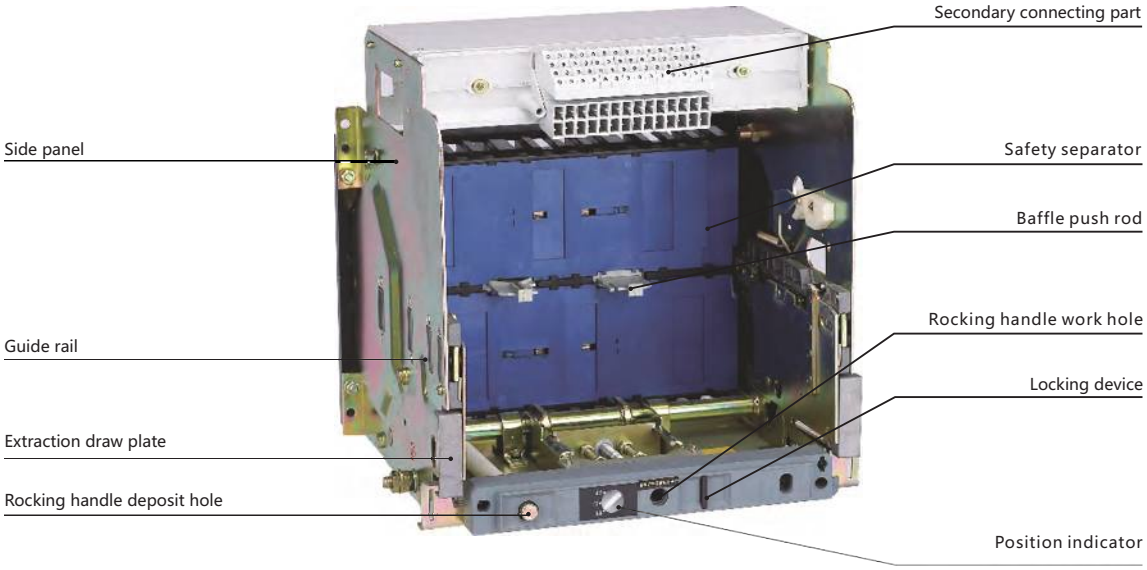

«Электро-Профи» - www.ep.ru

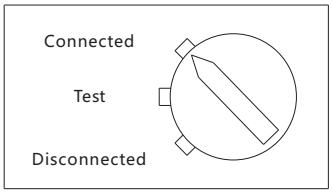

Connected: both main circuit and secondary circuit are connected

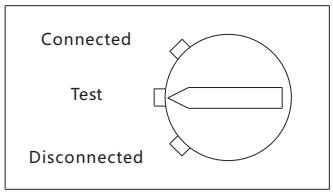

Test: the main circuit is disconnected,
the safety separator works well,
and the secondary circuit is connected.

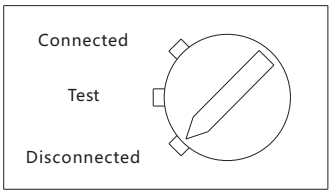

Disconnected: neither main circuit nor secondary circuit is connected

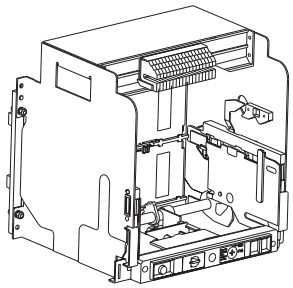

(1)Draw-out socket placed horizontally

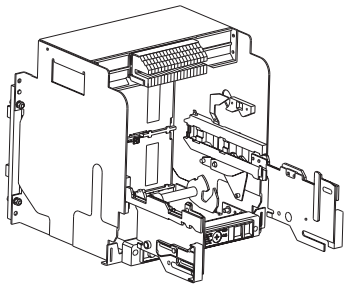

(2)Pull out the guide rail

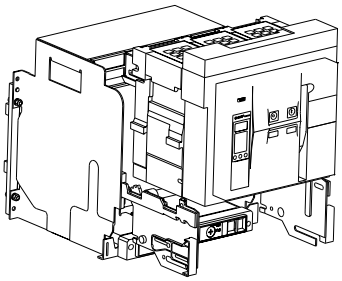

(3)Place the breaker body on the guide rail

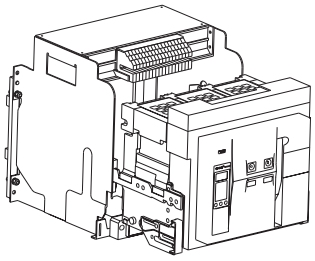

(4)Move the breaker body onto the guide rail with a snap

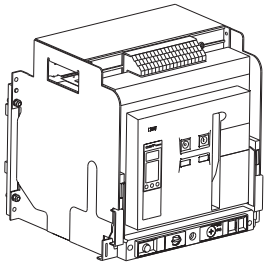

(5)Push the breaker body in, and turn the break body to the connected position

«Электро-Профи» - www.ep.ru

4. Main technical parameters

4.1 Main technical parameters

Shell grade rated current Inm (A)		1600	3200	4000	6300	
Rated current In (A)		400,630,800, 1000,1250,1600	1600,2000, 2500,3200	2500,3200,4000	4000,5000	6300
Nominal insulation voltage Ui (V)		690	1000	1000	1000	
Rated operational voltage Ue (V)		415 690	415 690	415 690	415	
Rated ultimate short circuit breaking capacity Icu (kA)		50 25	100 65	100 65	120	
Rated service short circuit breaking capacity Ics (kA)		40 20	80 65	100 65	100	
Rated short time withstand current Icw, 1s (kA)		40 20	80 65	85 65	100	
Number of poles		3P 4P	3P 4P	3P 4P	3P 4P	3P
Frequency of operation (number of times/hour)		20	10	10	10	
Number of operations	Mechanical life	3000	3000	3000	2000	
	Electrical Life	1000	1000	1000	500	
Flashover distance mm		0	0	0	0	
Wire incoming pattern		Wire to enter from the upper or lower port	Wire to enter from the upper or lower port	Wire to enter from the upper or lower port	Wire to enter from the upper or lower port	
Net weight (3 poles/4 poles)	fixed type (kg)	22/26.5	52.5/66.5	58/75	-	
	draw-out type (kg)	42.5/55	98/121	110/145	210/233	233
Size(3 poles/4 poles) Height × width × depth	fixed type	320×(254/324)×258	406×(422/537)×329	402×(432.5/547.5)×330	-	
	draw-out type	351×(282/352)×352	439.5×(435/550)×445	439.5×(435/550)×445	439×(813/928)×501	439×928×501

4.2 Capacity-reducing usage

4.2.1 Capacity-reducing at different temperatures

The following table shows the continual current-loading capacity of the circuit breakers and buses in each wiring mode at the corresponding ambient environment temperatures and under the conditions of the satisfaction of conventional heating with a similarity in capacity reducing between the breaker connected in a mixed way and the breaker connected horizontally.

Style wiring mode ambient temperature℃	Draw-out type									
	Front/rear horizontal wiring mode					Rear vertical wiring mode				
	-5~40	45	50	55	60	-5~40	45	50	55	60
1600	400	400	400	400	400	400	400	400	400	400
	630	630	630	630	550	630	630	630	630	580
	800	800	800	800	700	800	800	800	800	700
	1000	1000	1000	950	900	1000	1000	1000	950	900
	1250	1250	1250	1150	1050	1250	1250	1250	1200	1100
	1600	1550	1500	1450	1350	1600	1600	1550	1500	1450
3200	1600	1600	1600	1600	1600	1600	1600	1600	1600	1600
	2000	2000	2000	2000	1900	2000	2000	2000	2000	1950
	2500	2500	2500	2450	2350	2500	2500	2500	2500	2400
	3200	3200	3100	3000	2900	3200	3200	3200	3050	2900
4000	2500	2500	2500	2450	2350	2500	2500	2500	2500	2400
	3200	3200	3100	3000	2900	3200	3200	3200	3050	2900
	4000	3800	3600	3400	3200	4000	3800	3600	3400	3200
6300	4000	4000	4000	3900	3800	4000	4000	4000	3900	3800
	5000	5000	4700	4600	4400	5000	5000	4800	4650	4500
	6300	6100	6000	5500	5200	6300	6100	6000	5500	5200

«Электро-Профи» - www.ep.ru

4.2.2 Capacity-reducing at different altitudes

When the altitude is higher than 2000m, there will appear changes in insulation property, cooling performance, pressure,and the performance can be modified in reference to the following table.

Altitude(m)	2000	3000	4000	5000
Insulation withstand voltage(V)	3500	3000	2500	2000
Insulation voltage(V)	1000	800	700	600
Rated operational voltage(V)	690	580	500	400
Rated operational current(A)	1×In	0.96×In	0.92×In -	0.87×In

4.3 Power loss

Power loss is the loss at each pole which is measured when the breaker is charged with the rated current.

Power loss			
Breaker type	**Rated current**	**Draw-out type**	**Fixed type**
NA8G-1600	400	140	80
	630	161	100
	800	215	110
	1000	230	120
	1250	250	130
	1600	460	220
NA8G-3200	1600	390	170
	2000	470	250
	2500	600	260
	3200	670	420
NA8G-4000	2500	600	260
	3200	670	420
	4000	1047	656
NA8G-6300	4000	550	-
	5000	590	-
	6300	950	-

Note: The data and parameters in the above technical documentation results from tests and theoretical calculation, and can only be used as a general type selection guide.They cannot replace industrial practical experience or proof test.

5.4 Recommended bus for the breaker and recommendation for users to install the buses

Inm(A)		**NA8G-1600**						**NA8G-3200**				**NA8G-4000**			**NA8G-6300**		
In(A)		400	630	800	1000	1250	1600	1600	2000	2500	3200	250	3200	4000	4000	5000	6300
Busbar	Thickness(mm)	5	5	5	5	8	10	6	6	5	10	6	10	10	10	10	10
	Width(mm)	50	40	50	60	60	60	100	100	100	100	80	100	100	100	100	100
	Number of buses	1	2	2	2	2	2	2	3	4	4	4	4	5	5	7	8

«Электро-Профи» - www.ep.ru

5. Dimensions and connection

NA8G-1600 (In=400A ~1250A) Draw-out type
(Only horizontal connection is provided by the factory, vertical one has to be made by users themselves).

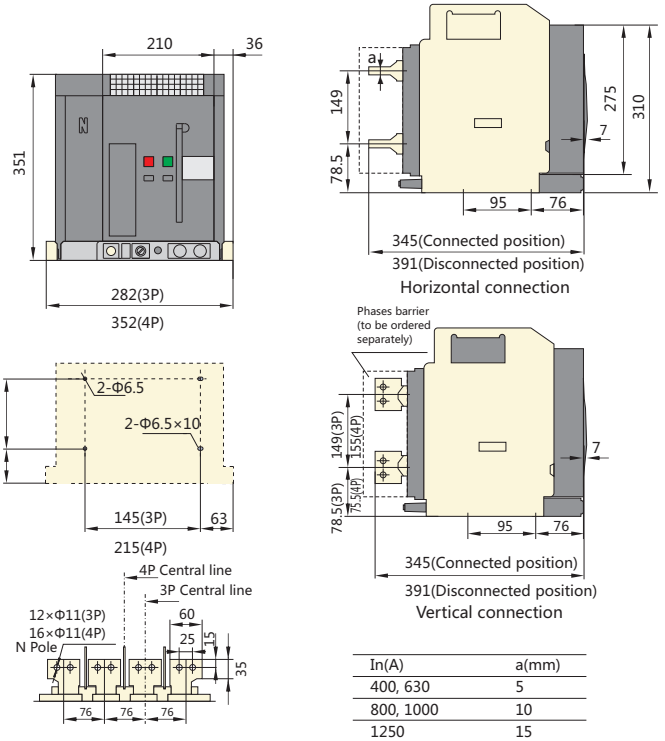

In(A)	a(mm)
400, 630	5
800, 1000	10
1250	15

Note: If users intend to change the horizontal connection into vertical connection, they need to replace the upper and lower busbars on both sides with the same one as the central busbar.

NA8G-1600 (In=1600A) Draw-out type
(Only horizontal connection is provided by the factory, vertical one has to be made by users themselves).

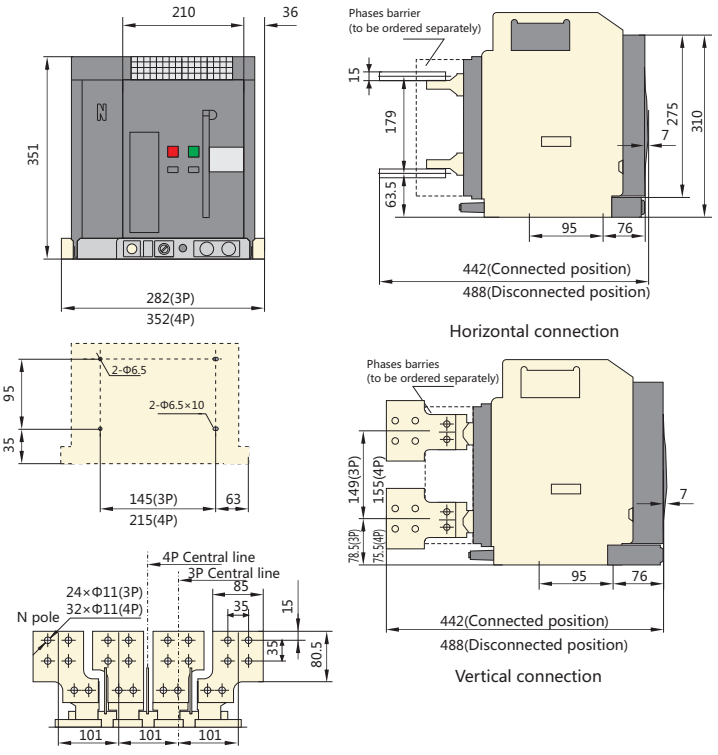

Note: If users intend to change the horizontal connection into vertical connection, they need to replace the upper and lower busbars on both sides with the same one as the central busbar.

«Электро-Профи» - www.ep.ru

NA8G-1600 (400A~1250A) Fixed type

(Only horizontal connection is provided by the factory, vertical one to has be made by users themselves).

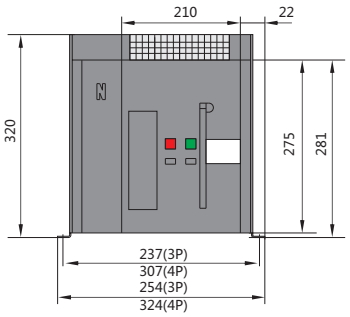

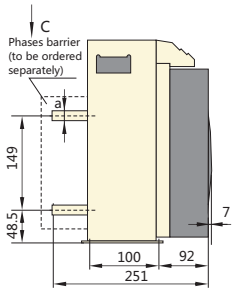

Horizontal connection

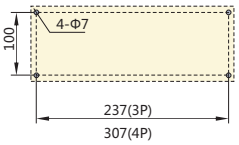

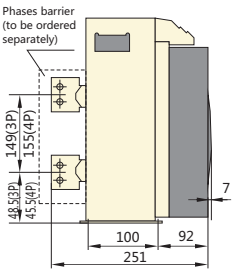

Vertical connection

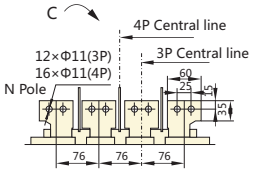

In(A)	a(mm)
400, 630	5
800, 1000	10
1250	15

Note: If users intend to change the horizontal connection into vertical connection, they need to replace the upper and lower busbars on both sides with the same one as the central busbar.

NA8G-1600 (In=1600A) Fixed type

(Only horizontal connection is provided by the factory, vertical one has to be made by users themselves).

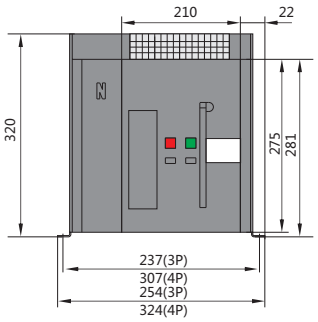

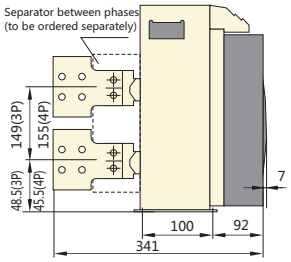

Vertical connection

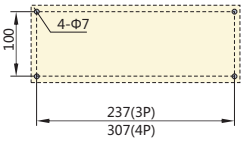

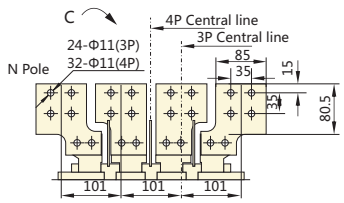

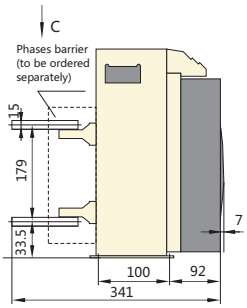

Horizontal connection

Note: If users intend to change the horizontal connection into vertical connection, they need to replace the upper and lower busbars on both sides with the same one as the central busbar.

«Электро-Профи» - www.ep.ru

NA8G-1600 Draw-out type
Size of the hole to be drilled on the panel

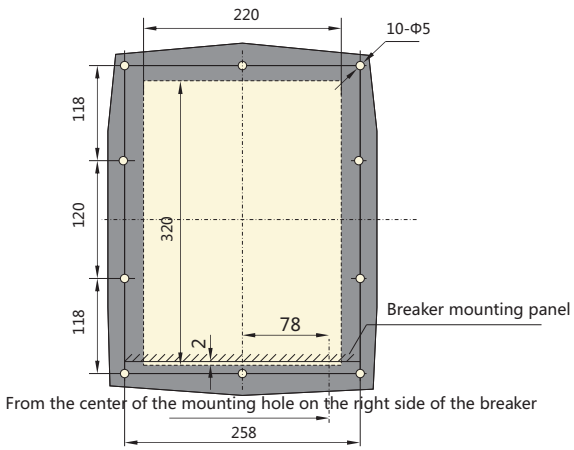

NA8G-1600 Fixed type
Size of the hole to be drilled on the panel

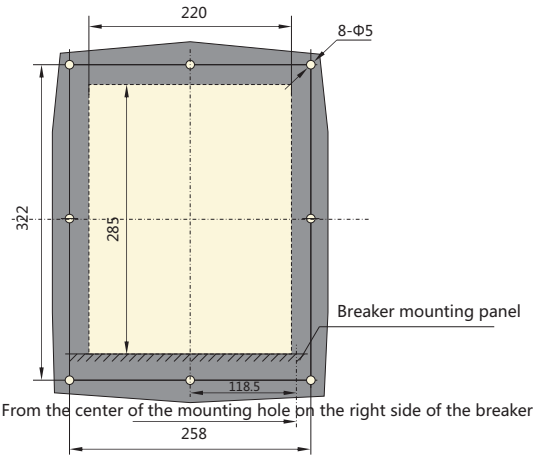

NA8G-3200 Draw-out type
Size of the hole to be drilled on the panel

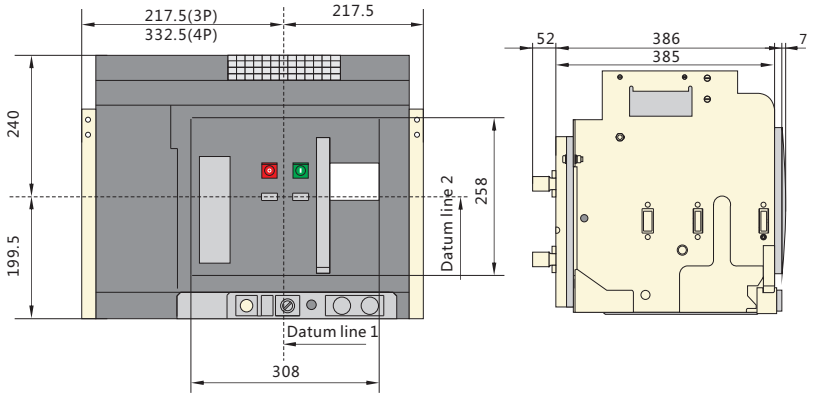

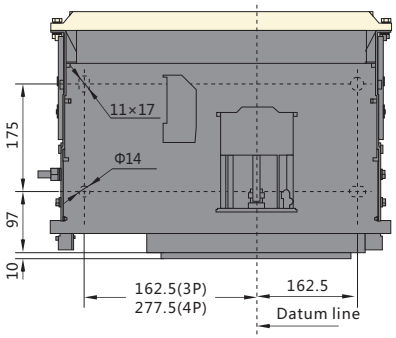

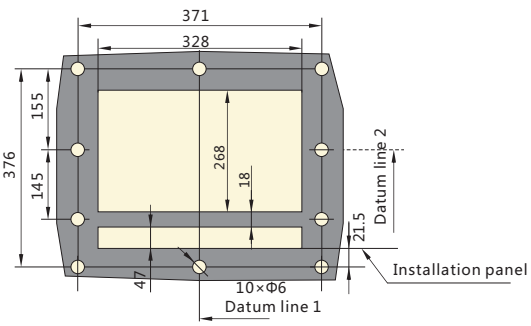

Size of the hole to be drilled on the panel

NA8G-3200(In=1600A~2500A) Draw-out type
(Only horizontal connection is provided by the factory).

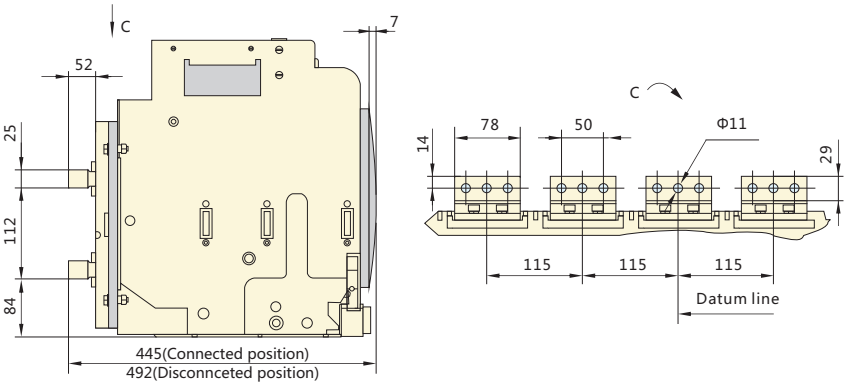

Note: If users want to change the horizontal connection into vertical connection, they only have to turn the busbar by 90°.

NA8G-3200(In=1600A~2500A) Draw-out type
(Vertical connection has to be made by users themselves).

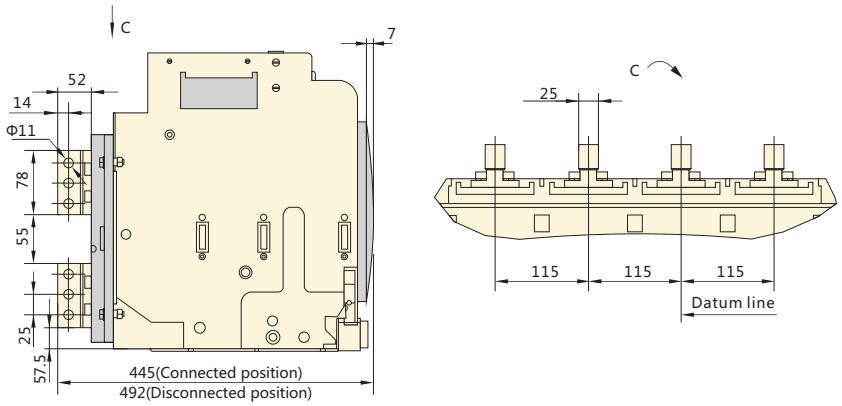

Note: If users want to change the vertical connection into horizontal connection, they only have to turn the busbar by 90°.

NA8G-3200 Draw-out type; Front connection

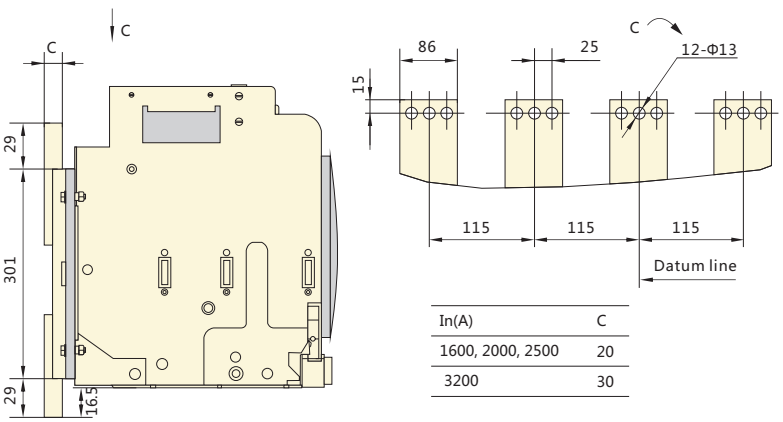

In(A)	C
1600, 2000, 2500	20
3200	30

«Электро-Профи» - www.ep.ru

NA8G-3200(In= 3200A) Draw-out type (Only horizontal connection is provided by the factory)

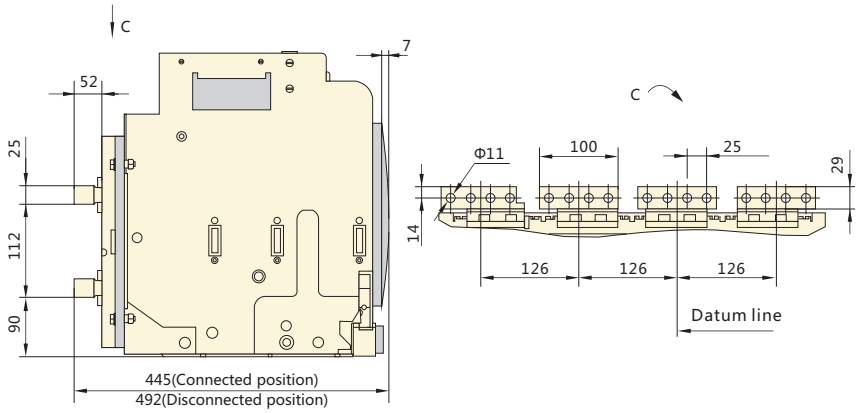

NA8G-3200(In= 3200A) Draw-out type (Vertical connection has to be made by users themselves)

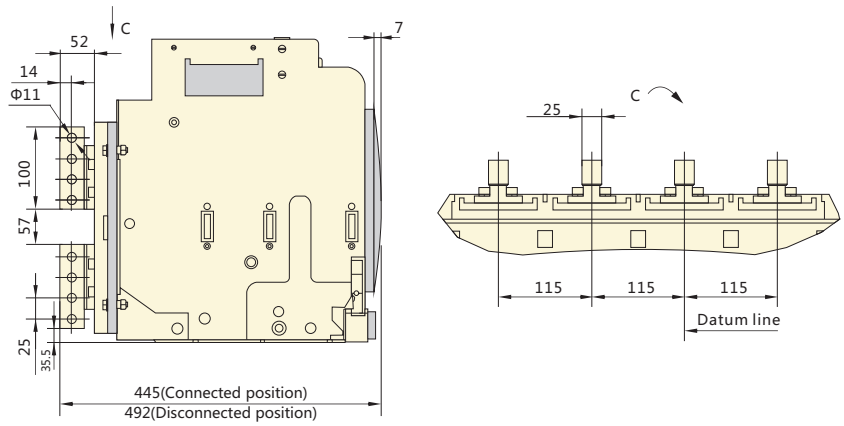

Note: If users want to change the horizontal connection into vertical connection,
it is necessary to replace the upper and lower busbars for the N and B phases with the same one as the A and C phases.

NA8G-3200 Fixed type

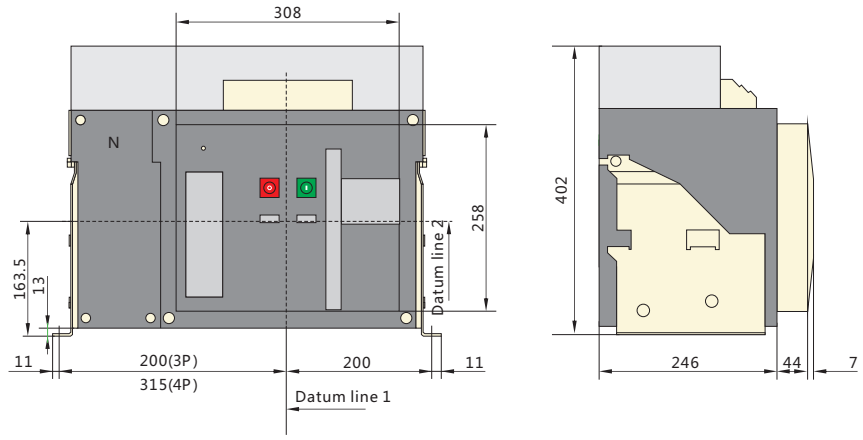

«Электро-Профи» - www.ep.ru

NA8G-3200 Fixed type, size of the hole to be drilled on the panel

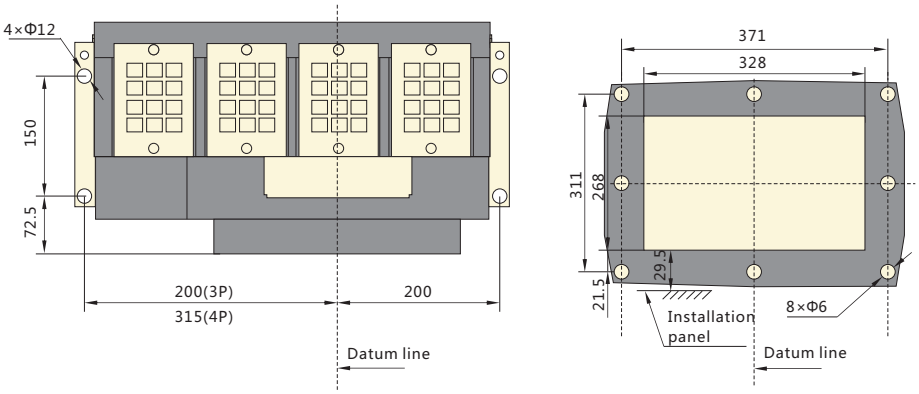

NA8G-3200 Fixed type (Only horizontal connection is provided by the factory)

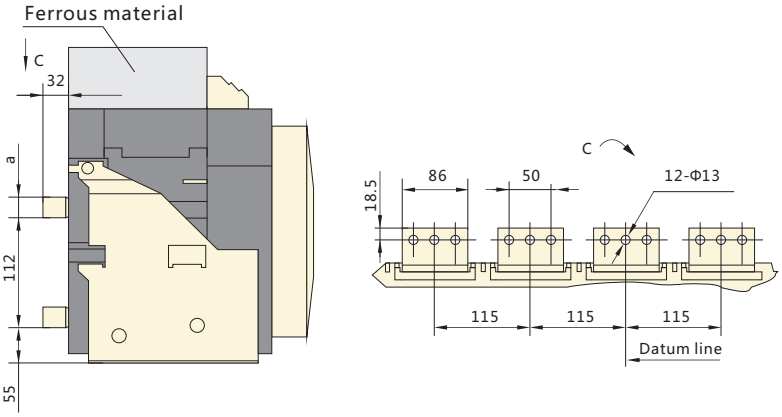

In(A)	a(mm)
1600~2500	20
3200	30

Note: If users want to change the horizontal connection into vertical connection, they only have to additionally install vertical busbars.

NA8G-3200 Fixed type (Vertical connection has to be made by users themselves)

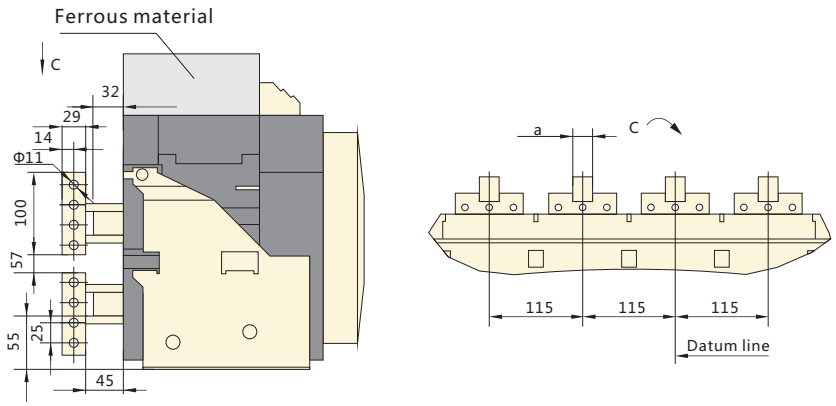

In(A)	a(mm)
1600~2500	20
3200	30

Note: If users want to change the horizontal connection into vertical connection, they only have to additionally install vertical busbars.

«Электро-Профи» - www.ep.ru

NA8G-4000 Draw-out type, size of the hole to be drilled on the panel

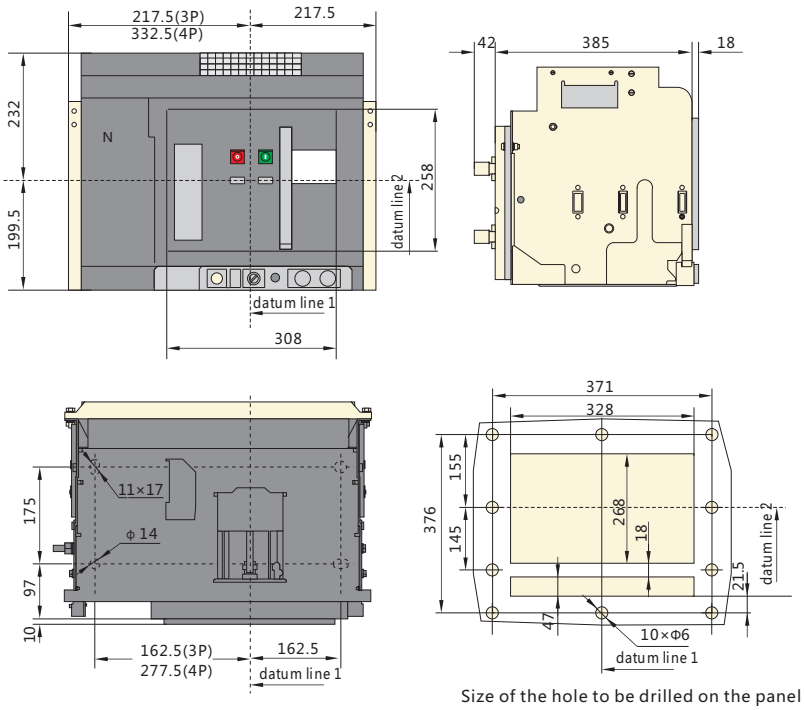

Size of the hole to be drilled on the panel

NA8G-4000(In=2500A) Draw-out type (only horizontal connection is provided by the factory)

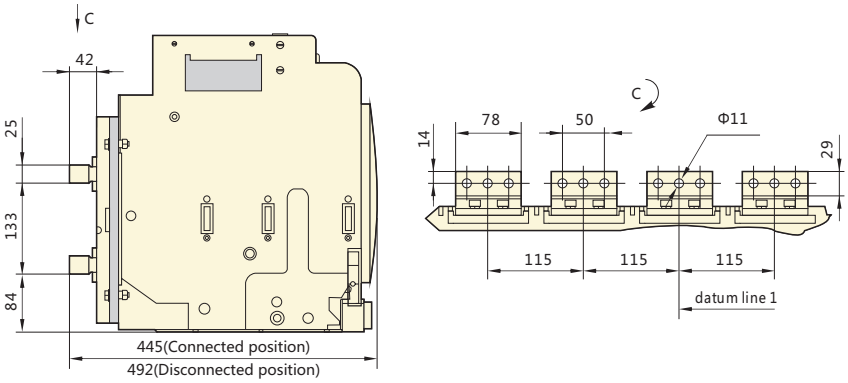

Note: If users want to change the horizontal connection into vertical connection,they only have to rotate the busbars by 90°.

NA8G-4000(In=2500A) Draw-out type (vertical connection has to be made by users themselves)

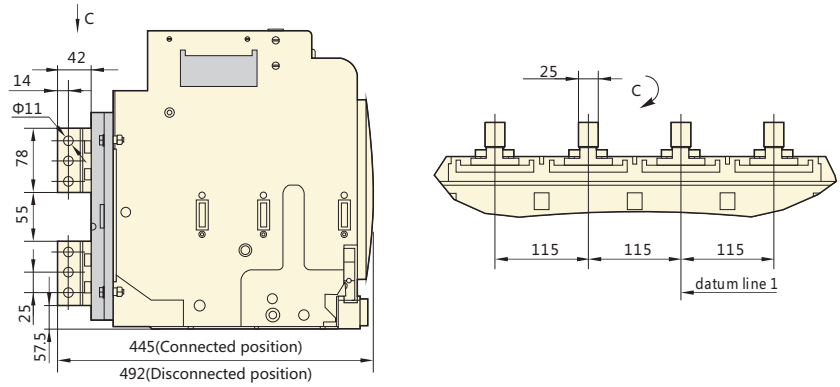

Note: If users want to change the horizontal connection into vertical connection,they only have to rotate the busbars by 90°.

«Электро-Профи» - www.ep.ru

NA8G-4000 Draw-out type, size of the hole to be drilled on the panel

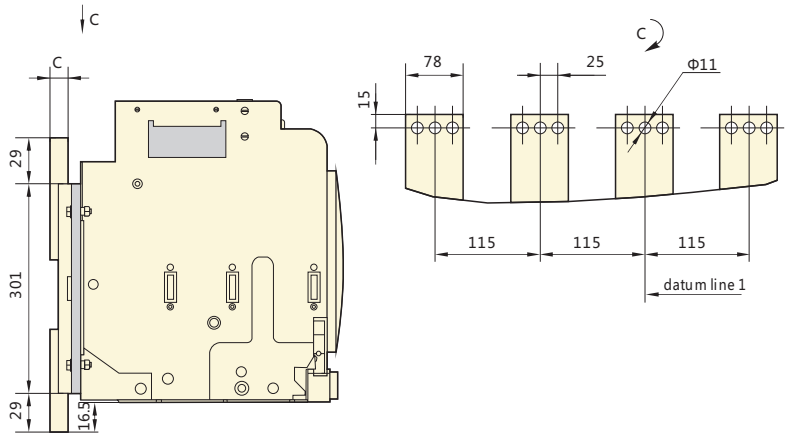

In(A)	C
2500	25
3200~4000	30

NA8G-4000(In=3200A~4000A) Draw-out type (only horizontal connection is provided by the factory)

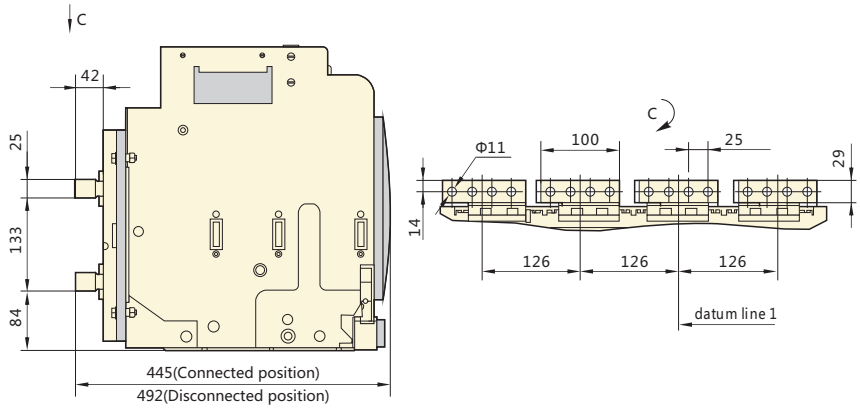

Note: If users want to change the horizontal connection into vertical connection,they only have to change the busbar of N、B phases to A、C phases.

NA8G-4000(In=3200A~4000A) Draw-out type (vertical connection has to be made by users themselves)

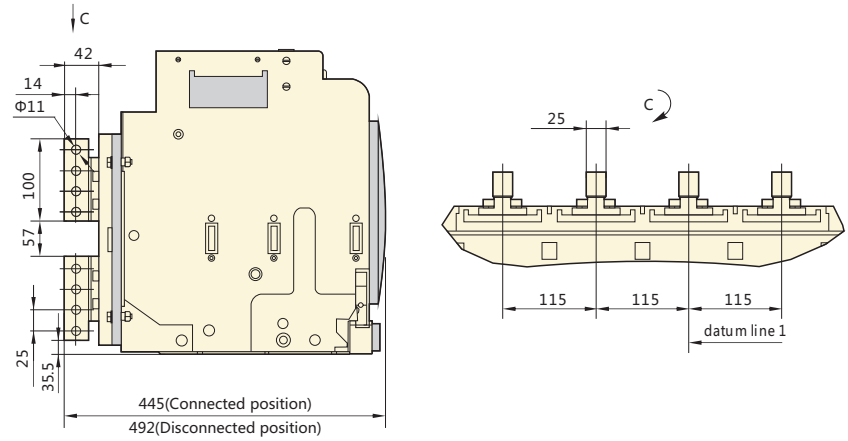

Note: If users want to change the horizontal connection into vertical connection,they only have to change the busbar of N、B phases to A、C phases.

«Электро-Профи» - www.ep.ru

NA8G-4000 Fixed type , outline dimension

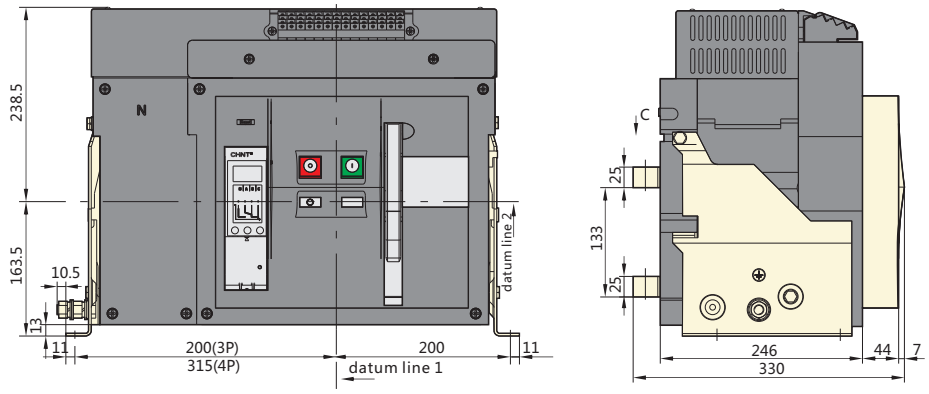

NA8G-4000 Fixed type ,size of the hole to be drilled on the panel

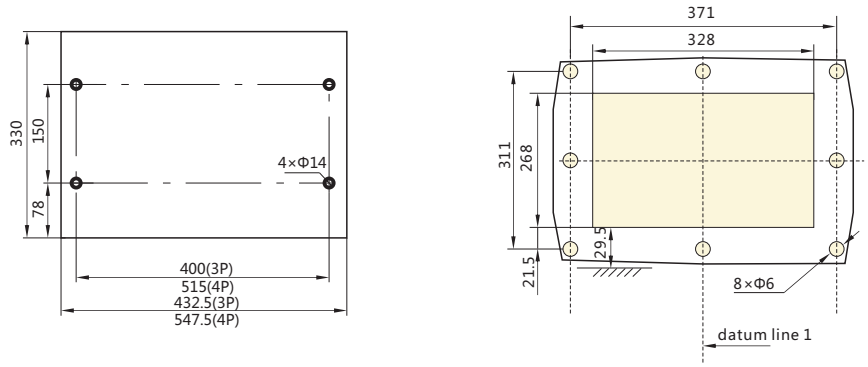

NA8G-4000(In=2500A) Fixed type (only horizontal connection is provided by the factory)

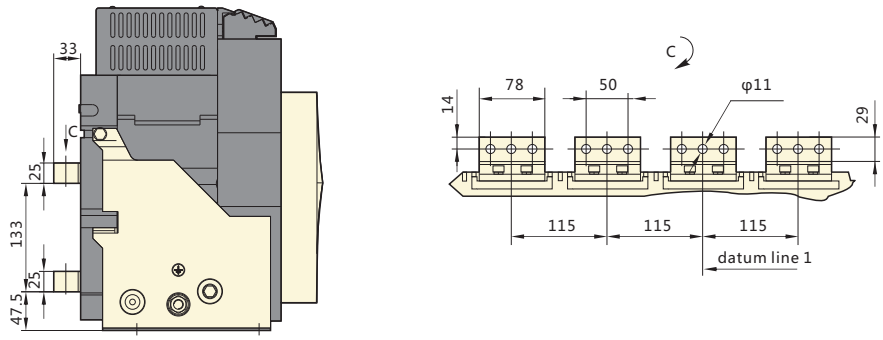

Note: If users want to change the horizontal connection into vertical connection,they only have to rotate the busbars by 90°.

NA8G-4000(In=2500A) Fixed type (vertical connection has to be made by users themselves)

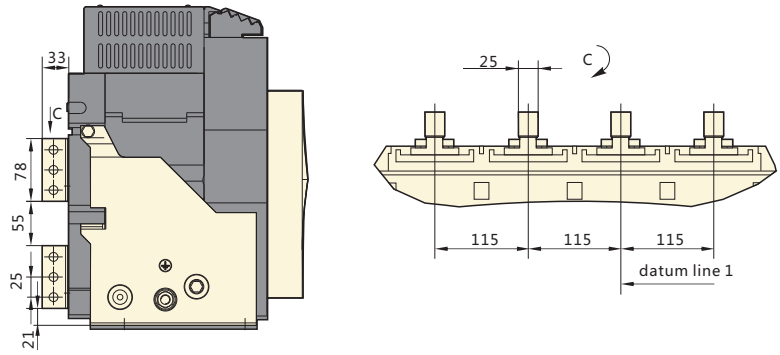

Note: If users want to change the horizontal connection into vertical connection,they only have to rotate the busbars by 90°.

«Электро-Профи» - www.ep.ru

NA8G-4000 Fixed type , outline dimension(Front connection)

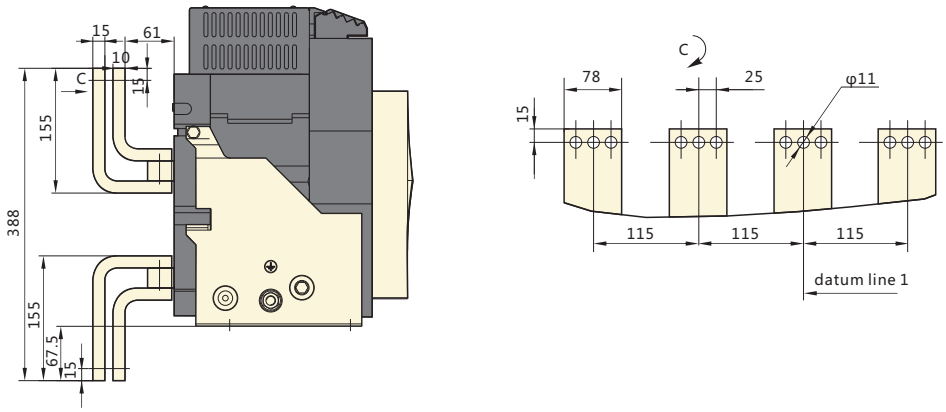

NA8G-4000(In=3200A~4000A) Fixed type (only horizontal connection is provided by the factory)

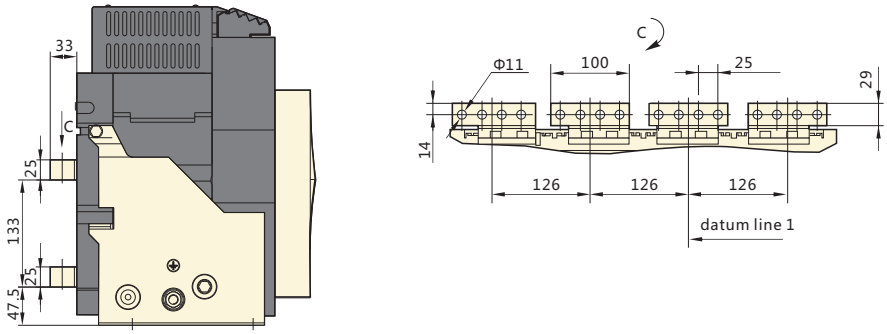

Note: If users want to change the horizontal connection into vertical connection,they only have to change the busbar of N、B phases to A、C phases.

NA8G-4000(In=3200A~4000A) Fixed type (vertical connection has to be made by users themselves)

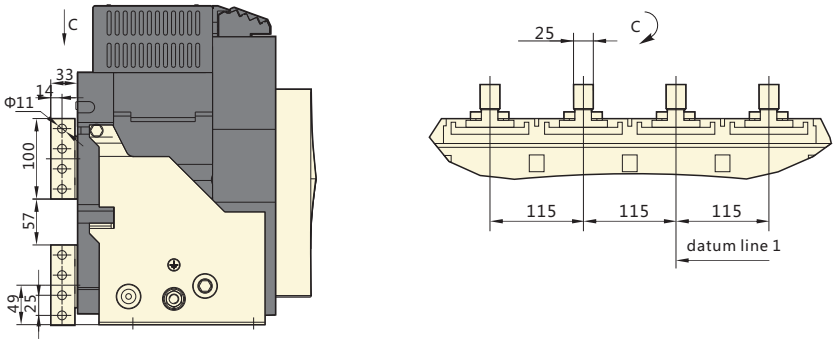

Note: If users want to change the horizontal connection into vertical connection,they only have to change the busbar of N、B phases to A、C phases.

«Электро-Профи» - www.ep.ru

NA8G-6300 In=(4000A~5000A) Draw-out type
Size of the hole to be drilled on the panel

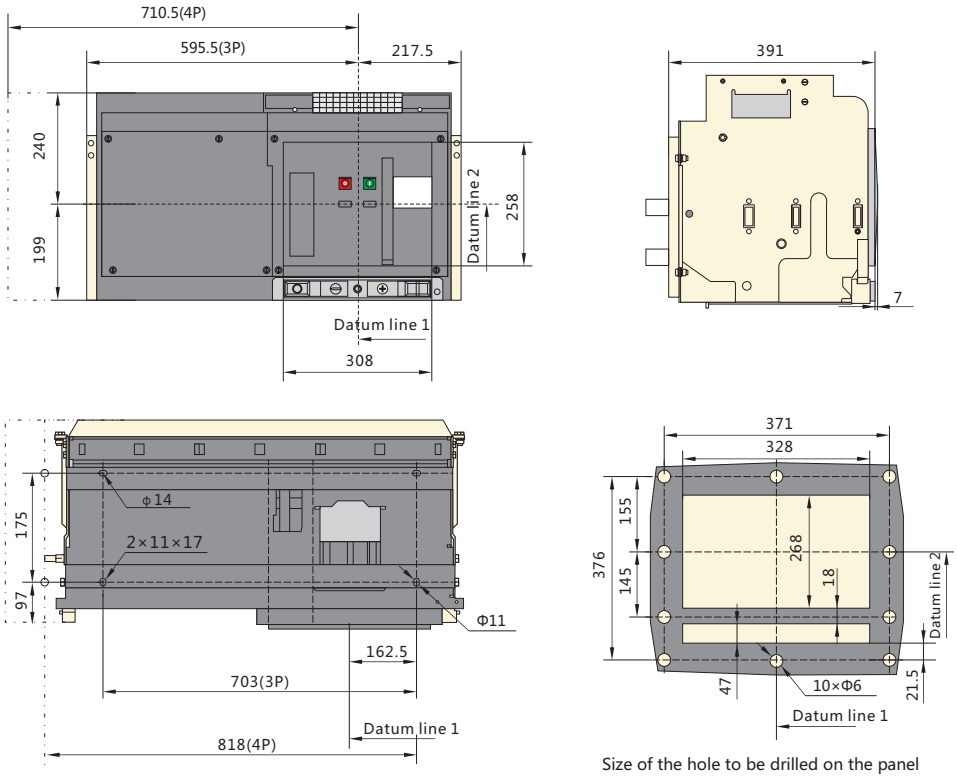

Size of the hole to be drilled on the panel

NA8G-6300 In=(6300A) Draw-out type
Size of the hole to be drilled on the panel

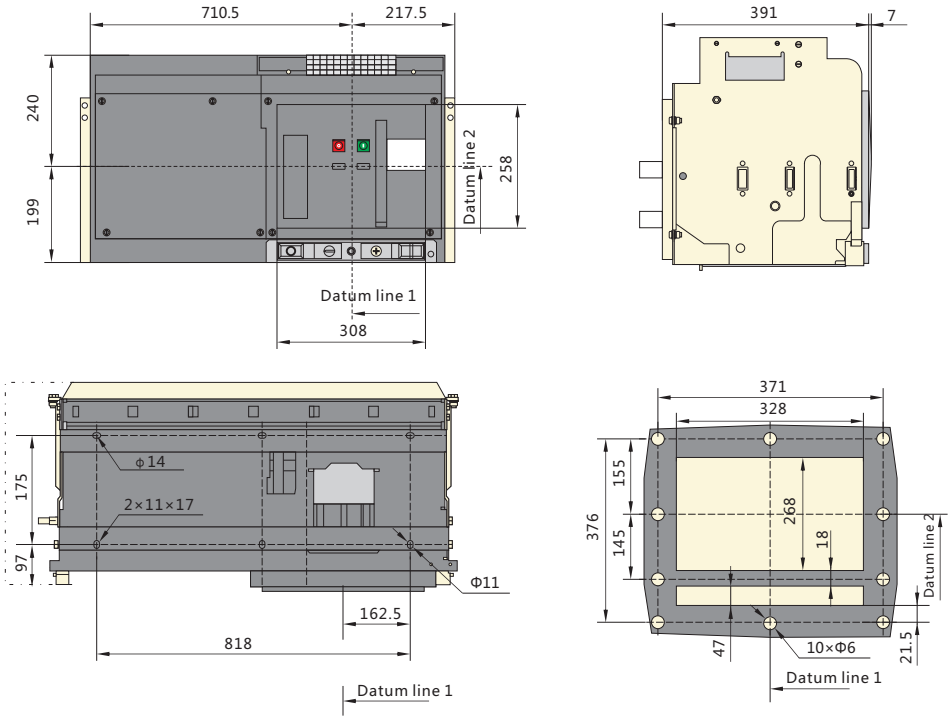

Size of the hole to be drilled on the panel

NA8G-6300(In=4000A~5000A) Draw-out type
(Vertical connection has to be made by users themselves)

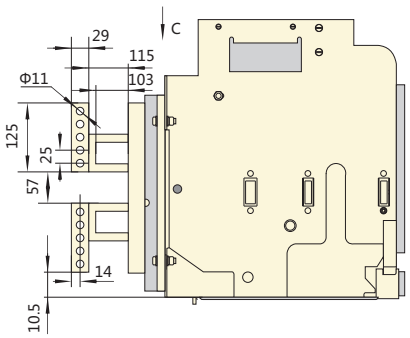

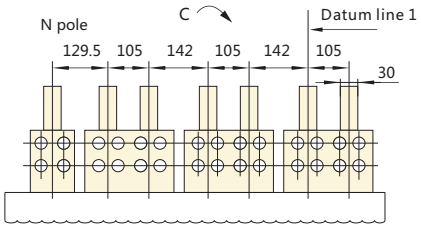

Note: If users want to change the horizontal connection into vertical connection, they only have to additionally install vertical busbars.

NA8G-6300(In=4000A~5000A) Draw-out type (Only horizontal connection is provided by the factory)

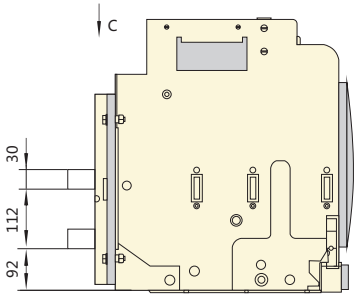

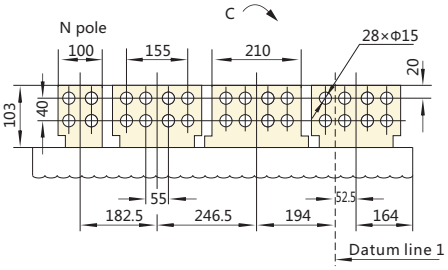

Note: If users want to change the horizontal connection into vertical connection, they only have to additionally install vertical busbars.

NA8G-6300(In=6300A) Draw-out type (Vertical connection has to be made by users themselves)

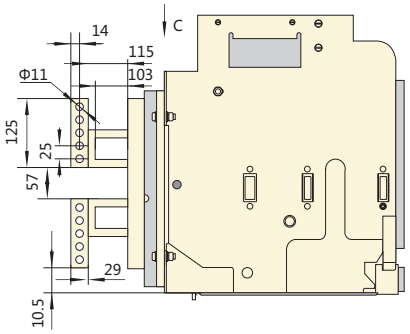

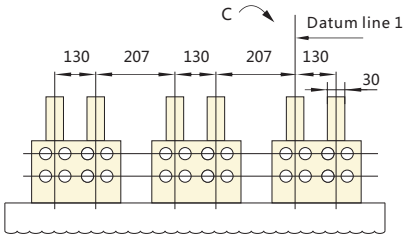

Note: If users want to change the horizontal connection into vertical connection, they only have to additionally install vertical busbars.

NA8G-6300(In=6300A) Draw-out type (Only horizontal connection is provided by the factory)

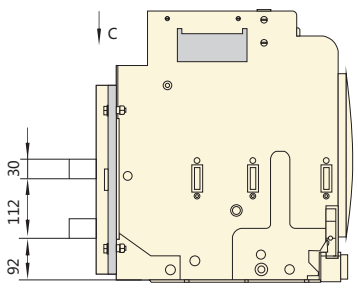

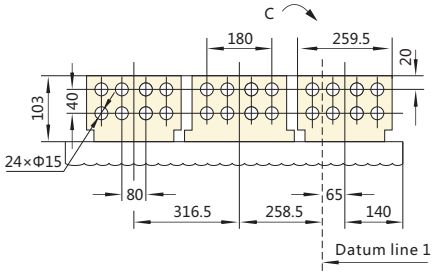

Note: If users want to change the horizontal connection into vertical connection, they only have to additionally install vertical busbars.

«Электро-Профи» - www.ep.ru

6. Secondary circuit wiring

Connection diagram for the secondary circuit of NA8G-1600 with standard type intelligent controller

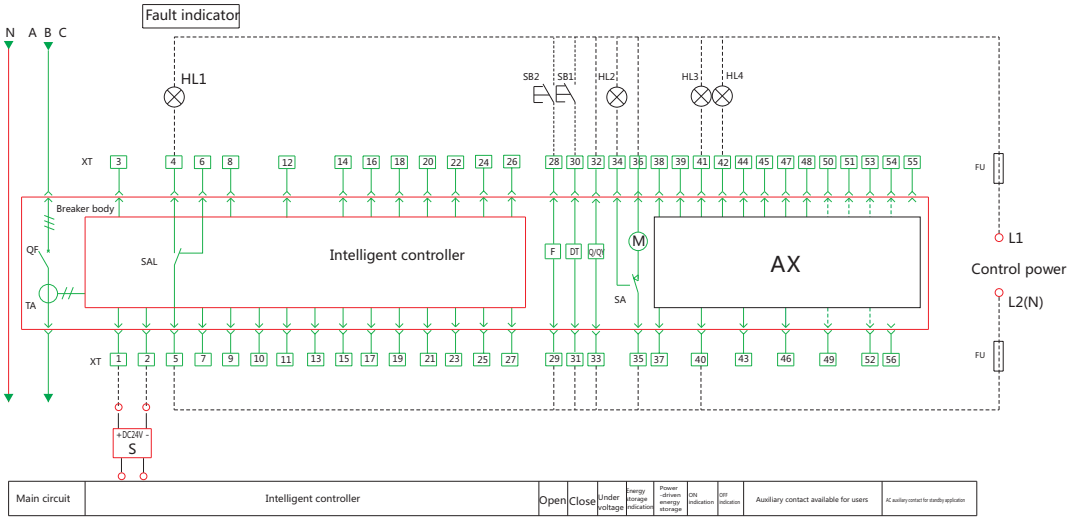

DT——closing electromagnet
SA——travel switch
SB1~SB2——pushbutton
QF——breaker

F——shunt release
M——energy storage motor
HL1~HL4——indicator light
S——power module

Q/QY—under voltage release
AX—auxiliary contact
XT—connection terminal
SAL—sensitive switch

FU—fuse
TA—current transformer

#1 and #2: input (terminals) for intellectual controller auxiliary power supply
#4, #5 and #6: faulty tripping contact output (#5 is the common terminal, AC250V 5A)

The auxiliary contact modes for customer use

Ⅰ Four switch contact (acquiescence)

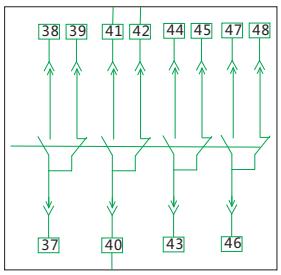

Ⅱ Six switch contact

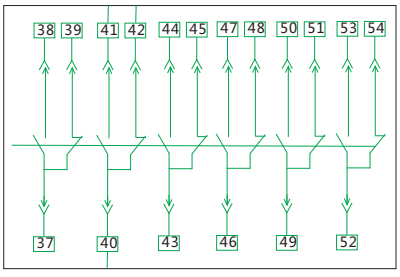

Ⅲ Three open and three close contact

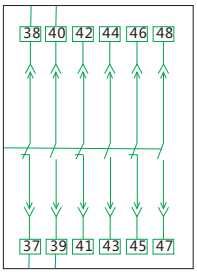

Notes: 1. Four switch contact is the normal auxiliary contact mode.When special order is made for alternating current, six switch contact, three open and three close contact can be selectedadditionally. Four switch contact is the only mode in case of direct current.
2. When the controller voltage is AC230/400V, it can be directly put into #1 and #2; if the voltage is DC220/110V, it has to be put into #1 and #2 after the power module output DC24V.
3. The wiring for the part indicated by dashed lines shall be made by users.

«Электро-Профи» - www.ep.ru

Connection diagram for the secondary circuit of NA8G-3200 to 6300 with standard type intelligent controller

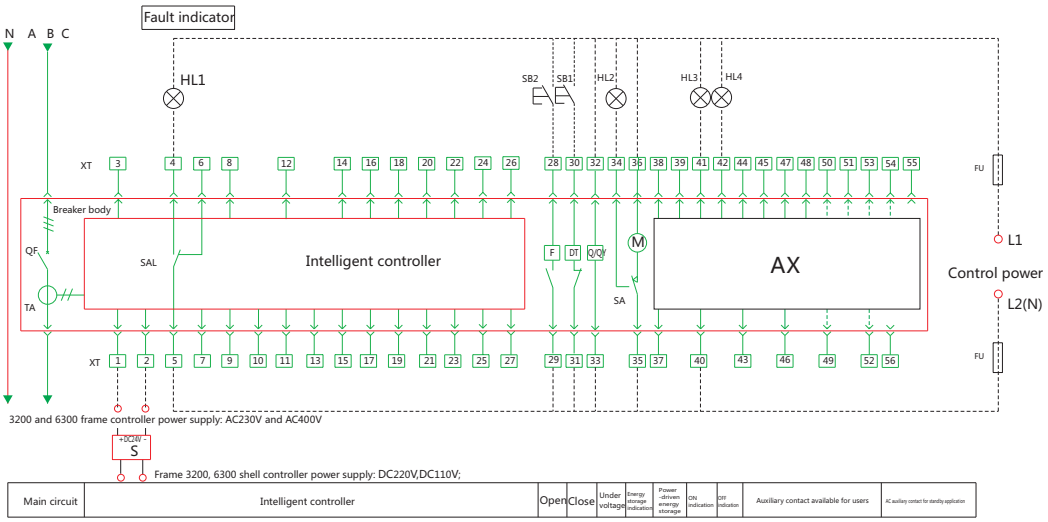

DT——closing electromagnet
SA——travel switch
SB1~SB2——pushbutton
QF——breaker

F——shunt release
M——energy storage motor
HL1~HL4——indicator light
S——power module

Q/QY—under voltage release
XT—connection terminal
AX—Auxiliary contact
SAL—sensitive switch

FU—fuse
TA—current transformer

#1 and #2: input (terminals) for intelligent controller auxiliary power supply
#4, #5 and #6: faulty tripping contact output (#5 is the common terminal, AC250V 5A)

The auxiliary contact modes for customer use

Ⅰ Four switch contact (acquiescence)

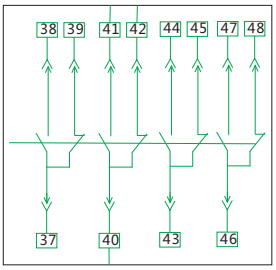

Ⅱ Six switch contact

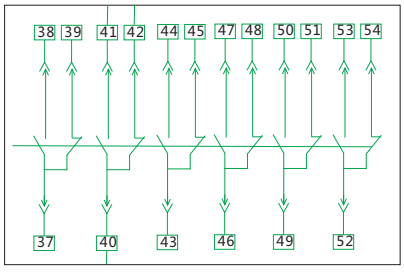

Ⅲ Four open and four close contact

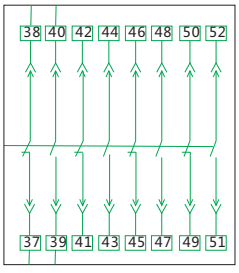

Ⅳ Five open and five close contact

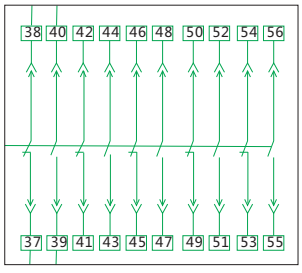

Notes: 1. Four switch contact is the normal auxiliary contact mode. When special order, six switch contact, four open and four close contact, five open and five close contact can be selected additionally.
2. When the controller voltage of frame 3200 and 6300 is AC230V/400V, it can be directly put to #1 and #2; if the voltage is DC220V/110V, it has to be put to #1 and #2 after the power module outputs DC24V.
3. The wiring of the part indicated by dashed lines shall be made by users.

«Электро-Профи» - www.ep.ru

Connection diagram for the secondary circuit of NA8G-1600 with multifunctional type intelligent controller

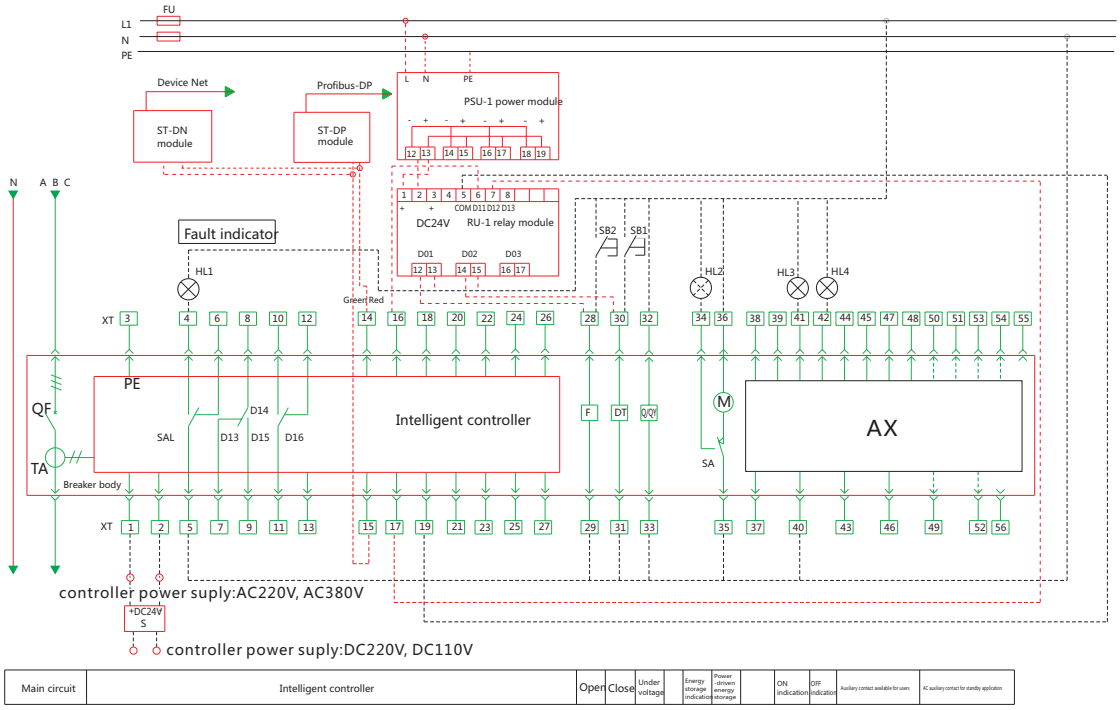

DT——closing electromagnet
SA——travel switch
SB1~SB2——pushbutton
QF——breaker
PSU-1——power module (optional)

F——shunt release
M——energy storage motor
HL1~HL4——indicator light
S——power module
AX—Auxiliary contact

Q/QY—under voltage release
XT—connection terminal
ST-DP —communication module
ST-DN—communication module
SAL—sensitive switch

FU—fuse
TA—current transformer
RU-1—relay module (optional)

#1 and #2: input (terminals) for intelligent controller auxiliary power supply
#3 : PE
#4, #5 and #6: faulty tripping contact output (#5 is the common terminal, AC250V 5A)
#7, #8 and #9: auxiliary contact output (#8 is the common terminal, AC250V 5A)
#10, #11 and #12: auxiliary contact output (#11 is the common terminal, AC250V 5A)
#14 and #15 : RS485 communication interfaces (in case of communication type)
#16, #17, #18, #19, #26 and #27: programmable input/output points (DC110V 0.5A, AC250V, 5A)
#20, #21, #22, and #23: A, B, C, and N voltage signal output (in case of multifunction type) (maximum voltage AC400V)
#24 and #25: to be externally connected to the mutual inductor input

The auxiliary contact modes for customer use

Ⅰ Four switch contact (acquiescence)

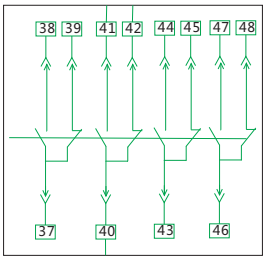

Ⅱ Six switch contact

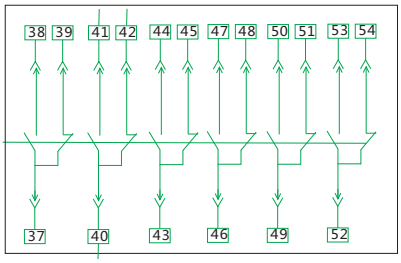

Ⅲ Three open and three close contact

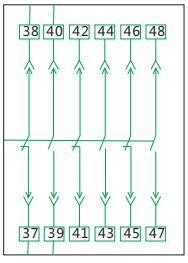

Notes: 1. Notes: 1. Four switch contact is the normal auxiliary contact mode. When special order is made for alternating current, six switch contact, three open and three close contact can be selected additionally. Four switch contact is the only mode in case of direct current.
2. The wiring of the part indicated by dashed lines to be made by users.
3. When the controller voltage is AC230/400V, it can be directly put into #1 and #2; if the voltage is DC220/110V, it has to be put into #1 and #2 after the power module output DC24V.

«Электро-Профи» - www.ep.ru

Connection diagram for the secondary circuit of NA8G-3200 and 6300 with multifuctional type itelligent controller.

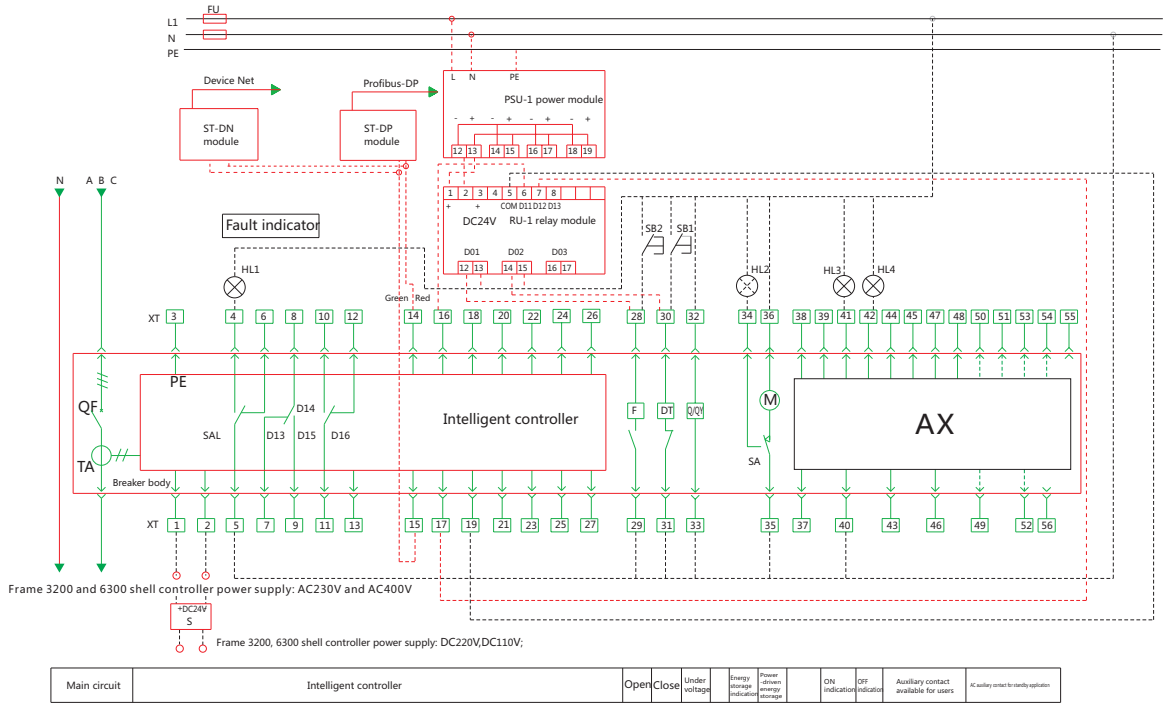

DT——closing electromagnet
SA——travel switch
SB1~SB2——pushbutton
QF——breaker
PSU-1——power module (optional)

F——shunt release
M——energy storage motor
HL1~HL4——indicator light
S——power module
AX—Auxiliary contact

Q/QY—under voltage release
XT—connection terminal
ST-DP —communication module
ST-DN—communication module
SAL—sensitive switch

FU—fuse
TA—current transformer
RU-1—relay module (optional)

#1 and #2: input (terminals) for intelligent controller auxiliary power supply
#3 : PE
#4, #5 and #6: faulty tripping contact output (#5 is the common terminal, AC250V 5A)
#7, #8 and #9: auxiliary contact output (#8 is the common terminal, AC250V 5A)
#10, #11 and #12: auxiliary contact output (#11 is the common terminal, AC250V 5A)
#14 and #15 : RS485 communication interfaces (in case of communication type)
#16,#17, #18, #19, #26 and #27: programmable input/output points (DC110V 0.5A, AC250V, 5A)
#20, #21, #22, and #23: A, B, C, and N voltage signal output (in case of multifunction type) (maximum voltage AC400V)
#24 and #25: to be externally connected to the mutual inductor input

The auxiliary contact modes for customer use

Ⅰ Four switch contact (acquiescence)

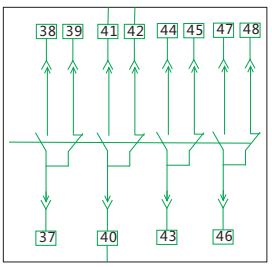

Ⅱ Six switch contact

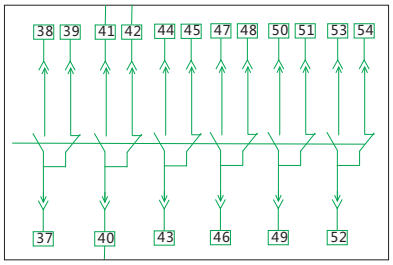

Ⅲ Four open and four close contact

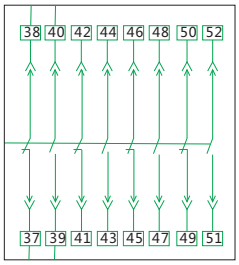

Ⅳ Five open and five close contact

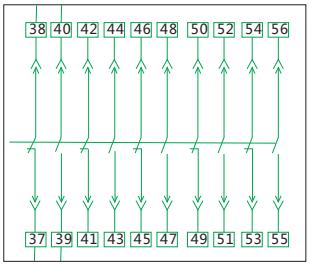

Notes: 1. Four switch contact is the normal auxiliary contact mode. When special order, six switch contact, four open and four close contact, five open and five close contact can be selected additionally.
2. When the controller voltage of the 3200 and 6300 shells is AC230V/400V, it can be directly put to #1 and #2;if the voltage is DC220V/110V, it has to be put to #1 and #2 after the power module inputs DC24V.
3. The wiring of the part indicated by the dashed lines shall be made by users.

7. Intelligent controller and protective characteristics

7.1 User interface of the standard type controller

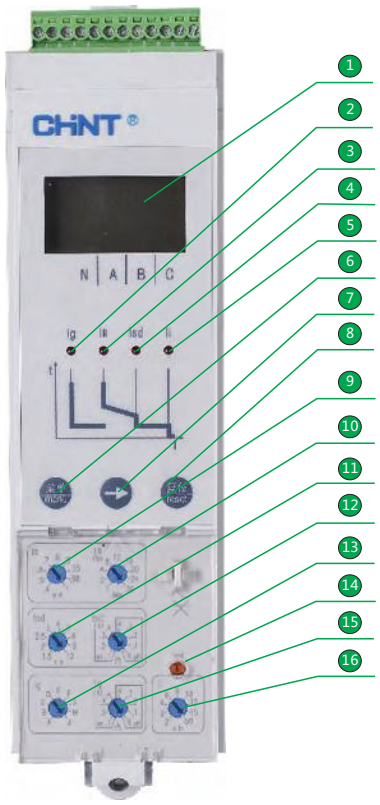

1	LED window	LED window capable of showing the current for each phase, various setting parameters, rated current, fault current, tripping time, and the like
2	" Ig " limp	Single-phase earthing fault indicator
3	" IR " limp	Long time-delay overcurrent fault indicator
4	" Isd " limp	Short-circuit short time-delay overcurrent
5	" Ii " limp	Short-circuit instantaneous overcurrent fault indication
6	" MENU " Pushbutton	Successively access to submenus at various levels by pressing the MENU key To inquire the current for each phase at present: recurrently select the contents in the menus at various levels
7	" ⟵ " Pushbutton	Return to previous menu; the intelligent controller software is reset;
8	" RESET " Pushbutton	RESET key must be pressed after the encoder switch position is adjusted; the intellectual controller faulty tripping results in fault memory which can be cleared only by pressing the RESET key;
9	" IR " Knob switch	There are (0.4, 0.5, 0.6, 0.7, 0.8, 0.9, 0.95, 0.98, 1.0)In, nine settings altogether, for the current multiple setting of long time-delay overcurrent.
10	" tR " Knob switch	There are (1, 2, 4, 8, 12, 16, 20, 24, 30)s, nine settings altogether, for the time delay time setting of long time-delay overcurrent in case of 6IR.
11	" Isd " Knob switch	There are (1.5, 2, 2.5, 3, 4, 5, 6, 8, 10)Ir, nine settings altogether, for the current multiple setting of short-time short time-delay.
12	" tsd " Knob switch	For the short-circuit short time-delay time setting, there are nine settings: the inverse time limit, i.e., I^2t on(0.1, 0.2, 0.3, 0.4)s, the definite-time limit, i.e., I^2t OFF (0.1 0.2 0.3 0.4)s and X, i.e., closing the short time-delay
13	" Ig " Knob switch	There are (A, B, C, D, E, F G, H, J), nine settings altogether, for the current multiple setting of single-phase earthing.
14	" test " Pushbutton	Button for simulating instantaneous tripping test
15	" tg " Knob switch	For the time setting of single-phase earthing, there are nine settings: the inverse time limit, i.e., I^2t on(0.1, 0.2, 0.3, 0.4)s, and the definite-time limit, i.e., I^2t OFF(0.1 0.2 0.3 0.4)s, and X, i.e., closing the single-phase earthing.
16	" Ii " Knob switch	Short-circuit instantaneous current multiple setting.

«Электро-Профи» - www.ep.ru

7.2 Default interface and operation method for the standard type controller

The default interface for the standard type controller is described as follows: (The current for each phase to be selected by pressing "→")

Press "MENU"key once to go to the status for parameter query as follows, and then press"→"to go to query the setting parameter of quadruple overcurrent protection.

Default interface of the standard type controller

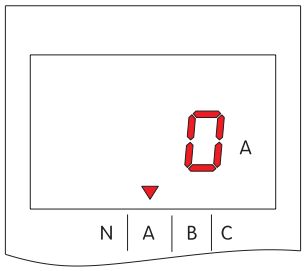

Status for parameter query—setting current of long time-delay

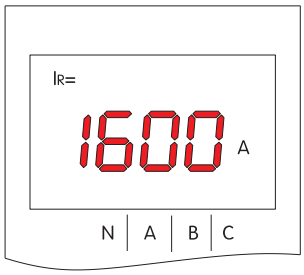

Press "MENU" key twice to go to the status for fault query as follows,show the latest fault information:

Status for fault query—tripping current

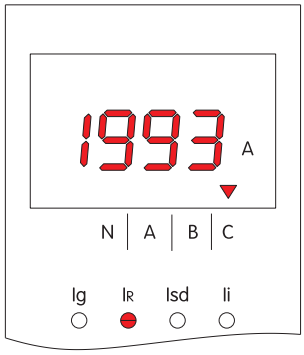

Status for fault query—tripping time

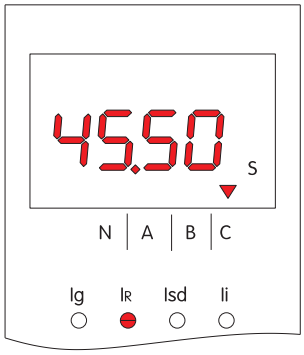

Press "TEST" key to go to the status for simulating tripping test in case of $6I_{R}$, and after tripping as follows:

Status of simulating tripping test—simulating current

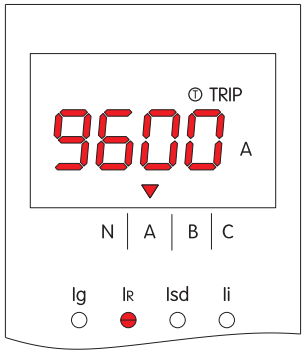

Status of simulating tripping test—simulating time

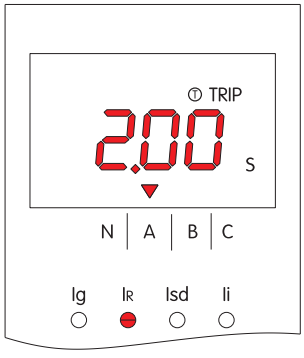

Press "RESET"key at any status to go back to default interface.

«Электро-Профи» - www.ep.ru

7.3 User interface of the multifunctional controller

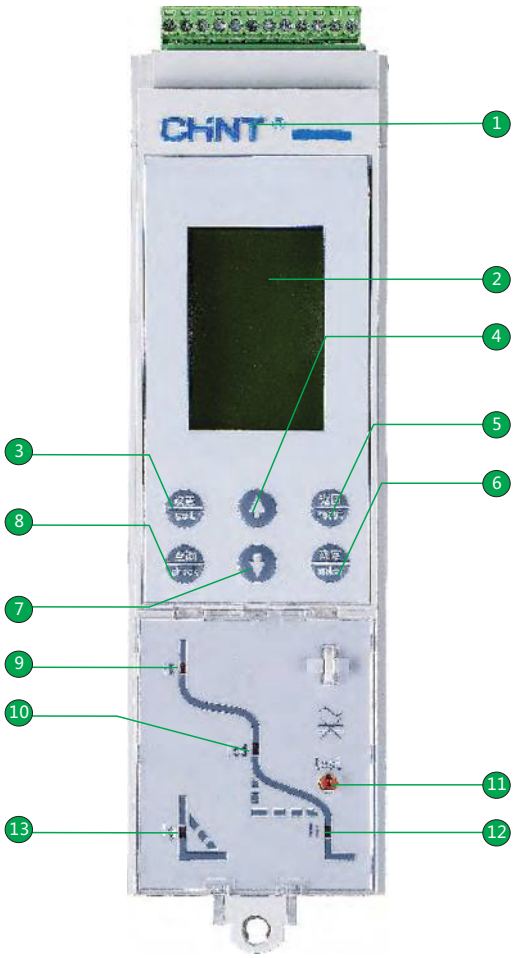

1	Brand	"CHINT" Brand
2	LED window	LCD window capable of showing the current for each phase, various setting parameters, rated current, fault current, tripping time and the like
3	SET key	Switch to the set default menu (left arrow key, when it is necessary to move leftwards or rightwards for the set interface).
4	UP key	Move the box select menu under the current menu to change the position of said box upwards, and perform the setting of the parameter ADD in the parameter setup menu.
5	RETURN key	Exit the current menu and go to the previous menu, or cancel the value of the current setup parameter.
6	ACK key	Go to the next menu of the currently selected select box (go to the set state under the set interface, a nd exit the set state by pressing the key again).
7	DOWN key	Move the box select menu under the current menu to change the position of said box downwards, and perform the setting of the parameter SUBTRACT in the parameter setup menu.
8	INQUIRY key	Switch to the inquiry default menu (right arrow key, when it is necessary to move leftwards or rightwards for the set interface).
9	" IR " limp	Long time-delay overcurrent fault indicator
10	" Isd " limp	Short-circuit short time-delay overcurrent fault indicator
11	" test "	Button for simulating instantaneous tripping test
12	" Ii " limp	Short-circuit instantaneous overcurrent fault indicator
13	" Ig " limp	Single-phase earthing fault indicator

«Электро-Профи» - www.ep.ru

7.4 Default interface and menu structure for the multifunctional controller

The multifunctional controller provides 4 title menus (measurement menu, parameter setup menu, protection parameter setup menu, and history record and maintenance menu) and 1 default menu.

Default interface for the multifunctional controller



7.4.1 Structure of the measurement menu

Primary menu	Secondary menu	Third menu	Fourth menu	Fifth menu
Magnitude of current I	Instantaneous value	Ia Ib Ic In	Ia= 1000A	
			Ib= 1001A	
			Ic= 998A	
			In= 0A	
			Ig= 0A or IΔn=0.00A	
		Maximum	Ia= 1300A	
			Ib= 1400A	
			Ic= 1380A	
			In= 200A	
			Ig= 0A or IΔn=0.00A	
		Unbalance rate	Ia= 3%	
			Ib= 5%	
			Ic= 1%	
	Current thermal capacitance	100%		
	Required value	Real-time value $\bar{Ia}$,$\bar{Ib}$, $\bar{Ic}$,$\bar{In}$	15min	
			$\bar{Ia}$= 1000A	
			$\bar{Ib}$= 1000A	
			$\bar{Ic}$= 998A	
			$\bar{In}$= 0A	
		Maximum	$\bar{Ia}$= 1050A	
			$\bar{Ib}$= 1040A	
			$\bar{Ic}$= 1010A	
			$\bar{In}$= 0A	
Voltage U	Instantaneous value	Uab= 380V		
		Ubc= 380V		
		Uca= 380V		
		Uan= 220V		
		Ubn= 220V		
		Ucn= 220V		
	Mean value	Uav= 380V		
	Unbalance rate	0%		
	Phase sequence	A,B,C		
FrequencyF	50Hz			
Electric energy E	Total electric energy	EP= 200kWh		
		EQ= 10kvarh		
		ES= 200kVAh		
	Input electric energy	EP= 200kWh		
		EQ= 200kvarh		
	Output electric energy	EP= 0kWh		
		EQ= 0kvarh		
	Electric energy reset	Reset		

«Электро-Профи» - www.ep.ru

Primary menu	Secondary menu	Third menu	Fourth menu	Fifth menu
Power P	Instantaneous value	P, Q, S	P= 660kW	
			Q= 0kvar	
			S= 660kVA	
		Power factor	-1.00	
			Perceptual	
			PFa= 1.00	
			PFb= 1.00	
			PFc= 1.00	
		Pa, Qa, Sa	Pa= 220kW	
			Qa= 0kvar	
			Sa= 220kVA	
		Pb, Qb, Sb	Pb= 220kW	
			Qb= 0kvar	
			Sb= 220kVA	
		Pc, Qc, Sc	Pc= 220kW	
			Qc= 0kvar	
			Sc= 220kVA	
	Required value	$\overline{P}$, Q, S	$\overline{P}$= 660kW	
			$\overline{Q}$= 0kvar	
			$\overline{S}$= 660kVA	
		Maximum	$\overline{P}$= 661kW	
			$\overline{Q}$= 2kvar	
			$\overline{S}$= 662kVA	
			Reset(+/-)	
Harmonic H	Waveform	Ia , Ib Ic , In	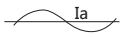 Ia	
			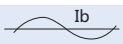 Ib	
			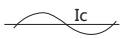 Ic	
			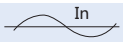 In	
		Uan , Ubn Ucn	 Uan	
			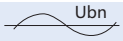 Ubn	
			 Ucn	
	Base form	I(A)	Ia= 1000A	
			Ib= 1000A	
			Ic= 1000A	
			In= 1000A	
		U(V)	Uab= 380V	
			Ubc= 380V	
			Uca= 380V	
			Uan= 220V	
			Ubn= 220V	
			Ucn= 220V	
	THD	I(%)	Ia= 0.0%	
			Ib= 0.0%	
			Ic= 0.0%	
			In= 0.0%	
		U(%)	Uab= 0.0%	
			Ubc= 0.0%	
			Uca= 0.0%	
			Uan= 0.0%	
			Ubn= 0.0%	
			Ucn= 0.0%	
	thd	I(%)	Ia= 0.0%	
			Ib= 0.0%	
			Ic= 0.0%	
			In= 0.0%	

«Электро-Профи» - www.ep.ru

Primary menu	Secondary menu	Third menu	Fourth menu	Fifth menu
	thd	U(%)	Uab= 0.0%	
			Ubc= 0.0%	
			Uca= 0.0%	
			Uan= 0.0%	
			Ubn= 0.0%	
			Ucn= 0.0%	
	FFT	I(3, 5, 7...31)	Ia(3, 5, 7...31)	Ia FFT THD=0.0% 0.0% 3 5 7 9 11...31)
			Ib(3, 5, 7...31)	Ib FFT THD=0.0% 0.0% 3 5 7 9 11...31)
			Ic(3, 5, 7...31)	Ic FFT THD=0.0% 0.0% 3 5 7 9 11...31)
			In(3, 5, 7...31)	In FFT THD=0.0% 0.0% 3 5 7 9 11...31)
		U(3, 5, 7...31)	Uab(3, 5, 7...31)	Uab FFT THD=0.0% 0.0% 3 5 7 9 11...31)
			Ubc(3, 5, 7...31)	Ubc FFT THD=0.0% 0.0% 3 5 7 9 11...31)
			Ubc(3, 5. 7...31)	Ubc FFT THD=0.0% 0.0% 3 5 7 9 11...31)
			Uca(3, 5, 7...31)	Uca FFT THD=0.0% 0.0% 3 5 7 9 11...31)

7.4.2 Structure of the parameter setup menu

Primary menu	Secondary menu	Third menu	Fourth menu	Fifth menu
Setting of the measurement meter	System type	=3Φ4W 4CT		
	Line incoming pattern	=Wire to enter from the upper port		
Test & lock	Test tripping	Test type	=three section protection	
		Test parameter	=I:9999A	
		Test initiation	=start	
	Remote locking	Remote locking	=unlock	
	Parameter locking	Parameter locking	Parameter locking =locking	
		(input) user password =0000	User password (change) =0000	
Communication setting	Address	=3		
	Baud rate	=9.6K		
I/O setting	Function setting	=DO1 =regional interlocking		
	Executive mode	=DO1 =N.O. pulse =360s		
	I/O state	I/O state DO1 DO2 DO3 DI1 1 1 1 1		

7.4.3 Structure of the protection parameter setup menu

Primary menu	Secondary menu	Third menu	Fourth menu	Fifth menu
Current protection	Long time delay	Ir	e.g.: =1000A=100%In	
		Current protection	e.g.: =ON	
		Delay time	e.g.: =C1, Is@6Ir	
		Cooling time	e.g.: =3h	

«Электро-Профи» - www.ep.ru

Primary menu	Secondary menu	Third menu	Fourth menu	Fifth menu
Current protection	Short-time delay	Definite-time limit	Operating current	e.g. =5000A=5.0Ir
				e.g. =0.1s
		Inverse-time limit	Delay time	e.g. =2000A=2.0Ir
				e.g. =C1，0.Is@6Ir
	Instantaneous	Operating current	e.g. =10000A=10.0In	
	Neutral phase protection	Neutral phase protection	e.g. =200%	
	Ground protection	Operating current	e.g. =800A	
		Delay time	e.g. =0.4s	
		Coefficient of earthing	e.g. =6.0	
	Grounding alarm	Starting current	e.g. =600A	
		Starting time	e.g. =0.1s	
		Return current	e.g. =100A	
		Return time	e.g. =0.1s	
	Leakage protection	Operating current	e.g. =8.0A	
		Setup delay time	e.g. =0.75s	
	Electric leakage alarm	Starting current	e.g. =5.0A	
		Starting time	e.g. =0.1s	
		Return current	e.g. =4.0A	
		Return time	e.g. =0.1s	
Load Monitoring	Executive mode	e.g. =I the first method		
	Unloading value 1	e.g. =800A		
	Unloading time 1	e.g. =50%tr		
	Unloading value 2	e.g. =700A		
	Unloading time 2	e.g. =25%tr		
Voltage protection	Under voltage	Executive mode	e.g. =Alarm	
		Startup value	e.g. =200V	
		Starting time	e.g. =0.2s	
		Return value	e.g. =320V	
		Return time	e.g. =60.0s	
	Over voltage	Executive mode	e.g. =Alarm	
		Startup value	e.g. =480V	
		Starting time	e.g. =1s	
		Return value	e.g. =400V	
		Return time	e.g. =60.0s	
	U unbalanced	Executive mode	e.g. =Alarm	
		Startup value	e.g. =10%	
		Starting time	e.g. =1s	
		Return value	e.g. =5%	
		Return time	e.g. =60.0s	

7.4.4 Structure of the history record and maintenance menu

Primary menu	Secondary menu	Third menu	Fourth menu	Fifth menu
Current alarm	e.g. phase sequence alarm, Inverse power alarm, over frequency alarm...			
Number of operations	Total number of times Number of operations	e.g.: 300 e.g.: 219(ACK key, reset)		
Contact wear	Total wear IContact wear	e.g.: 120 e.g.: 20(ACK key, reset)		
Product information	Zhejiang CHINT electrics co., LTD			
Tripping record	e.g.: 1 Under voltage tripping 2004/06/17	Under voltage tripping T=0.20s Umax=0V 11:24:59 6/17		
		F=0.00Hz Uab= 0V Ubc= 0V Uca= 0V		
	.....	.....		

«Электро-Профи» - www.ep.ru

Primary menu	Secondary menu	Third menu	Fourth menu	Fifth menu
Tripping record	e.g. 8 (for) short-circuit definite-time limit 2004/05/30	A phase short-circuit definite-time limit T= 0.4s I= 4300A 15:28:25 5/30		
		Ia= 4300A Ib= 4200A Ic= 4000A In= 150A		
Alarm logging	e.g. 1 DI (for) DI input alarm 2004/07/16	Di input alarm Di1 2004/07/16 20:38:45		
	.....	.....		
	e.ge 8 Under voltage alarm 2004/06/20 Note: Up to 8 times of alarms can be recorded	Under voltage alarm Umax= 0V 2004/06/20 22:29:40		
Position changing record	e.g. 1 (for) local switch on 2002/06/18	local switch on 2002/06/18 9:30:56		
	.....	.....		
	e.g. 8 (for) testing tripping 2002/06/15 Note: Up to 8 times can be recorded	Test tripping 2002/06/15 10:30:20		

Notes: a. The actual menu will very depend on the function selected by the user.
b. The controller starts screensaver automatically 10min later.

7.5 List of the controller functions

Standard configuration

Standard type (M type)	Multifunction type (H type)
1.Quadruple overcurrent protection (for long time-delay, short-circuit short time-delay,instantaneous,earthing); earthing corresponds to vector sum (T type); 2.Parameter setup: fixed value setting position setting function; 3.Current measurement; 4.Test function; 5.Fault recording function; 6.Self-diagnostic function; 7.MCR make/break function; 8.Human-machine interface: 33×22 LED.	1.Quadruple over current protection (for long time-delay,short-circuit short time-delay,instantaneous,earthing); earthing corresponds to vector sum (T type); 2.Parameter setup: fixed value keyboard setting function; 3.Current measurement function; 4.Current unbalance rate measurement function; 5.Two test functions: (1)Instantaneous tripping test simulated on the panel; (2)Triple over current, grounding/leakage and operating time tests simulated by software; 6.Fault recording function: 8 times of failures can be recorded; 7.Self-diagnostic function; 8.MCR make/break function; 9.Communication function: MODBUS protocol; 10.Alarm logging function; 11.Recording number of operations; 12.Contact wear; 13.Position changing record; 14.Human-machine interface: 28×43 LCD; 15.Heat capacity measurement.

«Электро-Профи» - www.ep.ru

Heat capacity measurement

Standard type (M type)	Multifunction type (H type)	
	P Function	H Function
None	1.Voltage measurement; 2.Voltage unbalance measurement; 3.Frequency measurement; 4.Phase sequence measurement; 5.Electric energy measurement; 6.Power measurement; 7.Power factor measurement; 8.Earth-current grounding protection; 9.Leakage protection; 10.Load monitoring function; 11.Quadruple D0 output function; 12.DI input function; 13.Regional interlocking function; 14.Under and over voltage protection;	1.Voltage measurement; 2.Voltage unbalance measurement; 3.Frequency measurement; 4.Phase sequence measurement; 5.Electric energy measurement; 6.Power measurement; 7.Power factor measurement; 8.Earth-current grounding protection; 9.Leakage protection; 10.Load monitoring function; 11.Quadruple DO output function; 12.DI input function; 13.Regional interlocking function; 14.Under and over voltage protection; 15.Measurement of harmonic current; 16.Neutral phase protection

7.6 Characteristic parameters of the standard type intelligent controller

Overcurrent protection characteristics

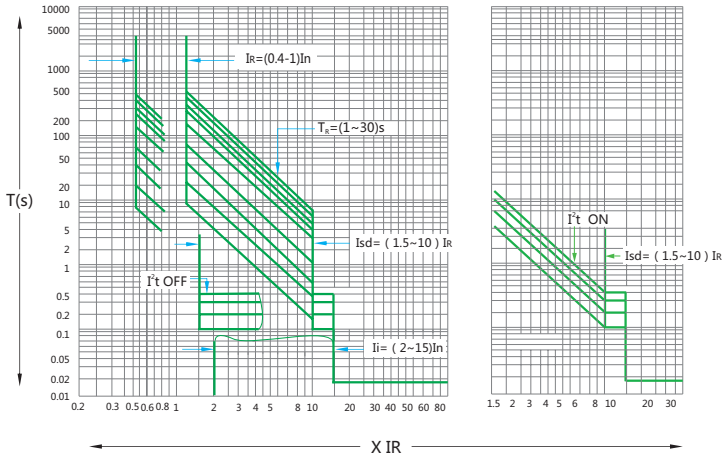

Neutral line (earthing) fault protection characteristic

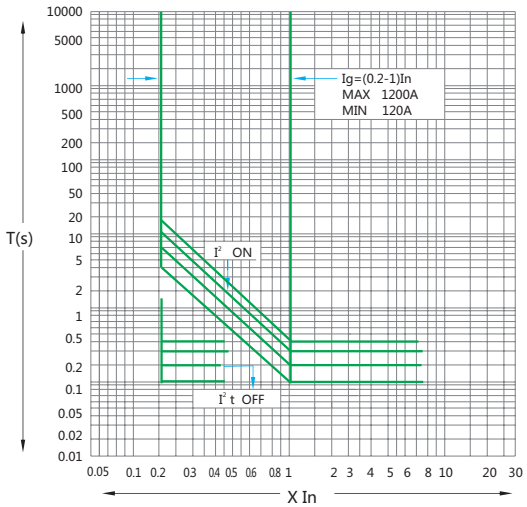

«Электро-Профи» - www.ep.ru

7.6.1 Long time-delay overcurrent protection characteristic

Rated current range [IR]	Error	Current [I]	Operating time [tR(s)]									Time error
(0.4~1)In	±10%	≤1.05I_R	No actuation within 2h									
		>1.30I_R	<1h and then actuate									
		1.5IR	16	32	64	128	192	256	320	384	480	±15%
		2.0IR	9	18	36	72	108	144	180	216	270	
		6.0IR	1	2	4	8	12	16	20	24	30	

Explanation for parameter setting
Current of long time-delay overcurrent protection: I_R=(0.4-0.5-0.6-0.7-0.8-0.9-0.95-0.98-1)×In, optional.

The long-time delay tripping time represents the inverse-time limit characteristic, and nine optional settings are readily available for tripping time in case of 6IR:TR=(1-2-4-8-12-16-20-24-30)s.

For setting, insert a small slotted screwdriver to the knob groove as shown in the right drawing, gently turn it to make the arrow of the knob point at the current and time set as required. As shown in the figure, the over current long time delay protection current setting value I_R=0.6In, and the delay tripping time is 2s (in the condition of 6I_R).

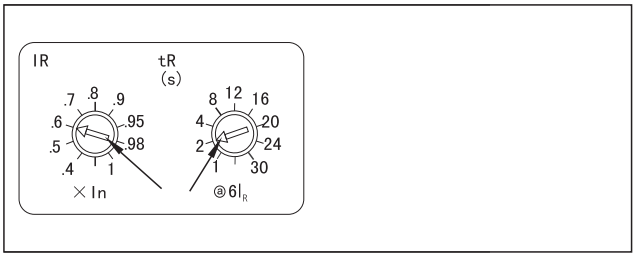

Example 1: If it is known that in condition of I=6I_R,
The tripping time setting value is 2s,
and now the circuit current I=1.5I_R,
then the actual tripping time T_R can be worked out by:
(1.5I_R)2×T_R=(6I_R)2×2. The answer is obtained as T_R=32s

7.6.2 Short-circuit short time-delay overcurrent protection characteristic.

Rated current range [Isd]	Error	Current [I]	Operating time [tsd(s)]	Time error
(1.5~10)I_R +OFF(Power off)	±15%	<0.85Isd	No action	±15%
		>1.15Isd	Time-delay action	
		I^2t OFF	0.1 0.2 0.3 0.4	
		I^2t ON I>10IR	0.1 0.2 0.3 0.4	
		I^2t ON I≤10IR	anti-time-limit delay:$I^2Tsd=(10I_R)^2tsd$	

Explanation for parameter setting
Current of short-circuit short time-delay overcurrent protection : Isd=(1.5-2-2.5-3-4-5-6-8-10)×I_R, optional.

There are nine settings for the short-circuit short time-delay tripping time, wherein 4 settings represent the definite-time limit characteristic (i.e., I^2t OFF), 4 seetings the inverse-time limit characteristic, and 1 setting the function of closing the short- circuit short time-delay (X).

When the tripping time is set as definite-time limit operating characteristic (i.e., the arrow points at the off area), the tripping time can be selected as tsd=(0.1s-0.2s-0.3s-0.4s-x (i.e., the function of closing the short-time delay).

When the tripping time is set as inverse-time limit operating characteristic(i.e., I^2t ON), there are two cases: ①the case of 1 > 1.15Isd and 1 > 10I_R represents the definite-time limit; ② the case of 1 > 1.15Isd and I≤10I_R represents the inverse-time limit characteristic and the actual tripping time is calculated according to the formula $I^2Tsd=(10I_R)^2tsd$, where in I is the line current, Tsd the actual tripping time, and tsd the setting tripping time. The method for setting the current and time for the short-circuit short time-delay overcurrent protection is similar to that for over long time-delay overcurrent protection. As shown in the figure, the current for the short-circuit short time-delay overcurrent protection is 3I_R, and the tripping time is set as tsd=0.2s in the setting position of inverse time limit (I^2t ON).

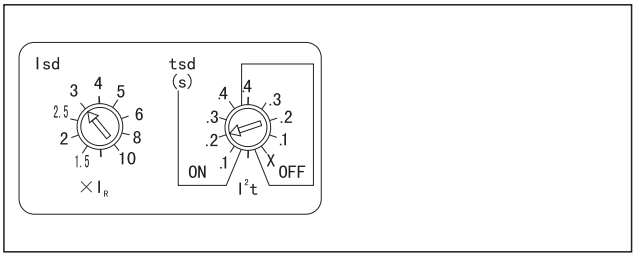

Example 2: If it is known that the short-time delay setting current is Isd=3I_R,
then the tripping time is set as tsd=0.2s
in the setting position of inverse
time limit (I^2t ON). Now the current is 7I_R
in the line current, then the short-time delay tripping time can be worked out by calculation:
1.5Isd=1.15×3I_R=3.45I_R
Then I=7I_R > 1.15Isd
And because I=7I_R < 10I_R
So accotding to I^2×Tsd=(10I)^{2}tsd
$(7I_R)^2$×Tsd=$(10I_R)^2$×0.2
Tsd=0.41s

«Электро-Профи» - www.ep.ru

7.6.3 Short-circuit instantaneous overcurrent protection

Rated current range [Ii]	Error	Line current [I]	Operating Characteristics
(2~15)In +OFF(Power off)	±15%	≤0.85Ii	no-action
		> 1.15Ii	action

Explanation for parameter setting

Current of short-circuit instantaneous over current protection: Ii=[2-3-4-6-8-10-12-15-OFF]×In, optional.
The method for setting the current of short-circuit instantaneous

overcurrent protection is similar to that for long time-delay overcurrent protection setting. As shown in the figure, the instantaneous overcurrent protection current setting value is 8In.



7.6.4 Single-phase earthing fault protection

Rated current range [Ig]	Error	Line current [I]	Operating time [tg(s)]	Time (delay) error
(A~J)In +OFF(Power off)	±10%	< 0.9Ig	no-action	
		> 1.1Ig	time-delay action	±15%
		I^2T OFF	0.1 0.2 0.3 0.4	
		I^2T ON I > J	0.1 0.2 0.3 0.4	
		I^2T ON I≤J	anti-time-limit delay $I^2Tg=(J)^2tg$	

Meaning of Ig

Rated current In	A	B	C	D	E	F	G	H	J	Note
In≤400A	0.3	0.3	0.4	0.5	0.6	0.7	0.8	0.9	1.0	×In
400A<In≤1200A	0.2	0.3	0.4	0.5	0.6	0.7	0.8	0.9	1.0	×In
1200A<In	500A	640A	720A	800A	880A	960A	1040A	1120A	1200A	

Explanation for parameter setting

Current of single-phase earthing protection : Ig=(A-B-C-D-E-F-G-H-J)×In, optional.

There are nine setting positions for the protective delay tripping time, wherein 4 settings represent the definite-time limit characteristic (i.e., I^2t OFF), 4 settings the inverse-time limit characteristic (I^2t ON), and 1 setting the function of closing the single-phase earthing protection (X).

When the tripping time is set as definite-time limit operating characteristic (i.e., the arrow points at the OFF area), the tripping time can be selected as tg=0.1s-0.2s—0.3s-0.4s-x (i.e., the function of closing the single-phase earthing protection).

When the tripping time is set as inverse-time limit operating characteristic (i.e., I^2t ON), there are two cases:
① in the case of I > 1.1Ig and I > J, the result of the automatic changeover process is the definite-time limit operating characteristic, tg=0.1s-0.2s-0.3s-0.4s;
② The case of the current meeting the condition of 1.1Ig < I≤J represents the inverse-time limit characteristic and the actual tripping time is calculated according to the formula $I^2Tg=(J)^2tg$.
In the formula, I is the circuit current, Tg is the actual operating time, J is the setting current, and tg is the setting tripping time.The method for setting the parameter is similar to that for long time-delay current protection. As shown in the figure, the single-phase earthing protection current is C×In, and the tripping time setting is tg=0.4s in the setting position of inverse time limit (I^2t ON).

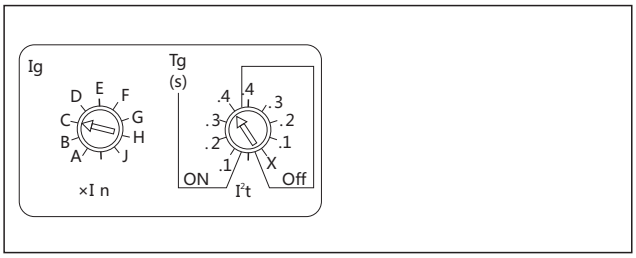

Example 3: If it is known that the single-phase earthing protection setting current for the intelligent controller with rated current of In=800A is as the setting position of C, the tripping time is set as the inverse time limit 0.4s.
Now there is a failure in the circuit, the circuit current I=400A, then the actual tripping time can be worked out; it can be seen from the table that the result is
C=0.4
Ig=C×In=0.4×800=320A
So I=400A > 1.1Ig
According to the formula $I^2T_g=(J)^2t_g$
$(400)^2\times T_g=(1.0\times800)^2\times0.4$
$T_g=1.6s$

Note: For the intelligent controller, the current settings for the long time-delay and the short-circuit short time-delay and the intantaueous overcurrent protection should not come across each other, and the condition of I_R < Isd < Ii must be ensured.

«Электро-Профи» - www.ep.ru

7.7 Explanation for auxiliary functions

a. Explanation for test functions

When onsite adjustment, periodical inspection or overhaul is made with the controller supported by the breaker, breaking several times is necessary by using the test functions of the controller to check the cooperation of the controller and the breaker. With the breaker on, press the test key, and the intelligent controller will trip instantaneously to cut off the breaker.

Note: ① This function can be used only when onsite adjustment or overhaul for the breaker is made, and shall not be used during the normal operation.

② Each time before the controller is switched on, it is necessary to press the reset button in the upper position of the controller panel so that the breaker can be switched on again for operation.

b. Explanation for fault memory

The controller still has the function of fault memory after reset or de-energized to keep a latest historical event for post analysis. Only when there is a new fault again, the original information is cleared with the current latest faulty data saved. For the inquiry method, refer to the above explanation about fault display.

7.8 Explanation for display function

When the rated current is greater than or equal to 400A, the primary current shall not be lower than 0.4In for single phase, and 0.2In for three phases for normal operation of the breaker.

When the rated current is less than 400A, the primary current shall not be lower than 0.8In for single phase, and 0.4In for three phases for normal operation of the breaker.

Note: When the AC220V ST power module is energized, and the voltage falls to AC120V, there will be no display on the controller.

When the AC380V ST power module is energized, and the voltage falls to AC200V, there will be no display on the controller.

a. Current display Error range for current display: ±5%

b. Voltage display Error range for voltage display: ±1.5%

8. Accessories

8.1 Under voltage release

When the under voltage release is not energized, neither power-driven nor manual operation can make the breaker on. For the under voltage release, there are two varieties: instantaneous and time-delay operations.The time for the under voltage time-delay release is Inm=1600A, the time can be selected from but not adjusted in the range of 0 – 7s; Inm=3200A or 6300A, the time can be selected from but not adjusted among 0.5s, 1s, 3s, and 5s. When, within 1/2 delay time, the power voltage returns to 85%Ue or above, the breaker will not get disconnected.

Operating characteristic:

Rated operational voltage Ue(V)	AC230 AC400
Operating voltage(V)	(0.35~0.7)Ue
Reliable switching voltage(V)	(0.85~1.1)Ue
Reliable not-switching voltage(V)	≤0.35Ue
Power dissipation(W)	20VA



Under-voltage release (Inm=1600A)

Under-voltage release (Inm=3200A, 6300A)

8.2 Shunt release

After the shunt release is energized, the breaker is switched off instantaneously to allow remote operation.

Operating characteristic:

Rated control supply voltage Us(V)	AC230 AC400	DC220 DC110
Operating voltage (V)	(0.7~1.1)Us	
Power consumption (W)	200VA	200W
Breaking time	50±10ms	



Shunt release (Inm=1600A)

Shunt release (Inm=3200A, 6300A)

8.3 Closing electromagnet

After the motor-driven energy storage is ended, energizing the closing electromagnet will make the energy storage spring force of the operating mechanism to be released instantaneously to rapidly switch the breaker on.

Operating characteristic:

Rated control supply voltage Us(V)	AC230 AC400	DC220 DC110
Operating voltage (V)	(0.85~1.1)Us	
Power dissipation (W)	200VA	200W
Closing time	50±10ms	



Closing electromagnet (Inm=1600A)

Closing electromagne (Inm=3200A, 6300A)

«Электро-Профи» - www.ep.ru

8.4 Motor-driven energy storage mechanism

The functions of motor-driven energy storage and automatic energy re-storage after the breaker comes on are available to ensure that the breaker can come on immediately after it gets

disconnected.Operating characteristic:

Rated control supply voltage Us(V)	AC230 AC400	DC220 DC110
Operating voltage (V)	(0.85~1.1)Us	
Power dissipation (W)	75/150VA	75/150W
Energy storage time	<4s	
Frequency of operation	At most 3 times in a minute	



(Inm=1600A)



(Inm=3200A, 6300A)

8.5 Auxiliary contact

Standard type:4 switch contact

Special type:5 switch contact

6 switch contact (Only for I_{nm}=1600A, and not available for DC)

3 N.O. and 3 N.C.

4 N.O. and 4 N.C.(I_{nm}=3200A and 6300A provided)



(Inm=1600A)



(Inm=3200A, 6300A)

Technical parameters:

Rated voltage(V)		Rated thermal current Ith(A)	Rated control capacity
AC	230 / 400	6	300VA
DC	220	6	60W



8.6 Phases barrier

Phases barrier is installed between the phases of the line bank to improve the insulating ability between the phases of the breaker.

8.7 Key lock

The OFF pushbutton of the breaker can be locked in the position of depress, and at this time, the breaker cannot be closed for operation; When the user selects the option, the factory provides locks and keys; One breaker is provided with one lock and one key for the lock; Two breakers are two provided with locks and one key for the locks; Three breakers are provided with three same locks and two same keys for the locks.

Note:

For the air circuit breaker with key lock, when the key has to be pulled out, it is necessary to first press the OFF key, turn the key anticlockwise, and then pull out the key.



8.8 Button locking device

It is used to lock the button for opening and closing the breaker with the padlock used for such a purpose. (Padlock is provided by users themselves)



8.9 Doorcase

They are installed on the door of the distribution cabinet room to seal it with a protection level of up to IP40.



8.10 "Disconnected" pation locking device for the draw-out.

For the "separation" position of the open frame (draw-out) circuit breaker, a lock rod can be pulled out to lock the matter, and the breaker locked will be unable to be turned towards the TEST or CONNECTION position. Padlocks have to be provided by users themselves.

8.11 Three-position locking device for the draw-out.

After the breaker body is locked automatically in any working position, it is necessary to turn the key to unlock the matter so that the break body can be moved to the next working position by turning the handle. (this function available for 3200 to 6300).

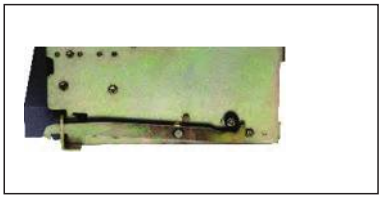

8.12 Door interlock

Door interlock for the breaker status

When the breaker is closed, the cabinet door must not be opened; when the breaker is switched off, the cabinet door is allowed to be opened. Door interlock for the breaker position When the breaker is in the position of connection and test, the cabinet door must not be opened; when the breaker is the separation position, the cabinet door is allowed to be opened.

8.13 Mechanical interlock

It can realize the interlock of two horizontal or vertical-installed,three poles or four poles,drawout or fixed breakers.



«Электро-Профи» - www.ep.ru

9. Installation

9.1 Following items to be checked before installation Check the label plate on the breaker panel to see if it is conform to the specifications of the ordered goods.

a.Rated current
b.Under voltage release voltage and delay time
c.Shunt release voltage
d.Closing electromagnet voltage
e.Motor voltage

9.2 Before installation, operation, maintenance and inspection, you shall read this manual, and consult the manufacturer for questions, if any.

9.3 Preparations before installation Before the breaker is installed, check the insulation resistance of the breaker by using a 1000V megohmmeter according to regulations; when the surrounding media temperature is 25℃±5℃ and the relative humidity 50% - 70%, the insulation resistance shall not be less than 20 megohm.

The place with the insulation resistance to be tested includes: the place between various phases and between various phases and the frame when the breaker is closed; the place between in- and out- lines of various phases.

Listed below are the problems which users may encounter during installation, adjustment, and operation of the breaker, and the possible reasons and elimination methods.

9.4 Installation of the fixed type breaker
Place the breaker into the distribution cabinet, and fasten it by using 4 pieces of M6(In=1600A) or M10(In=3200A or more) bolts and washers. The breaker shall be installed stably with no additional mechanical stress to avoid damage of the breaker or bad contact of the main bus bar.

9.5 Installation of the open frame (draw-out) circuit breaker Take the breaker body out of the draw-out socket, and install the socket in the distribution cabinet, and fasten it by using 4 pieces of M6(In=1600A) or M10(In=3200A or more) bolts and washers; the breaker shall be installed stably with no additional mechanical stress to avoid damage of the breaker or bad contact of the main bus bar. After the work is completed, mount the body into the draw-out socket.

9.6 The specifications of the wiring copper bars for the primary circuit of the breaker shall meet the copper bar specifications used under the conditions of conventional heating in IEC/EN 60947-2.

9.7 The breaker shall be grounded substantially.

10. Common faults and troubleshooting

No.	Technical problems	Possible causes	
1	Breaker tripping (fault indicator on)	Overload fault tripping (long time delay indicator on)	Diagnosis and trouble shooting 1 Check the breaking current and operating time on the intelligent controller 2 Analyze the operation of the load and power network 3 Promptly find and shoot the trouble if overload is confirmed 4 For lack of match between the actual running current and the long time delay operating current, please modify the long time-delay operating current setting for a proper match and protection according to the actual running current 5 Press the reset button to close the breaker again
		Short-circuit fault tripping (short time-delay or instantaneous overcurrent indicator on)	1 Check the breaking current and operating time on the intelligent controlle 2 Promptly find and shoot the trouble if overload is confirmed 3 Check the setting value of the intelligentcontroller 4 Check to see whether the breaker is in good condition, and determine whether it can be closed for operation 5 Press the reset button to close the breaker again
		Earthing fault tripping (earthing fault indicator on)	1 Check the breaking current and operating time on the intelligent controller 2 Promptly find and shoot the trouble if it is confirmed that there is a earthing fault 3 If no earthing fault is detected, please determine whether the earthing fault current setting is proper, and can be well matched with the actual protection; if not, the setting shall be modified 4 Press the reset button to close the breaker again
2	Breaker fails to close	Under voltage release Tripping	1 Check to see if the power voltage is lower than 70%Ue 2 Check the under voltage release and control unit for fault
		Mechanical interlock action	Check the working condition of two breakers equipped with mechanical interlock.
		Under voltage release No attracting	1 Whether the under voltage release has been energized 2 Whether the power voltage is lower than 85%Ue 3 Whether the under voltage release or control unit malfunctions, if so, the release shall be replaced.
		Reset button fails to reset	Press the reset button to close the breaker again.
		Open frame (draw-out) circuit breaker fails to be put to the righ t position by rocking	Check the contract status of the secondary circuit, and shoot the trouble, if any
		Open frame (draw-out) circuit breaker Bad contact for the secondary circuit	1 Check the motor control power supply and see if it is well providing power, and the voltage must be ⩾85%Us 2 Check the status of the motor energy storage mechanism.
		Breaker fails to pre-store energy	Put the open frame (draw-out) circuit breaker to the right position by rocking (with it locked in the connected position)
		Closing electromagnet trouble	1 Check the power voltage of the closing electromagnet, and it must be higher than or equal to 85%Us 2 If there is any trouble in the closing electromagnet to enable the attracting, it shall be replaced.

«Электро-Профи» - www.ep.ru

No.	Technical problems	Possible causes	
3	Breaker trips after closed	Tripping immediately Delay tripping	1 There may be short circuit current when the matter is switched on, and in this case you shall find and shoot the trouble 2 Check to see if there is any overload current in the circuit, find and shoot the trouble 3 Check the setting value of the intelligent controller for reasonability, and a re-setting process is necessary if not reasonable 4 Press the reset button to close the breaker again
4	Breaker fails to open	The breaker fails to break in power-driven modeThe breaker fails tobreak in manual mode	1 Check the shunt release circuit for reliable connection and the shunt release for trouble, and the release shall be replaced if the fault is confirmed 2 Check the operating mechanism for mechanical fault.
5	Breaker fails to store energy	Energy failed to be stored in power-driven mode	1 Check the motor-driven energy storage mechanism control power voltage, and the voltage shall be ≥85%Us; check the status of the circuit connection 2 Check the motor
		Energy failed to be stored in manual mode	Check the operating mechanism for mechanical fault
6	Breaker fails to be pulled out when the open frame (draw-out) circuit breaker is in the SEPARATION position	Rock rod fails to be pulled out Breaker fails to completely reach the SEPERATION position	Pull out the rock rod Put the breaker completely to the “disconnected” position by rocking
7	Open frame (draw-out) circuit breaker fails to be put to the CONNECTION position by rocking	The "drawer” has seized up for foreign matters fall in it; damage in the mechanism for putting in by rocking or the gear thereof; Position locking device fails to be unlocked	Check it for foreign matters and for condition of the rack and gear Turn the key on the “drawer” to unlock the matter
8	No display on the intellectual controller screen	Intelligent controller fails to be energized by power supply: Improper input voltage for the auxiliary power supplyImproper secondary output voltage for the transmitter Unreliable connection between the secondary output terminal of the transmitter and the controller	1 Check to see if the intelligent controller power supply is well be connected and works well 2 Cut off the intellectual controller control power supply, and then connect the power supply; If the fault is still present, there may be some troubles in the controller which has to be replaced

«Электро-Профи» - www.ep.ru

11. Ordering specification

User		Order amount	Order date	Tel
Type and size	☐NA8G-1600	☐NA8G-3200	☐NA8G-4000	☐NA8G-6300
Rated current (In)A	☐400 ☐630 ☐800 ☐1000 ☐1250 ☐1600	☐1600 ☐2000 ☐2500 ☐3200	☐ 2500 ☐ 3200 ☐ 4000	☐4000 ☐5000 ☐6300(don' t have 4P)
Installation mode	☐draw-out type ☐Fixed type (no such products for over 4000A)			
Connection mode	☐Horizontal connection ☐Vertical connection ☐Front connection ☐mixed connection (connection mode to be noted)			
Number of poles	☐3P ☐4P			
Intelligent controller	Setting of the protection parameter	Factory' s setting values: I_R=1In, t_r=2s@6I_R; I_{sd}=8I_R, inverse-time protection,t_{sd}= 0.4s; I_i=12I_n;OFF(If on, when I_n > 1200A I_g=800A; when I_n≤1200A I_g=0.5I_n) If the user has some requirements different from the defaulting, please write the numerical values on the line below		
		Long-time delay protectionIR	Operating current setting_____In (0.4,0.5,0.6,0.7,0.8,0.9,0.95,0.98,1) Operating time setting_____s (1,2,4,8,12,16,20,24,30)	
		Short-circuit short-time delay protectionIsd	Operating current setting_____IR (1.5,2,2.5,3,4,5,6,8,10) Operating time setting ☐inverse time_____s (0.1,0.2,0.3,0.4,OFF)	
		Short-circuit instantaneous protectionIi	Operating current setting_____In (2,3,4,6,8,10,12,15,OFF)	
		Ground protectionIg	Operating current setting_____In Operating time setting ☐inverse time_____s ☐Definite-time limit_____s	
	Selecting the type	☐Standard type ☐Multifunctional type		
	Power input	☐AC400V ☐AC230V ☐DC220V ☐DC110V ☐DC24V		
	Basic function	Three-section protection against over current Neutral line or grounding fault protection Voltage measurement Test function Fault inquiry/memory function Self-diagnostic function		
	Optional function (this function to be added as required by the user, and to be matched with the controller type)	☐Over voltage protection ☐Under voltage protection ☐Over frequency protection ☐Under frequency protection ☐Voltage unbalance measurement ☐Phase sequence protection ☐Voltage measurement ☐Frequency measurement ☐Measurement of harmonic current ☐Power factor measurement ☐Power measurement ☐Phase sequence detection ☐Voltage unbalance rate measurement ☐Electric energy measurement ☐Contact equivalent ☐MCR make/break function ☐Load monitoring function ☐Signal contact output function ☐Communication function ☐ZSI regional interlocking protection		
	Note: when the product is a multifunctional controller as arranged by the user, the communication function and the like are the basic function configuration			
Accessories for standard configuration	Under voltage release	☐Instantaneous ☐Time delay_____s (1-2-3-4-5-6-7s provided for frame 1600, optional but not adjustable; 0.5-1-3-5s for frame 3200 and 6300l, optional but not adjustable) ☐AC400V ☐AC230V		
	Shunt release	☐AC400V ☐AC230V ☐DC220V ☐DC110V		
	Closing electromagnet	☐AC400V ☐AC230V ☐DC220V ☐DC110V		
	Energy storage motor	☐AC400V ☐AC230V ☐DC220V ☐DC110V		
	Auxiliary contact	☐4 switch contact ☐6 swith contact ☐3 N.O. and 3 N.O. (only for frame 1600 provided) ☐4 N.O. and 4 N.O. (only for frame 3200,4000,6300 provided) ☐6 N.O. and 6 N.0(only for frame 3200,4000,6300 provided)		
Accessories for optional configuration	OFF locking device	☐One breaker is provided with one lock and one key ☐Two breakers is provided with two same locks and one key ☐Three breakers is provided with three same locks and two keys		
	Mechanical interlock	Mechanical interlock ☐Steel cable interlock ☐Connecting-rod interlock		
	☐Button locking device ☐Phases barrier	☐Three-position locking device for the draw-out socket	☐Door interlock	

Note: Extra costs are needed for the optional functions, optional accessories and the like for the breaker.







«Электро-Профи» - www.ep.ru



Summary

5 basic frame sizes

For your various requirements, the Air Circuit Breaker NA1 includes 5 basic frame sizes as followed.

NA1-1000X
200A to 1000A



NA1-2000X,NA1-2000XN，NA1-2000XH
630A to 2000A



NA1-3200X,NA1-3200XN,NA1-4000X
2000A to 4000A



NA1-6300X,NA1-6300XN
4000A to 6300A



«Электро-Профи» - www.ep.ru

1. General

1.1 Application scope

NA1 series air circuit breaker is suitable for the circuit of AC 50Hz/60Hz with rated service voltage 400V, 690V and rated service current up to 6300A. It is mainly used to distribute electric energy and protect circuits and electric equipment against over-load, under-voltage, short-circuit and single-phase earthing fault.

With intelligentized and selective protection functions, the breaker can improve the reliability of power supply, and avoid unnecessary power failure. The breaker is applicable for power stations, factories, mines (for 690V) and modern high-buildings, especially for the distribution system of intelligentized building.

1.2 Standard: IEC/EN 60947-2.

2. Operating conditions

2.1 Temperature condition:

-5℃~40℃; the average value within 24h shall not exceed +35℃ (special situation excluded);

2.2 Altitude:≤2000m;

2.3 Pollution grade: Grade 3;

2.4 Air conditions:

At mounting site, relative humidity not exceed 50% at the max temperature of +40℃, higher relative humidity is allowable under lower temperature, RH could be 90% at +20℃, special measures should be taken to occurrence of dews;

2.5 Note: Without the intelligent controller, the breaker functions as a switch-disconnector.

2.6 Type designation

NA1 - □□-□□/□-□-□-□-□

Voltage of secondary circuit
AC220V, AC380V,
AC230V, AC400V
DC220V, DC110V

Wiring of main circuit:
H:Horizontal wiring of main circuit
V:Vertical wiring of main circuit

Mode of installation:
F:Fixed type
D:Draweout type

Mode of operation:
M:Manual
P: Power-driven

No. of poles:
3:3-pole
4:4-pole

Intelligent controller:
M: Standard type
3M: Multifunctional type
3H: Communication type

Rated current:

Frame size rated current	Rated current
1000A	200A
	400A
	630A
	800A
	1000A
2000A	630A
	800A
	1000A
	1250A
	1600A
	2000A
3200A	2000A
	2500A
	3200A
4000A	4000A
6300A	4000A
	5000A
	6300A

Breaking capacity:
X
XN
XH

Frame size rated current:
1000,2000,3200,4000,6300

Design sequence number

ACB

Company code

«Электро-Профи» - www.ep.ru

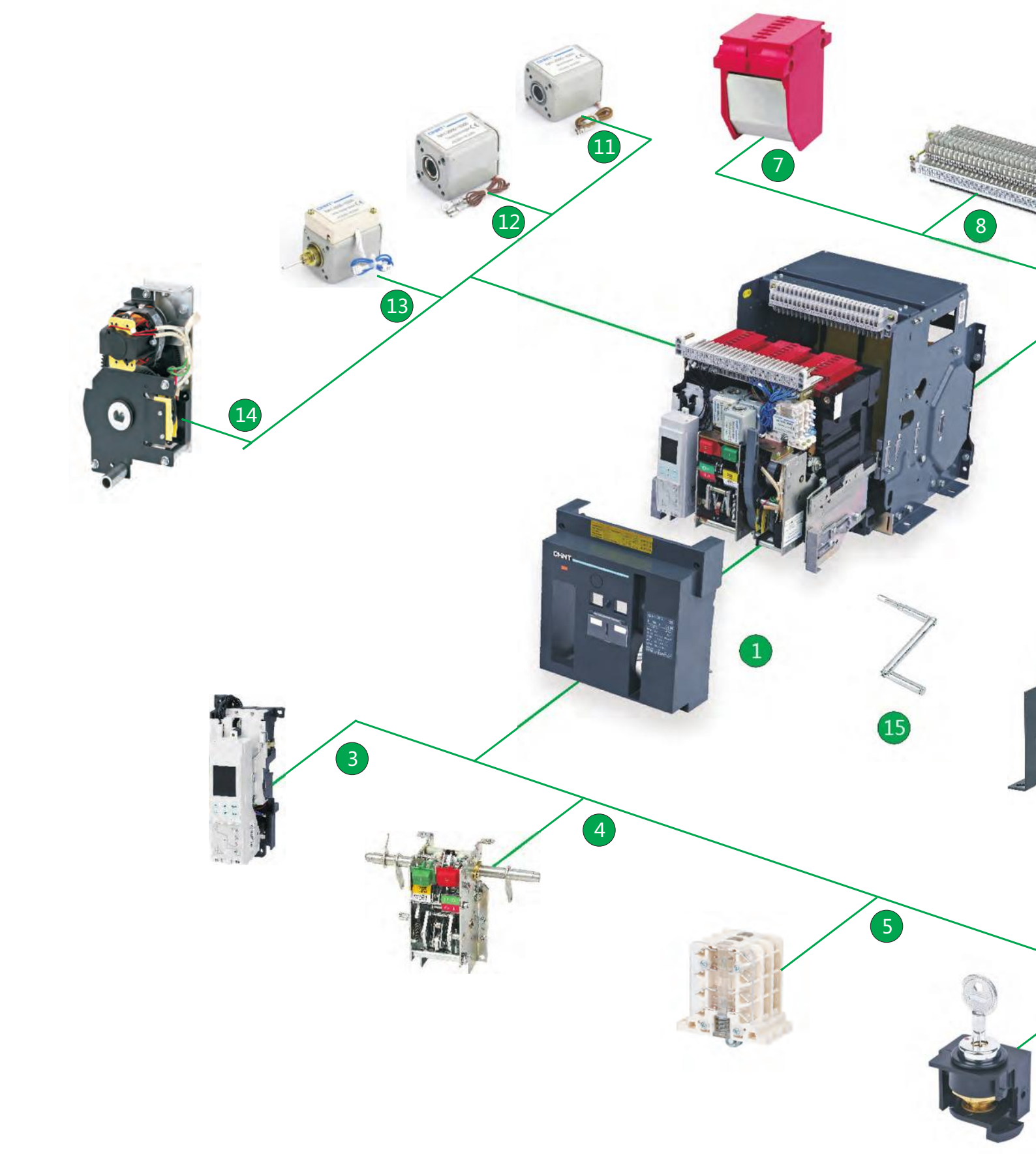
11
12
13
14
7
8
1
15
3
4
5

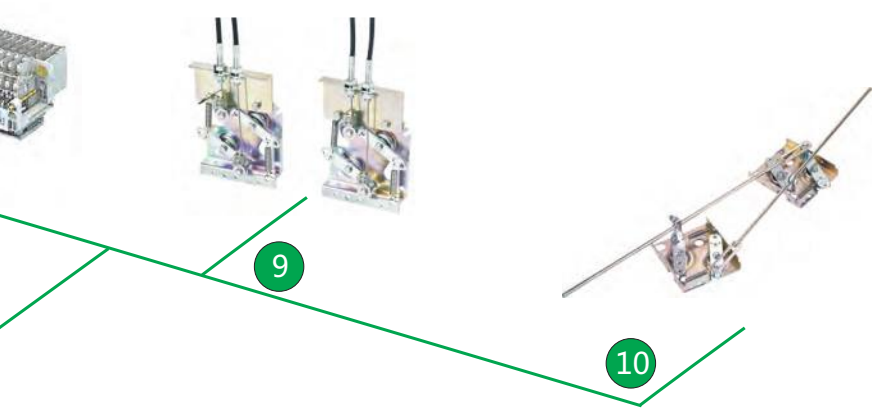

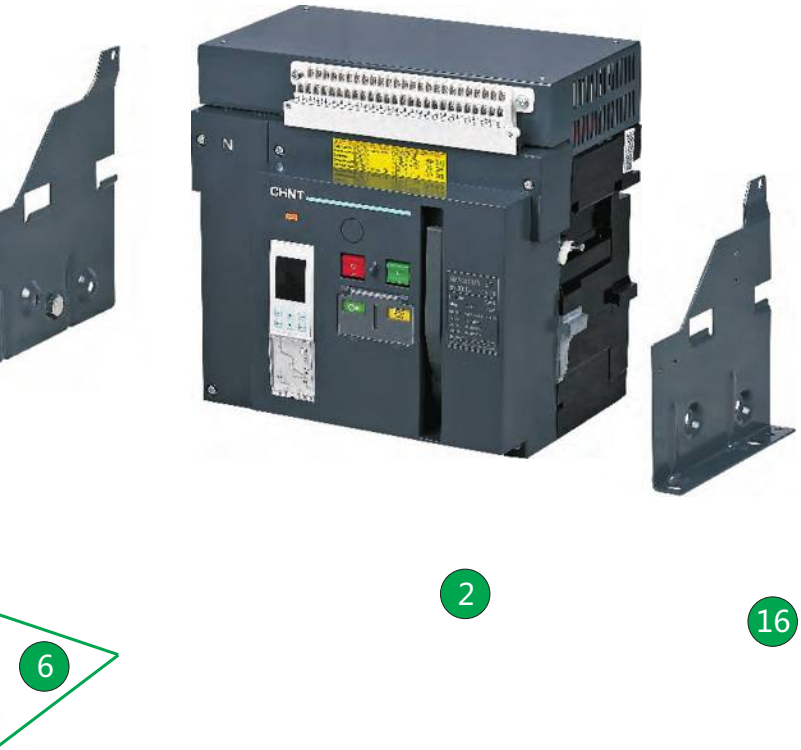

NA1 Air Circuit Breaker

1. Drawout type
2. Fixed type
3. Intelligent controller
4. Operating mechanism
5. Auxiliary contact
6. Locking-device
7. Arcing chamber
8. Secondary wiring terminal
9. Wire-cable mechanical interlock
10. Connecting-rod type mechanical interlock
11. Shunt release
12. Closing electromagnet
13. Under-voltage release
14. Motor-driven energy-storage mechanism
15. Rotary handle
16. Mounting plate

C

«Электро-Профи» - www.ep.ru

3. Structure



Drawer seat + Body = Drawout type breaker/switch-disconnector



Mounting plate → Mounting plate for the fixed type breaker/switch-disconnector ← Mounting plate

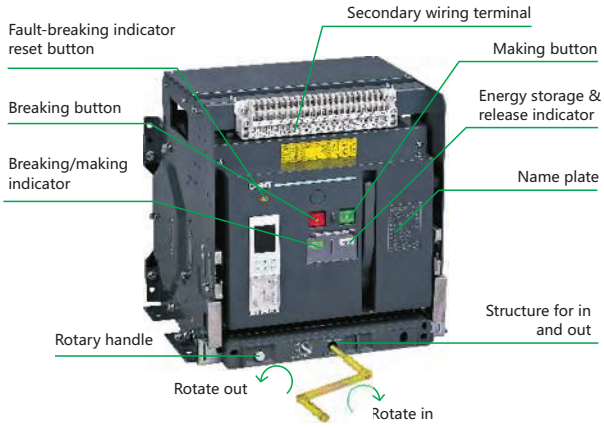

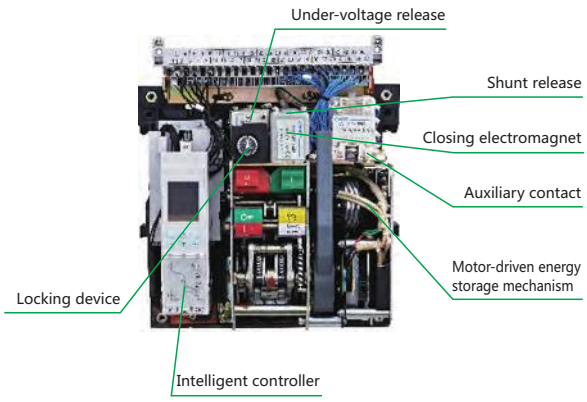

«Электро-Профи» - www.ep.ru

4. Main technical parameter

Type			NA1-1000X				
							
Rated ultimate short circuit breaking capacity (Icu)		AC400V	42				
		AC690V	25				
Rated service short circuit breaking capacity (Ics)		AC400V	30				
		AC690V	20				
Rated short-time withstand current (Icw.1s)		AC400V	30				
		AC690V	20				
Rated current In (A)			200	400	630	800	1000
Number of poles			3, 4				
Rated voltage Ue (V)			AC 400, AC 690				
Rated insulation voltage Ui (V)			800				
Rated current of N-pole In (A)			100%In				
Fixed disconnection time (ms)			23~32				
Intelligent controller	Standard type (M)		●	●	●	●	●
	Communication type (H)		●	●	●	●	●
Operation performance	Electric life		AC 400V:6500, AC 690V:3000				
	Mechanical life		Non-maintenance 15,000				
			Maintenance 30,000				
Connection pattern			Horizontal, Vertical				
Motor operational standard configuration weight (kg)		Drawout 3P/4P	38/55				
		Fixed 3P/4P	22/26.5				

«Электро-Профи» - www.ep.ru

Type		NA1-2000X			NA1-2000XN		NA1-2000XH
							
Rated ultimate short circuit breaking capacity (Icu)	AC400V	80			50		65
	AC415V	50			40		50
	AC690V	50			40		50
Rated service short circuit breaking capacity (Ics)	AC400V	65			50		65
	AC415V	40			40		40
	AC690V	40			40		40
Rated short-time withstand (Icw.1s)	AC400V	50			50		50
	AC415V	40			40		40
	AC690V	40			40		40
Rated short-time withstand (Icw.3s)	AC400V	42			42		42
	AC415V	42			42		42
Rated current In (A)		630	800	1000	1250	1600	2000
Number of poles		3, 4					
Rated voltage Ue (V)		AC 400, AC 415, AC 690					
Rated insulation voltage Ui (V)		1000					
Rated current of N-pole In (A)		100%In					
Fixed disconnection time (ms)		23~32					
Intelligent controller	Standard type (M)	●	●	●	●	●	●
	Communication type (H)	●	●	●	●	●	●
Operation performance	Electric life	AC400:6500 AC690V:3000					
	Mechanical life	Non-maintenance 15,000					
		Maintenance 30,000					
Connection pattern		Horizontal, Vertical					
Motor operational standard configuration weight (kg)	Drawout 3P/4P	67.5 / 80			70 / 84		79 / 90.5
	Fixed 3P/4P	42 / 52			44 / 52		45 / 54

«Электро-Профи» - www.ep.ru

C

Type			NA1-3200X		NA1-3200XN	NA1-4000X
						
Rated ultimate short circuit breaking capacity (Icu)		AC400V	80		65	80
		AC415V	65		50	—
		AC690V	65		50	65
Rated service short circuit breaking capacity (Ics)		AC400V	65		65	65
		AC415V	65		50	—
		AC690V	65		50	65
Rated short-time withstand (Icw.1s)		AC400V	65		65	65
		AC415V	50		50	—
		AC690V	50		50	50
Rated short-time withstand (Icw.3s)		AC400V	45		45	—
		AC415V	45		45	—
Rated current I_n (A)			2000	2500	3200	4000
Number of poles			3, 4			3
Rated voltage Ue (V)			AC 400, AC 415, AC 690			
Rated insulation voltage Ui (V)			1000			
Rated current of N-pole I_n (A)			100%In			
Fixed disconnection time (ms)			23~32			
Intelligent controller	Standard type (M)		●	●	●	●
	Communication type (H)		●	●	●	●
Operation performance	Electric life		AC400V:3000 AC690V:2000			AC400V:1500 AC690V:1000
	Mechanical life		Non-maintenance 10,000			
			Maintenance 20,000			
Connection pattern			Horizontal, Vertical			
Motor operational standard configuration weight (kg)	Drawout 3P/4P		90.5 / 116	90.5 / 116	103 / 130	132
	Fixed 3P/4P		55 / 68	55 / 68	56.5 / 71	72 / -

«Электро-Профи» - www.ep.ru

Type			NA1-6300X		NA1-6300XN
					
Rated ultimate short circuit breaking capacity (Icu)		AC400V	120		100
		AC415V	85		75
		AC690V	85		75
Rated service short circuit breaking capacity (Ics)		AC400V	100		100
		AC415V	75		75
		AC690V	75		75
Rated short-time withstand (Icw.1s)		AC400V	100		100
		AC415V	75		75
		AC690V	75		75
Rated short-time withstand (Icw.3s)		AC400V	50		50
		AC415V	50		50
rated current In (A)			4000	5000	6300
Number of poles			3, 4		3
Rated voltage Ue (V)			AC 400, AC 415, AC 690		
Rated insulation voltage Ui (V)			1000		
Rated current of N-pole In (A)			50%In		—
Fixed disconnection time (ms)			23~32		
Intelligent controller	Standard type (M)		●	●	●
	Communication type (H)		●	●	●
Operation performance	Electric life		AC400V:1500 AC690V:1000		
	Mechanical life		Non-maintenance 5000		
			Maintenance 10,000		
Connection pattern			Horizontal, Vertical		
Motor operational standard configuration weight (kg)	Drawout 3P/4P		210 / 233	210 / 233	233 / -
	Fixed 3P/4P		- / -	- / -	- / -

Standard configuration: M type intelligent controller; Under-voltage release; Shunt release; Motor-driven energy-storage mechanism; Closeing electromagnet.

«Электро-Профи» - www.ep.ru

5. Dimensions and connection

NA1-1000X Drawout-type

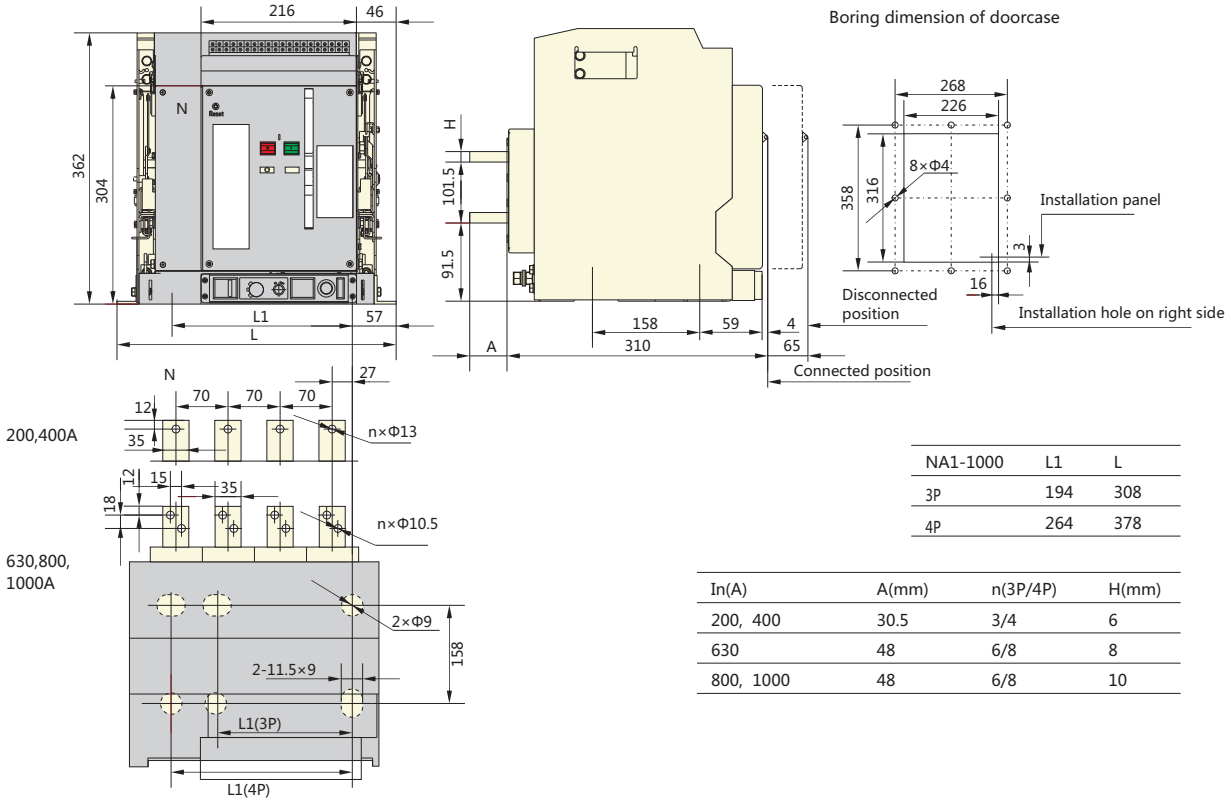

NA1-1000	L1	L
3P	194	308
4P	264	378

In(A)	A(mm)	n(3P/4P)	H(mm)
200, 400	30.5	3/4	6
630	48	6/8	8
800, 1000	48	6/8	10

NA1-1000X Fixed-type

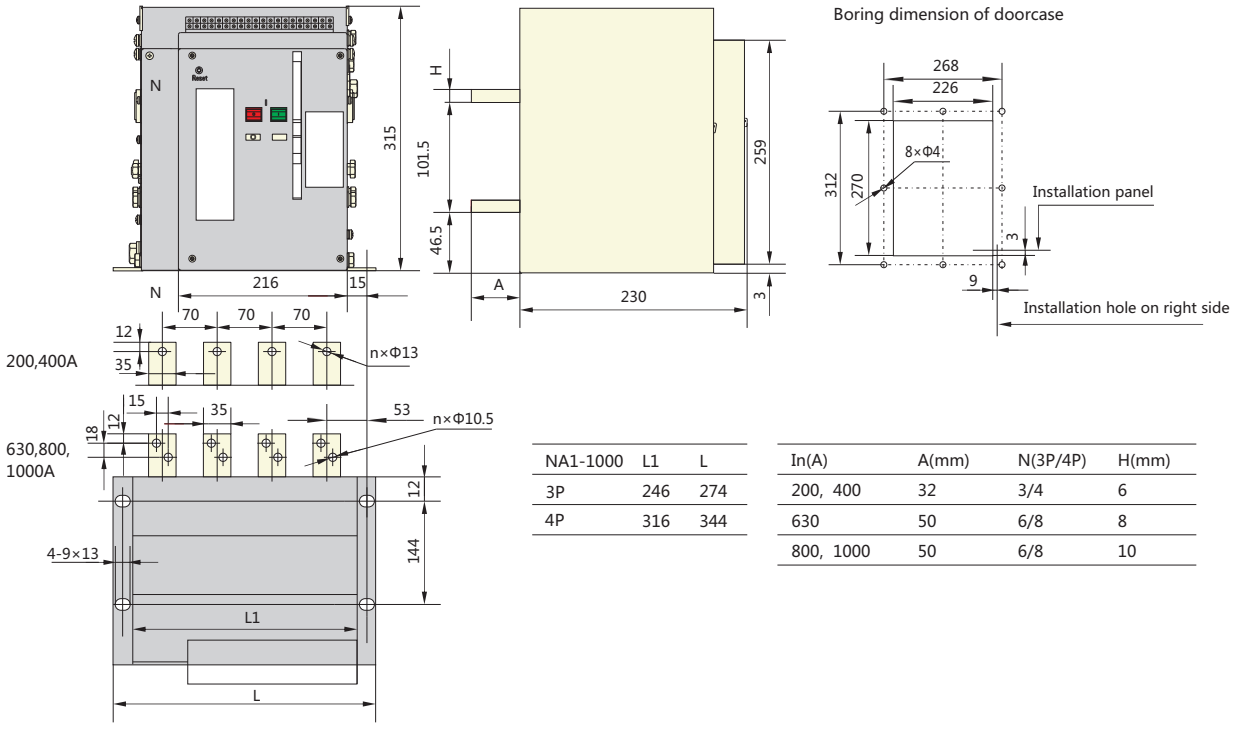

NA1-1000	L1	L
3P	246	274
4P	316	344

In(A)	A(mm)	N(3P/4P)	H(mm)
200, 400	32	3/4	6
630	50	6/8	8
800, 1000	50	6/8	10

«Электро-Профи» - www.ep.ru

NA1-2000X/NA1-2000XN/NA1-2000XH Drawout-type

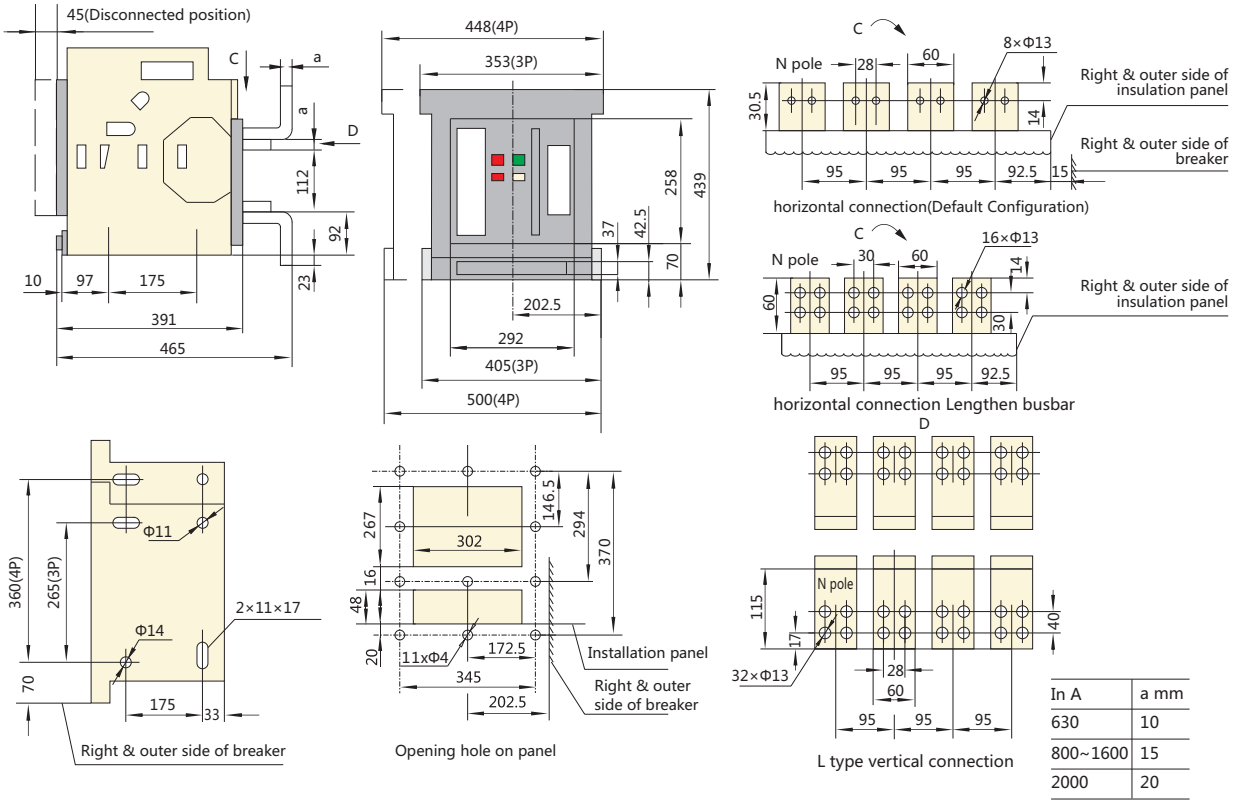

In A	a mm
630	10
800~1600	15
2000	20

NA1-2000X/NA1-2000XN/NA1-2000XH Drawout-type,vertical,rear connection

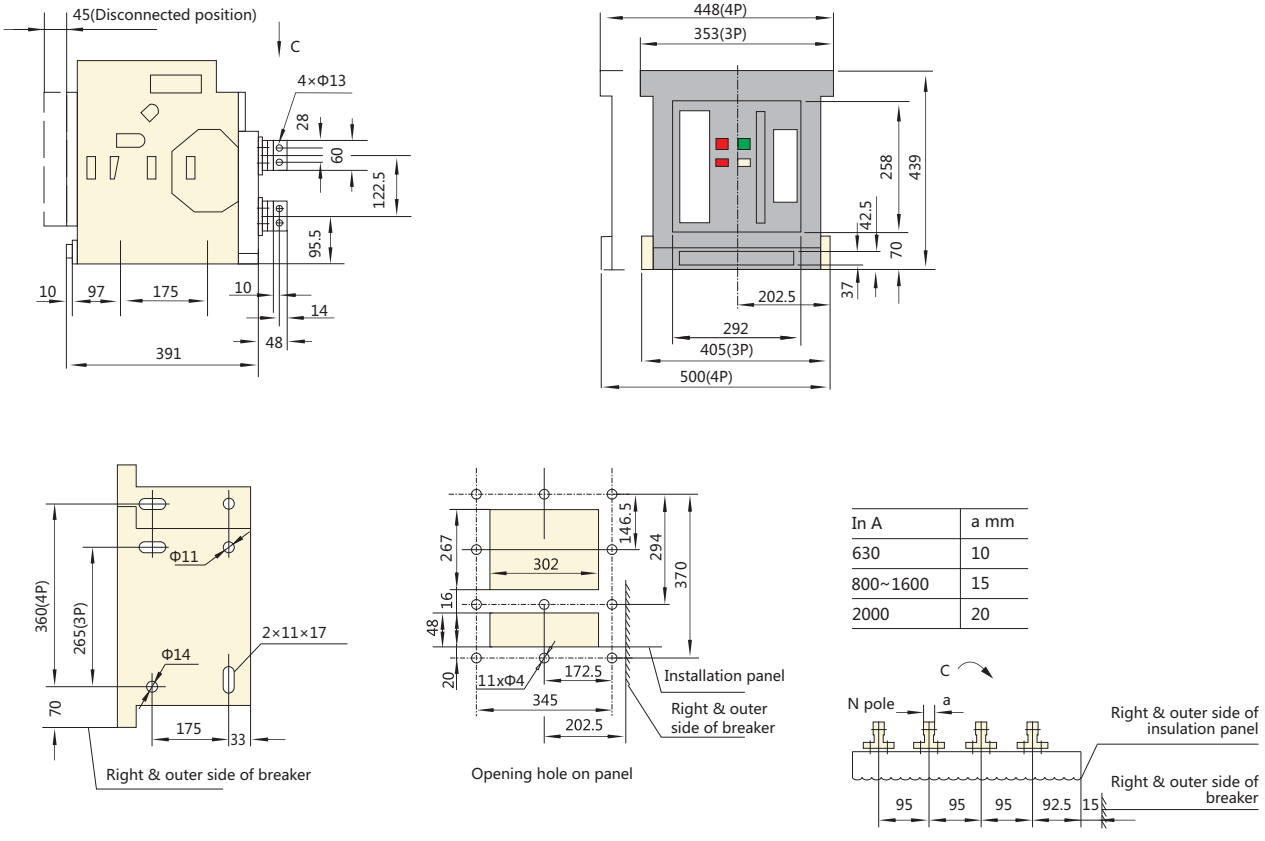

In A	a mm
630	10
800~1600	15
2000	20

«Электро-Профи» - www.ep.ru

NA1-2000X/NA1-2000XN/NA1-2000XH Drawout-type, horizontal, rear connection

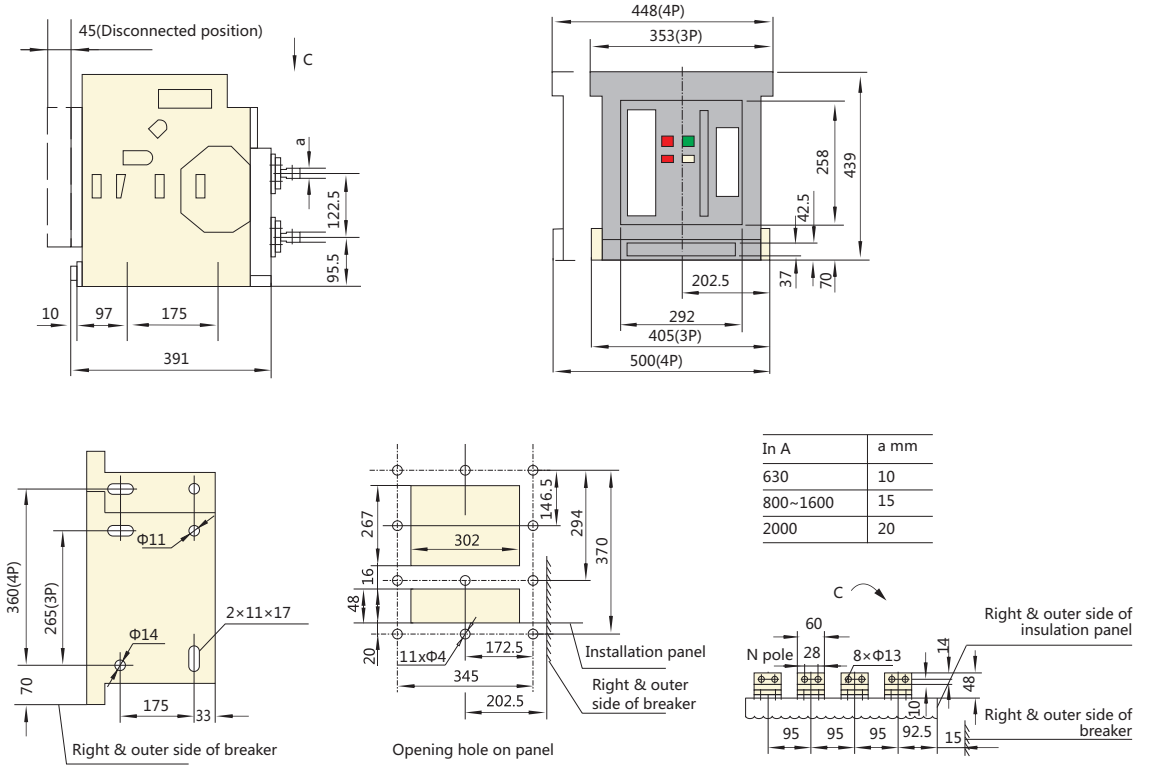

In A	a mm
630	10
800~1600	15
2000	20

NA1-2000X/NA1-2000XN/NA1-2000XH Fixed-type

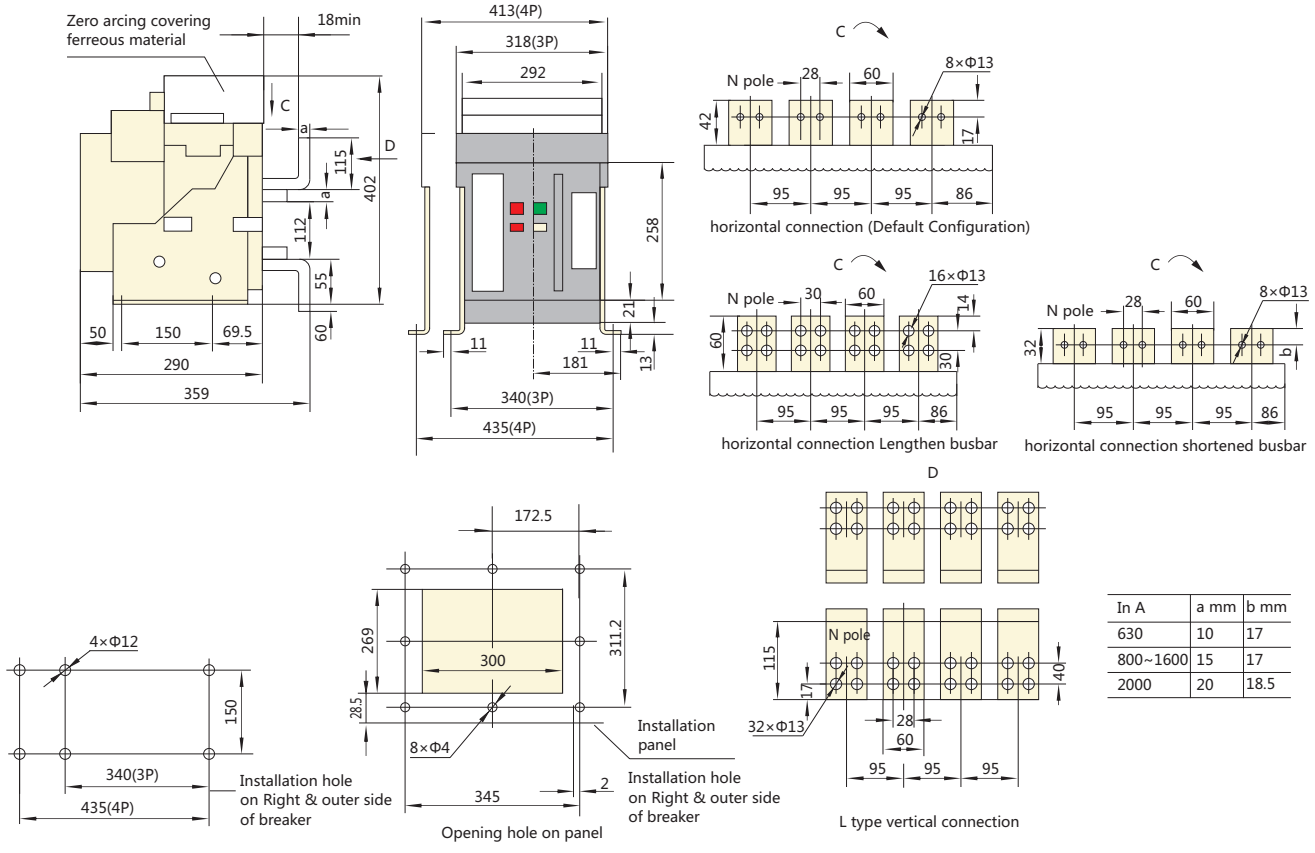

In A	a mm	b mm
630	10	17
800~1600	15	17
2000	20	18.5

«Электро-Профи» - www.ep.ru

NA1-3200X/NA1-3200XN Drawout-type

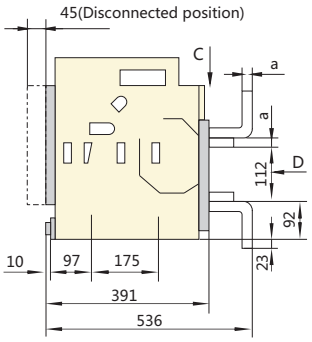

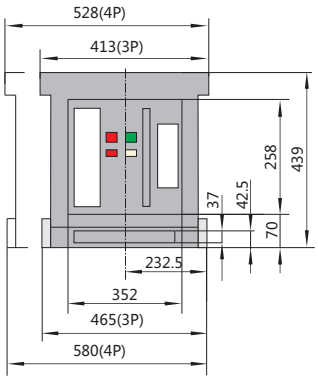

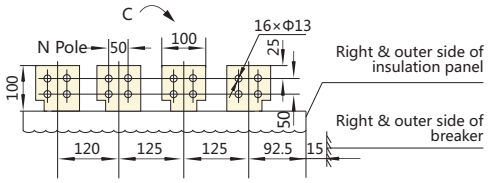

horizontal connection(Default Configuration)

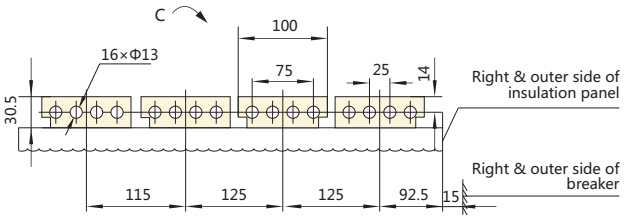

horizontal connection shorten busbar

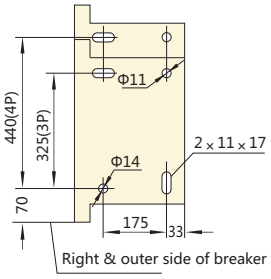

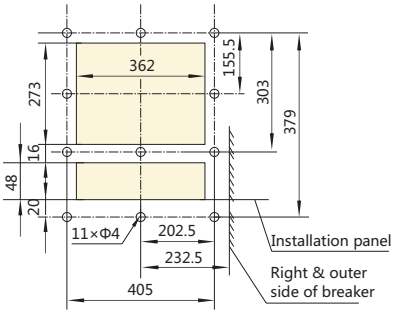

Opening hole on panel

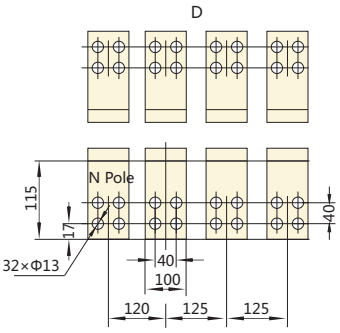

L type vertical connection

In A	a mm
2000~2500	20
3200	30

NA1-3200X/NA1-3200XN Drawout-type, vertical, rear connection

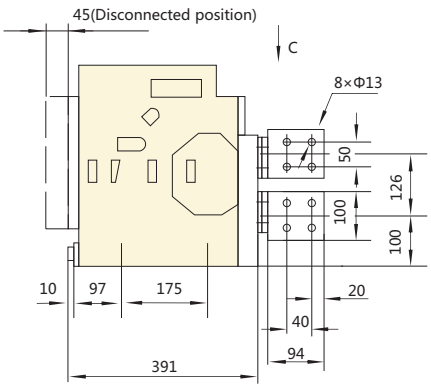

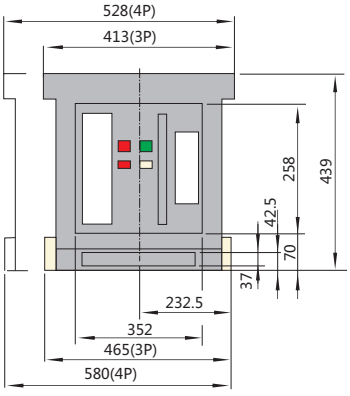

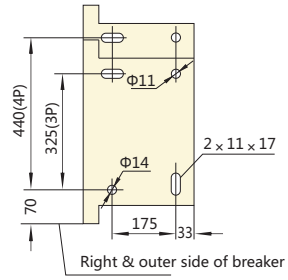

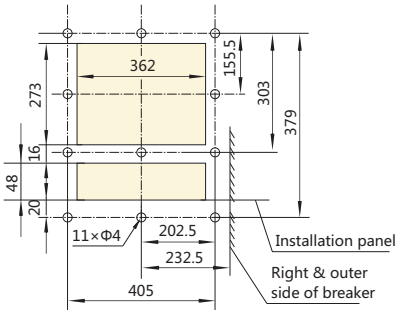

Opening hole on panel

In A	a mm
2000~2500	20
3200	30

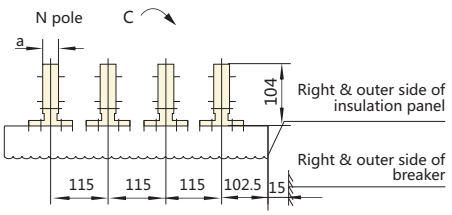

«Электро-Профи» - www.ep.ru

NA1-3200X/NA1-3200XN Drawout-type, horizontal, rear connection

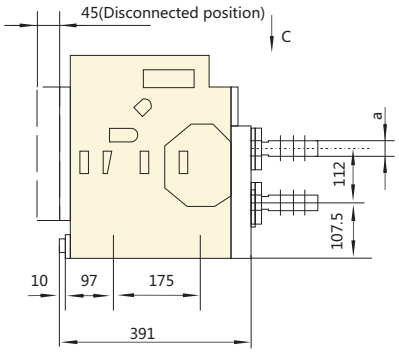

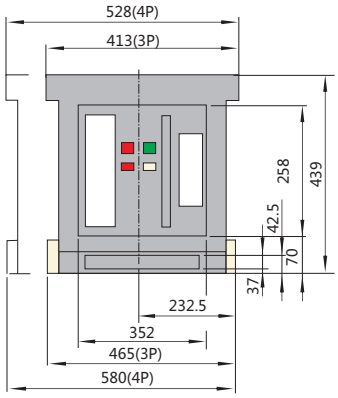

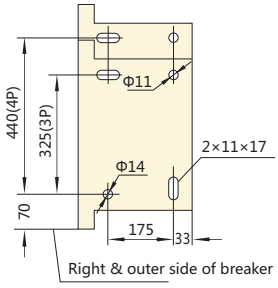

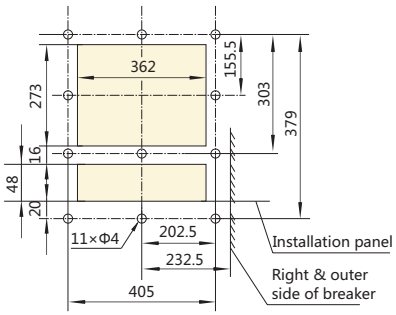

Opening hole on panel

In A	a mm
2000~2500	20
3200	30

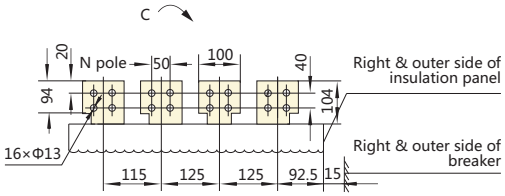

NA1-3200X/NA1-3200XN Fixed-type

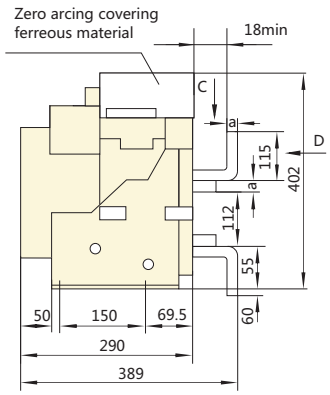

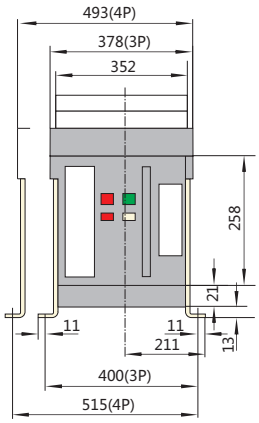

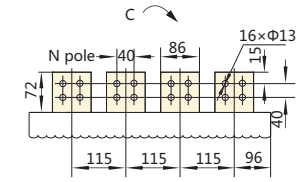

horizontal connection(Default Configuration)

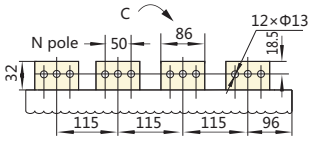

horizontal connection shorten busbar

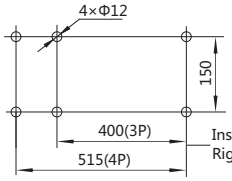

Installation hole on Right & outer side of breaker

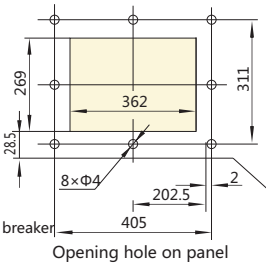

Opening hole on panel

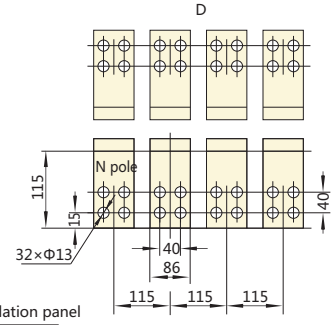

L type vertical connection

In A	a mm
2000~2500	20
3200	30

«Электро-Профи» - www.ep.ru

NA1-4000X Fixed-type (3P)

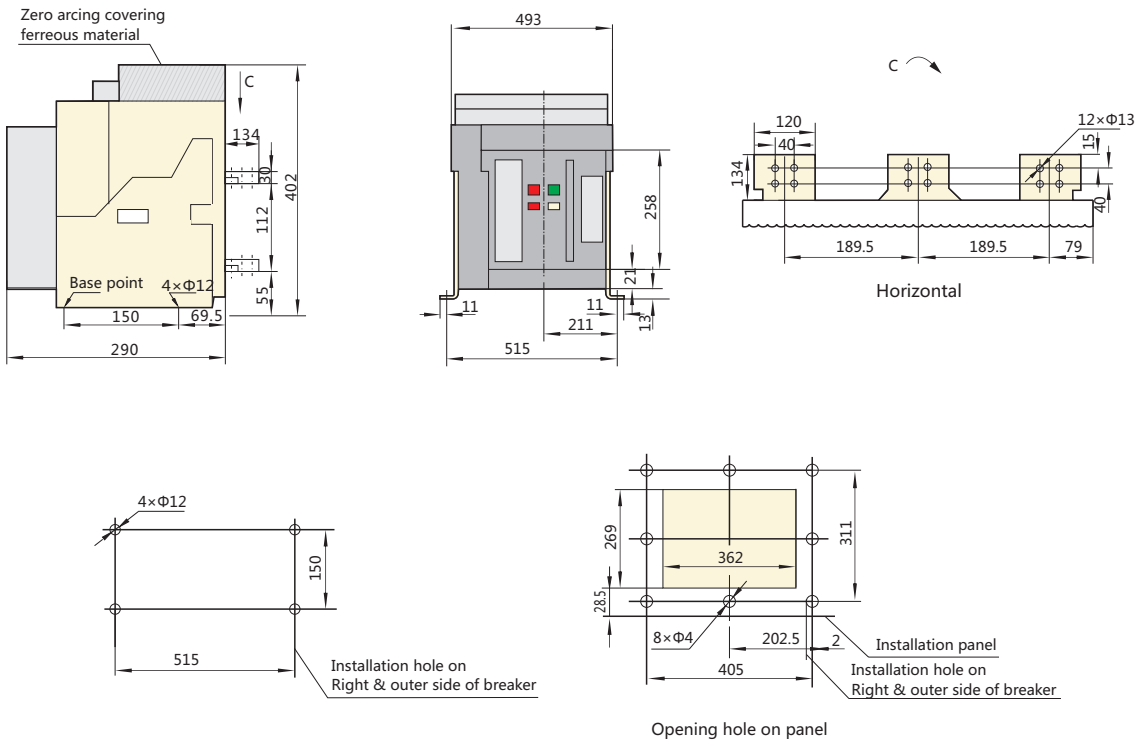

NA1-4000X Drawout-type (3P)

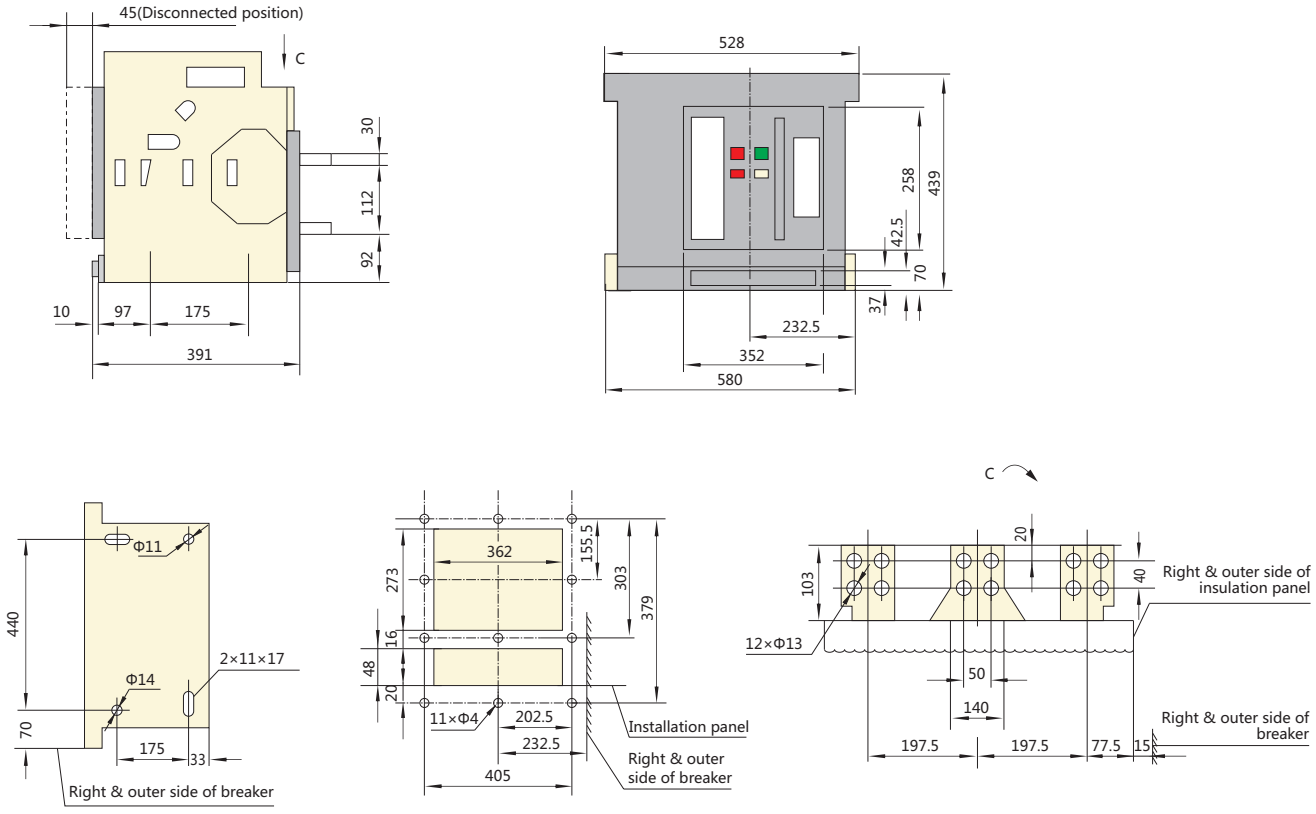

«Электро-Профи» - www.ep.ru

NA1-6300X/NA1-6300XN (In=4000A,5000A) Drawout-type

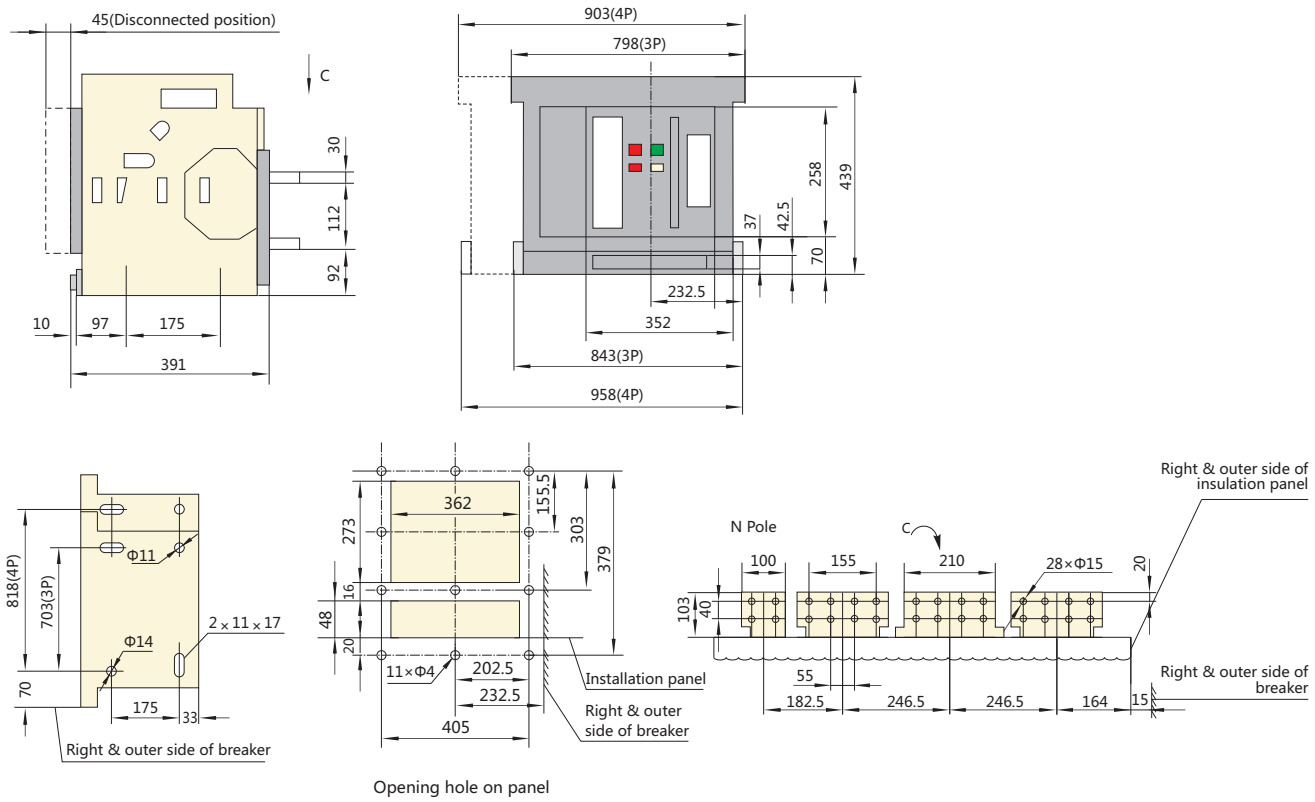

«Электро-Профи» - www.ep.ru

NA1-6300X/NA1-6300XN (In=6300A) Drawout-type (3P)

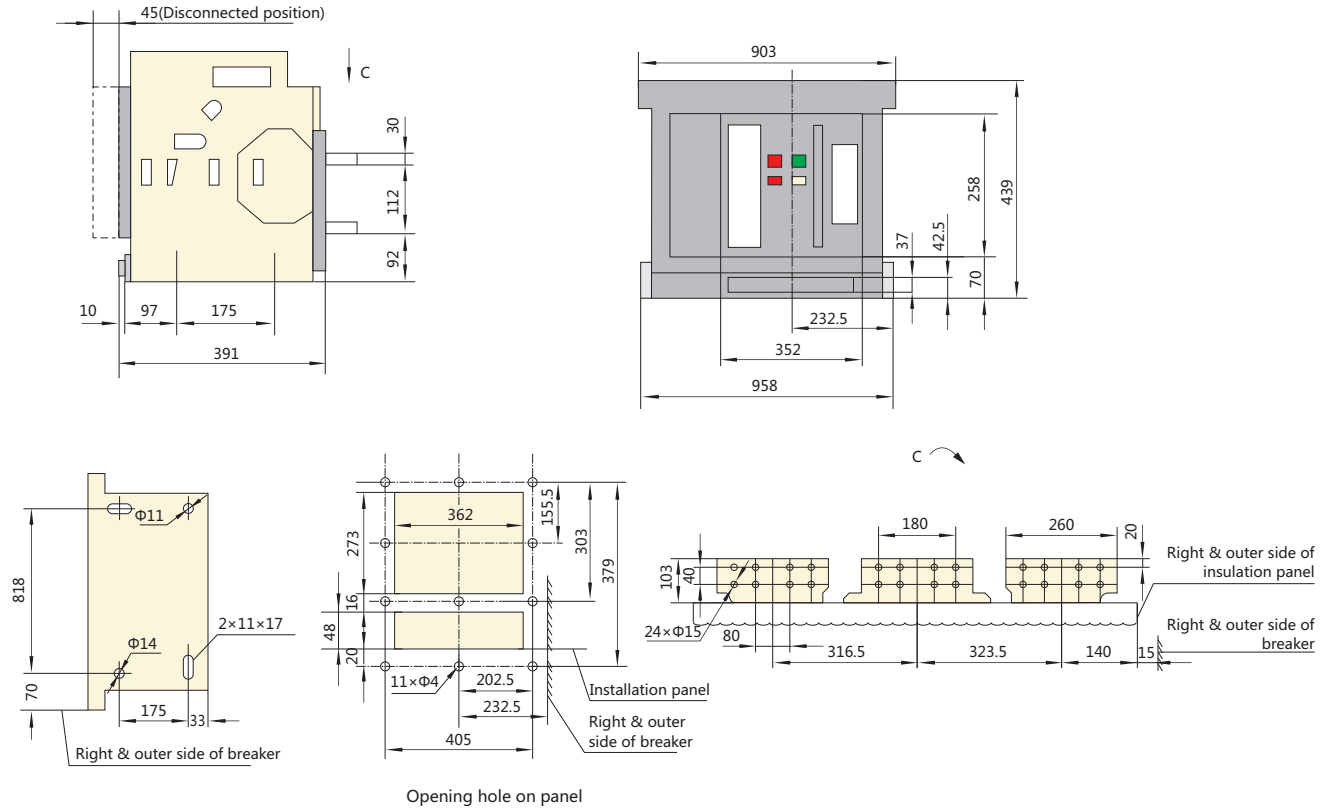

Opening hole on panel

«Электро-Профи» - www.ep.ru

6. Secondary circuit wiring

6.1 NA1-1000X

Standard type, type (M/3M)

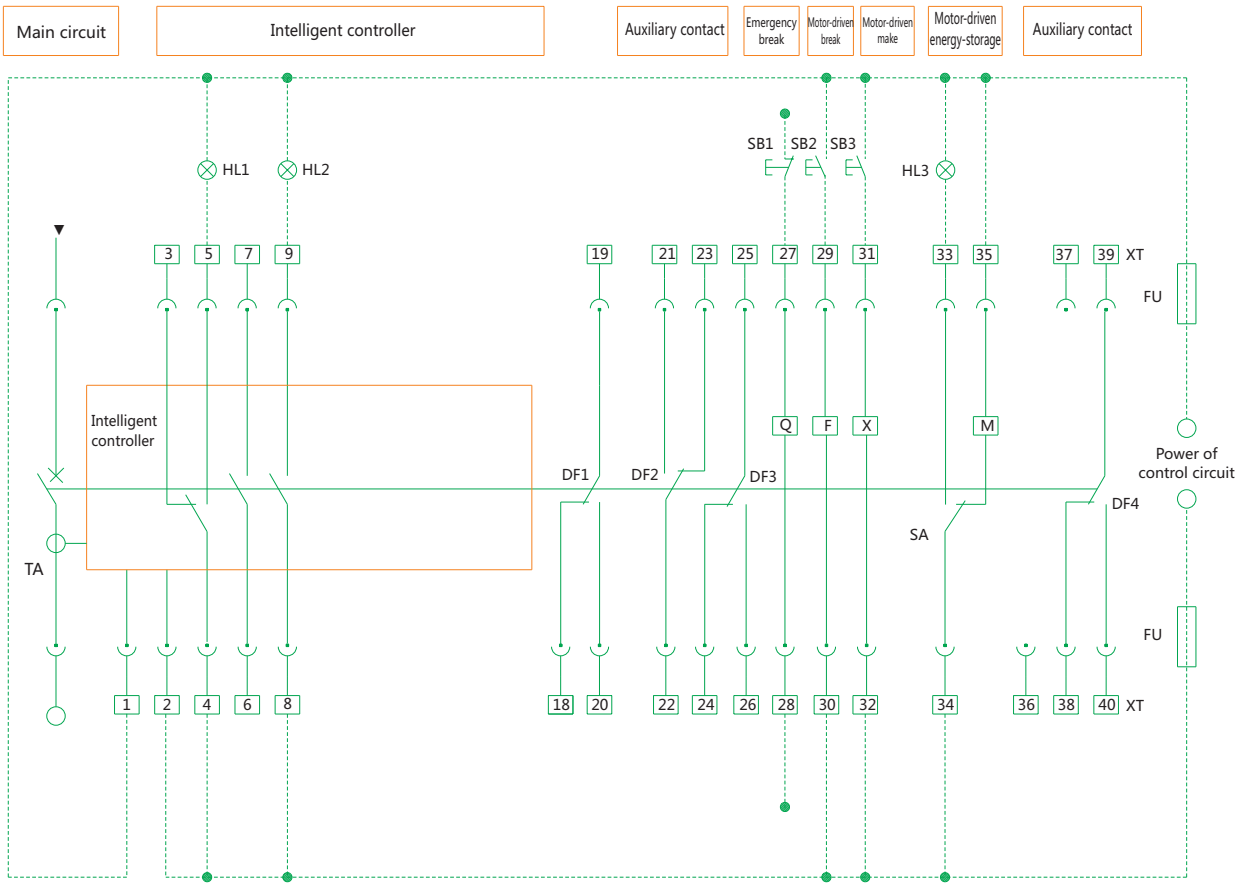

HL1: Failure indicator
HL2: Close indicator
HL3: Energy storage indicator
SB1: Under-voltage button
SB2: Shunt button
SB3: Close button
Q: Under-voltage release
F: Shunt release
X: Close electromagnet
M: Energy storage motor
DF1-DF4: Auxiliary switch
1#, 2#: Auxiliary power input
3#,4#,5#: Fault trip contact output(4# common terminal, contact capacity AC230V,5A
6#,7#: To be connected with current transformer(selective)
8#,9#: Making indicator (capacity AC400V,1A)
27#,28#: Under-voltage release(Connected to the main circuit)
29#,30#: Shunt release
31#,32#: Closing electromagnet
33#,34#,35#: Energy storage motor
18#~26#, 38#~40#: Auxiliary contact
(auxiliary contact capacity: AC230V,5A)

Note:
Dashed is to be connected by users.

«Электро-Профи» - www.ep.ru

Communication type, type (H/3H)

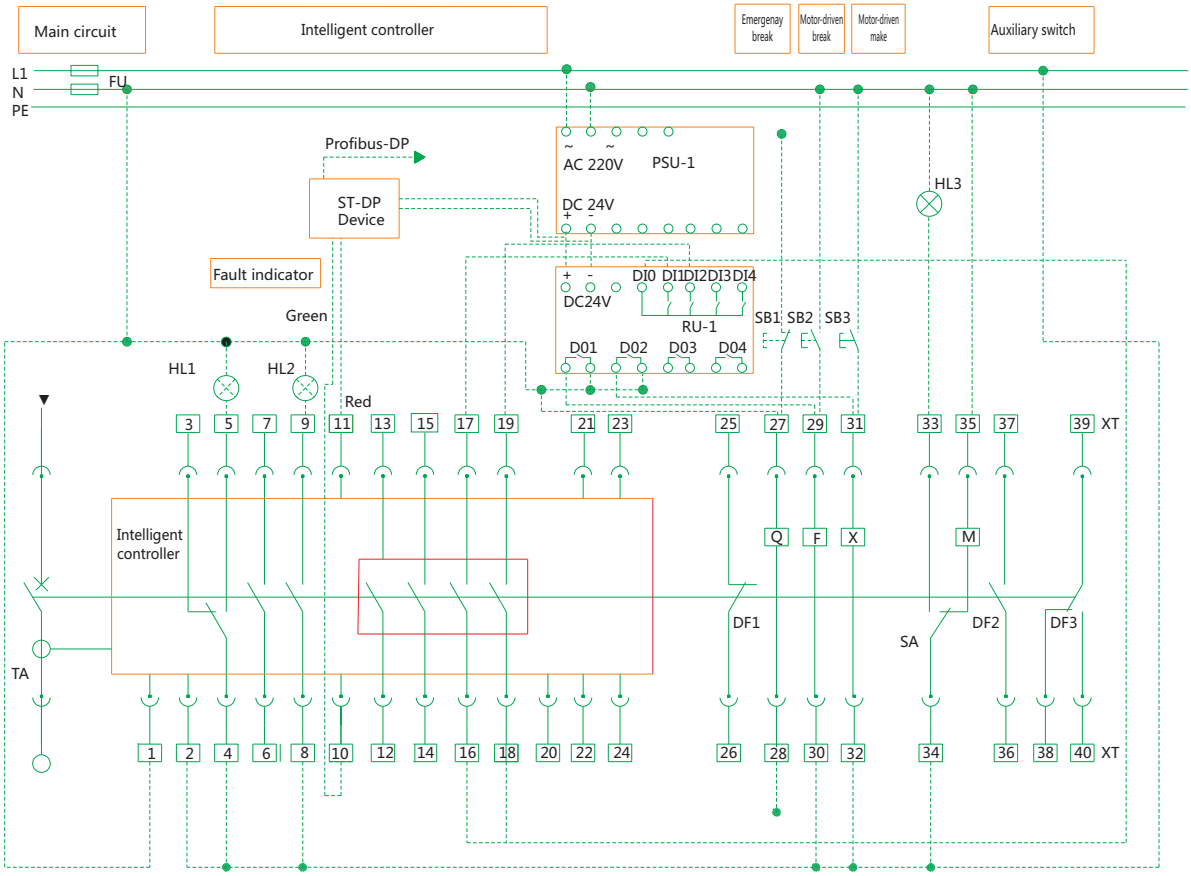

HL1: Failure indicator
HL2: Close indicator
HL3: Energy storage indicator
SB1: Under-voltage button
SB2: Shunt button
SB3: Close button
Q: Under-voltage release
F: Shunt release
X: Close electromagnet
M: Energy storage motor
DF1-DF3: Auxiliary switch
1#, 2#: Auxiliary power input(DC24)
3#,4#,5#: Fault trip contact output(4# common terminal, contact capacity AC230V,5A
6#, 7#: To be connected with current transformer(N/O auxiliary contact, capacity AC400V, 1A,when no current transformer)

Note:
Dashed is to be connected by users.

8#,9#: Making indicator(capacity AC400V,1A)
10#, 11#: communication output
12#, 13#: Signal alarm of load 1 output
14#, 15#: Signal alarm of load 2 output
16#, 17#: Making signal output
18#, 19#: Closing signal output
20#: Communication shield ground line
21#~24#: Voltage signal input of phase N,A,B,C
(With voltage measurement);
21#~23# is a set of auxiliary switches
(Without voltage measurement)
22# common terminal,contact capacity AC230V,5A
25#, 26#: Auxiliary contact (capacity:AC230V,5A)
27#,28#: Under-voltage release(Connected to the main circuit)
29#,30#: Shunt release
31#,32#: Closing electromagnet
33#,34#,35#: Energy storage motor
36#~40#: Auxiliary contact (capacity:AC230V,5A)

«Электро-Профи» - www.ep.ru

Six pairs change-over contacts standard type (M/3M)

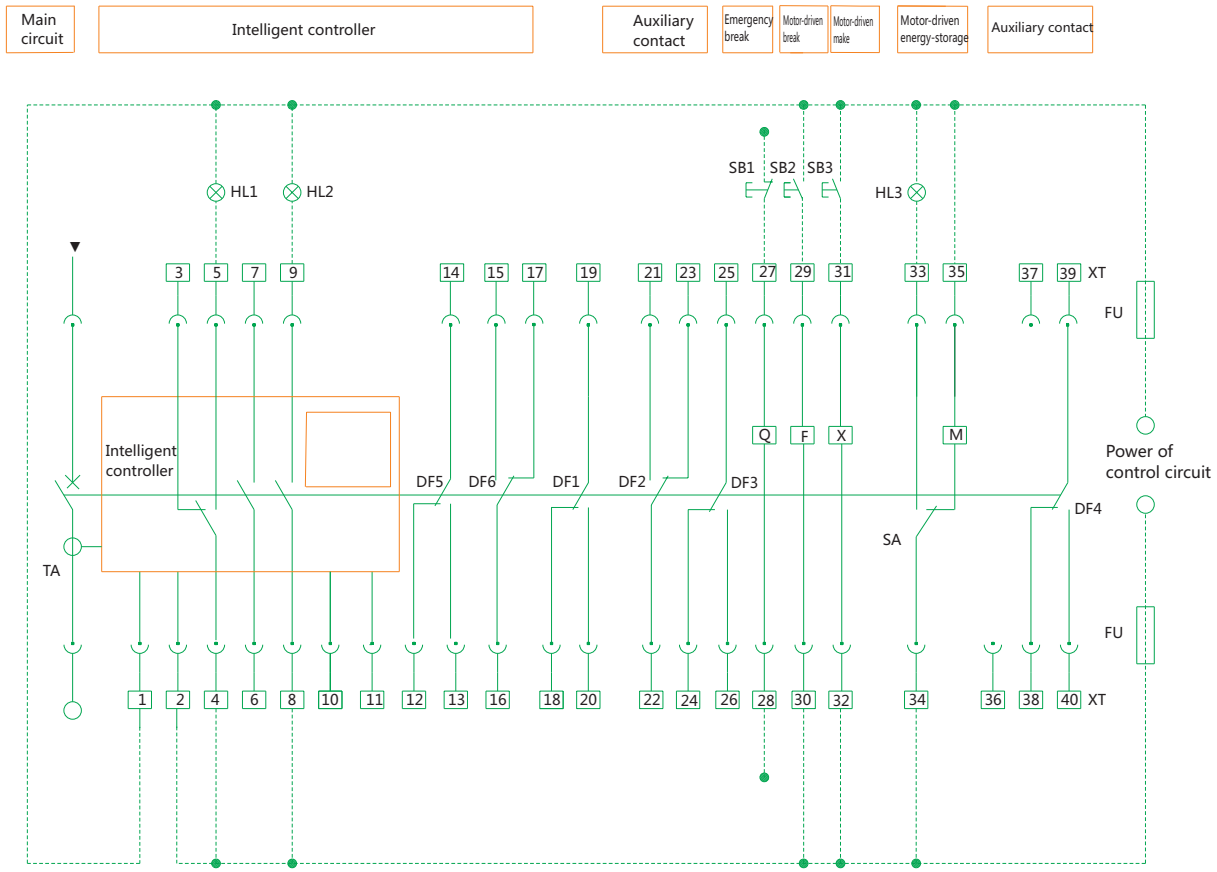

HL1: Failure indicator
HL2: Close indicator
HL3: Energy storage indicator
SB1: Under-voltage button
SB2: Shunt button
SB3: Close button
Q: Under-voltage release
F: Shunt release
X: Close release
M: Energy storage motor
DF1-DF6: Auxiliary switch
1#, 2#: Auxiliary power input
3#,4#,5#: Fault trip contact output(4# common terminal,contact capacity AC230V,5A
6#, 7#: to be connected with current transformer(selective)
8#,9#: Making indicator (capacity AC400V,1A)
12#~26#: Auxiliary contact(auxiliary contact capacity: AC230V,1A)
27#,28#: Under-voltage release(Connected to the main circuit)
29#,30#: Shunt release
31#,32#: Closing release
33#,34#:Energy storage indicator
34#,35#: Energy storage motor
38#~40#: Auxiliary contact(auxiliary contact capacity: AC230V,1A)

Note:

Six pairs change-over contacts , without any additional function.
Dashed is to be connected by users.

«Электро-Профи» - www.ep.ru

6.2 NA1-2000X~6300X

The secondary circuit wiring for NA1-2000X~6300X with standard type (M) intelligent controller and instantaneous under-voltage release

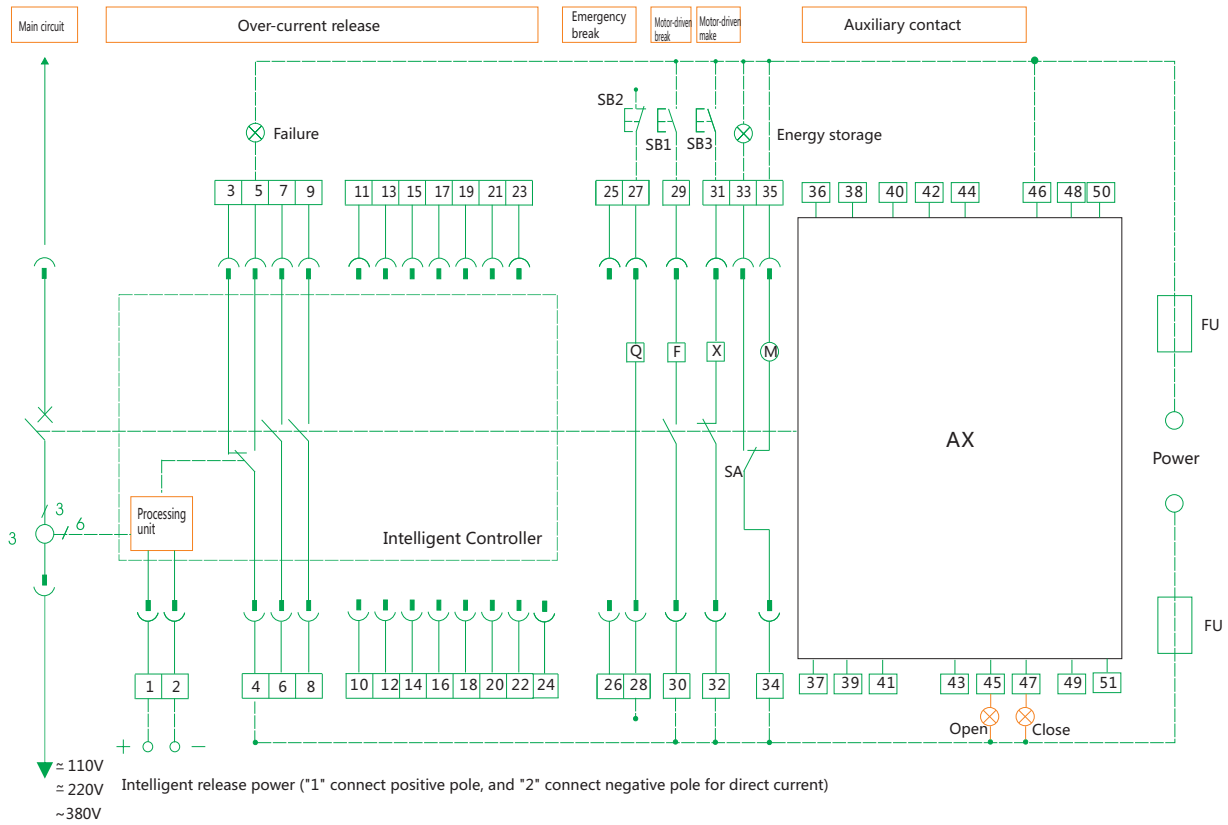

SB1: Shunt button
SB2: Under-voltage button
SB3: Making button
Q: Under-voltage release
F: Shunt release
X: Closing electromagnet
M: Energy storage motor
XT: Connection terminal
SA: Position switch
Note: If control voltage of Q, F, X is different from each other, they can be connected to different power.

1#,2#: Auxiliary power input
3#,4#,5#: Fault trip contact output(4# common terminal)
6#,7#,8#,9#: Auxiliary contact, normal open,
10#~24#: empty
25#,26#: to be connected with current transformer(selective)
27#,28#: Under-voltage release(Connected to the main circuit)
29#,30#: Shunt release
31#,32#: Closing release
33#,34#: Energy storage indicator
34#,35#: Energy storage motor
36#,51#: Auxiliary contact

The auxiliary contact modes for customer use

I Four pairs change-over contacts

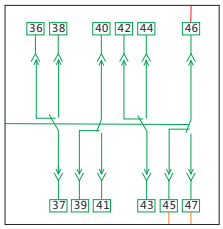

II Five pairs change-over contacts

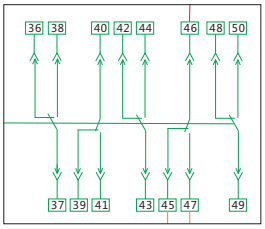

Circuit explanation for signal output:
a. Broken-line parts shall be provided by customers.
b. Terminals 6#,7# can output NC (normal close) contact if that is required by users.
c. Terminal 35# can be directly connected to power (automatic pre-storing energy), alternatively connect power after connecting NO button (manual-controlled pre-storing energy).
d. Terminals 21#~24# is only for wiring with function meter display. (excluding the special wiring)

«Электро-Профи» - www.ep.ru

The secondary circuit wiring for NA1-2000X~6300X with type (3M) intelligent controller and instantaneous under-voltage release

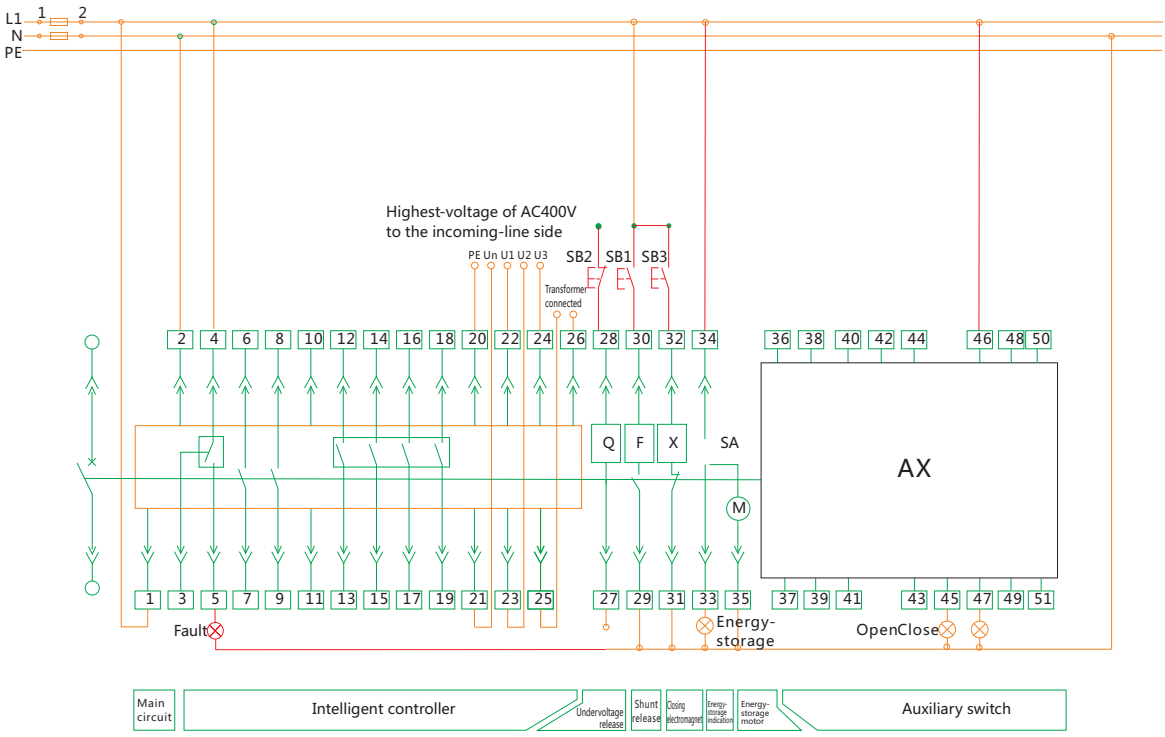

The auxiliary contact modes for customer use

Ⅰ Four pairs change-over contacts

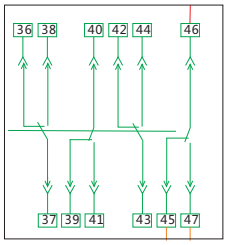

Ⅱ Five pairs change-over contacts

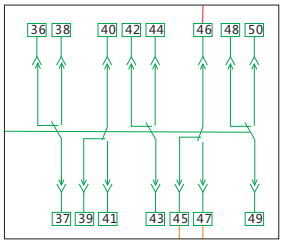

SB1: Shunt button
SB2: Under-voltage button
SB3: Making button
Q: Under-voltage release
F: Shunt release
X: Closing release
M: Energy storage motor
XT: connection terminal
SA: Position switch
1#, 2#: Intelligent controller power input
Note: When the power supply of the intelligent controller is AC power, the 1#~2# connects to the AC power directly. When the power supply is DC power, forbid connecting the 1#~2# to the DC power directly. Add a DC power supply module, then the DC power connect to the input terminal of the DC power supply module, and the 1#~2# connect to the output terminal of the DC power supply module, or else the intelligent controller will be damaged.

3#,4#,5#: Fault trip contact output(4#common terminal)
6#,7#,8#,9#: Auxiliary contact(normal open)
10#~11#: empty
12#~19#: The programmable output terminal. The normal products without these terminals, but if the customer special ordered, the cost extra added.

3M type acquiescence output:
12#,13#: Signal alarm of load 1 output; 14#,15#: Signal alarm of load2 output
16#,17#: Self-diagnose alarm; 18#,19#: Fault trip; 20#: PE line; 21#~24#: Display the voltage of the signal input.
The normal products without these terminals,
if the customer special ordered the function meter, the cost extra added.
21#: N phase input terminal
22#,23#,24#: A, B, C three phase power input terminal (note the sequence)(highest-voltage of AC 400V)

25#,26#: Connect to the N phase current transformer or the input terminal of the current leakage transformer.
The normal products without these terminals, if the customer special ordered, the cost extra added.
27#,28#: Under-voltage release(Connected to the main circuit); 29#,30#: Shunt release; 31#,32#: Closing release;
33#,34#: Energy storage indicator; 34#,35#: Energy storage motor; 36#~51#: Auxiliary contact

Note:
a. Red colored part is to be connected by users
b. When the power system is three phase three wire, directly connect the Un to U2.
(If the voltage exceeds 400V, special explanation when ordered)

«Электро-Профи» - www.ep.ru

The secondary circuit wiring for NA1-2000X~6300X with type (3H) intelligent controller and instantaneous under-voltage release

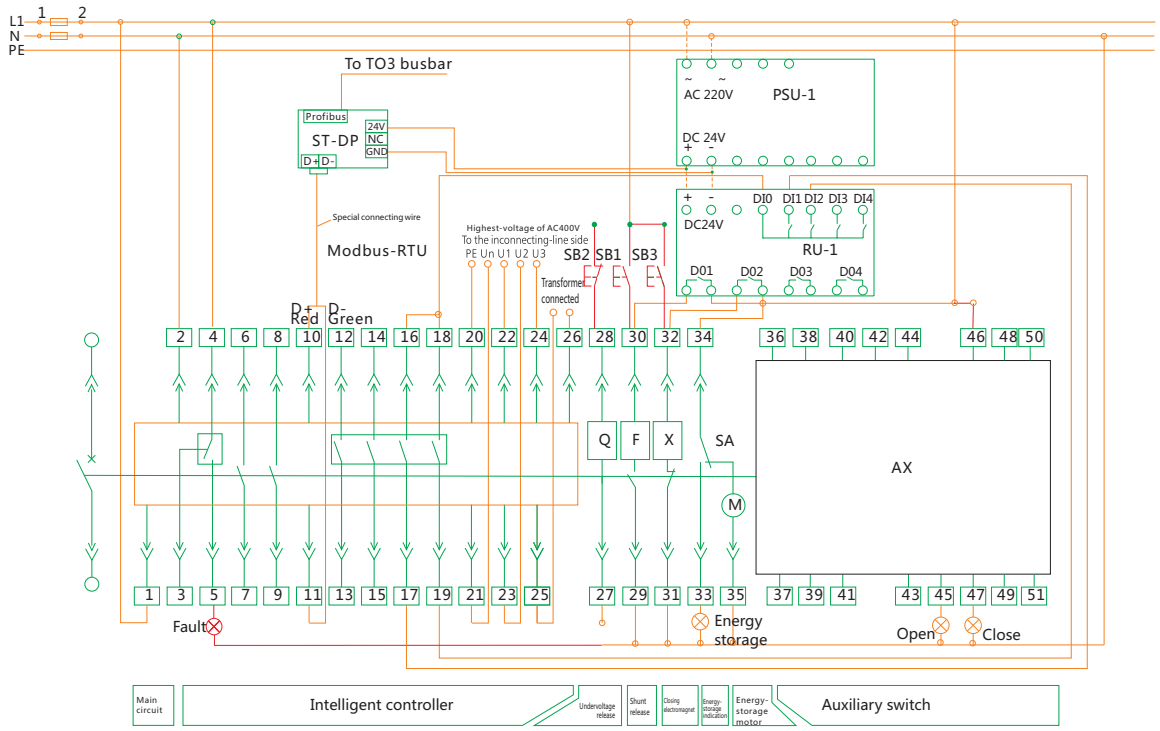

The auxiliary contact modes for customer use

I Four pairs change-over contacts

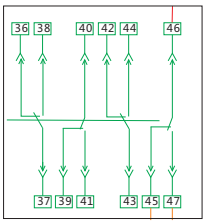

II Five pairs change-over contacts

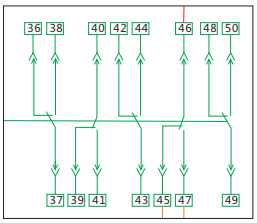

SB1: Shunt button; SB2: Under-voltage button
SB3: Making button; Q: Under-voltage release
F: Shunt release; X: Closing release
M: Energy storage motor; XT: connection terminal
SA: Position switch
1#, 2#: Intelligent controller power input
Note: When the power supply of the intelligent controller is AC power, the 1#~2# connects to the AC power directly. When the power supply is DC power, forbid connecting the 1#~2# to the DC power directly. Add a DC power supply module, then the DC power connect to the input terminal of the DC power supply module, and the 1#~2# connect to the output terminal of the DC power supply module, or else the intelligent controller will be damaged.

3#,4#,5#: Fault trip contact output(4# common terminal)
6#,7#,8#,9#: Auxiliary contact (normal open)
10#~11#: communication output
12#,13#: Signal alarm of load 1 output; 14#,15#: Signal alarm of load2 output
16#,17#:Breaking signal output; 18#,19#:Making signal output
20#: PE line; 21#: N phase input terminal
22#,23#,24#: A, B, C three phase power input terminal (note the sequence)(highest-voltage of AC 400V)

25#26#: Connect to the N phase current transformer or the input terminal of the current leakage transformer.
The normal products without these terminals, if the customer special ordered, the cost extra added.
ST~DP: DP protocol module. There is no need for the ST-DP protocol module,
if the communication protocol is Modbus-RTV. But when the communication protocol is Profibus-DP,
the ST-DP protocol module is necessary, but the cost extra added.
ST power module IV: power converter (optional components)
ST201: Magnify the signal capacity of the controller. (optional components) If the customer special ordered,
the cost extra added.
27#,28#: Under-voltage release(Connected to the main circuit); 29#,30#: Shunt release
31#,32#: Closing release; 33#,34#: Energy storage indicator
34#,35#: Energy storage motor; 36#~51#: Auxiliary contact

Note:

a. Red colored part is to be connected by users
b. When the power system is three phase three wire, directly connect the Un to U2.
(If the voltage exceeds 400V, special explanation when ordered)

«Электро-Профи» - www.ep.ru

The secondary circuit wiring for NA1-2000X~6300X with standard type (M) intelligent controller and time-delay under-voltage release

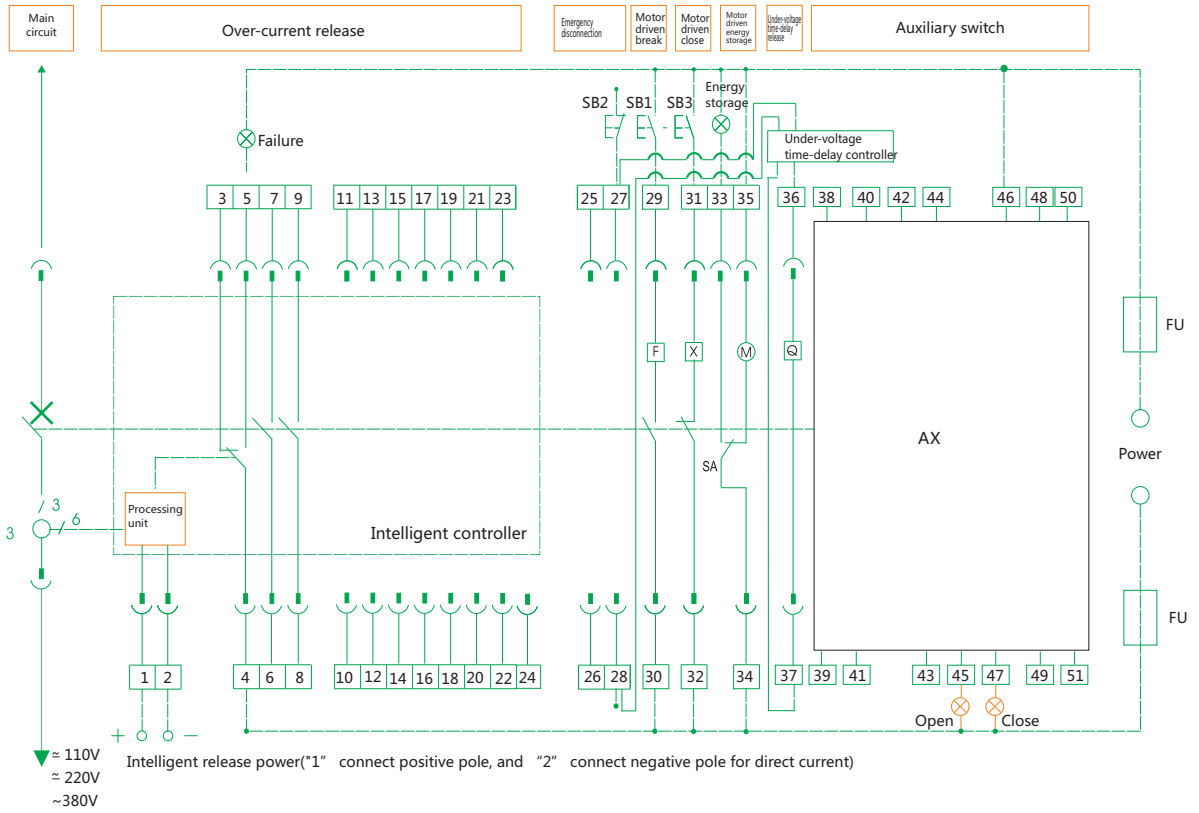

The auxiliary contact modes for customer use

I Four pairs change-over contacts

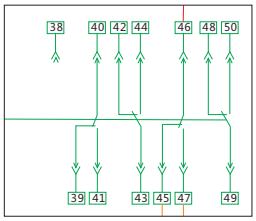

SB1: Shunt button SB2: Under-voltage button SB3: Making button
Q: Under-voltage time-delay release F: Shunt release
X: Closing electromagnet M: Energy storage motor
XT: Connection terminal SA: Position switch
Note: If control voltage of Q, F, X is different from each other, they can be connected to different power.

1#,2#: Auxiliary power input
3#,4#,5#: Fault trip contact output(4# common terminal)
6#,7#,8#,9#: Auxiliary contact (normal open)
10#~24#: empty
25#,26#: to be connected with current transformer(selective)
27#,28#: Under-voltage release(Connected to the main circuit)
29#,30#: Shunt release
31#,32#: Closing release
33#,34#: Energy storage indicator
34#,35#: Energy storage motor
36#,37#: Under-voltage time delay release
38#~51#: Auxiliary contact

Circuit explanation for signal output:
a. Broken-line parts shall be provided by customers.
b. Terminals 6#,7# can output NC (normal close) contact if that is required by users.
c. Terminal 35# can be directly connected to power (automatic pre-storing energy), alternatively connect power after connecting NO button (manual-controlled pre-storing energy).
d. The 21#~24# is only for wiring with function meter display. (Excluding the special wiring)

«Электро-Профи» - www.ep.ru

The secondary circuit wiring for NA1-2000X~6300X with type (3M) intelligent controller and time-delay under-voltage release

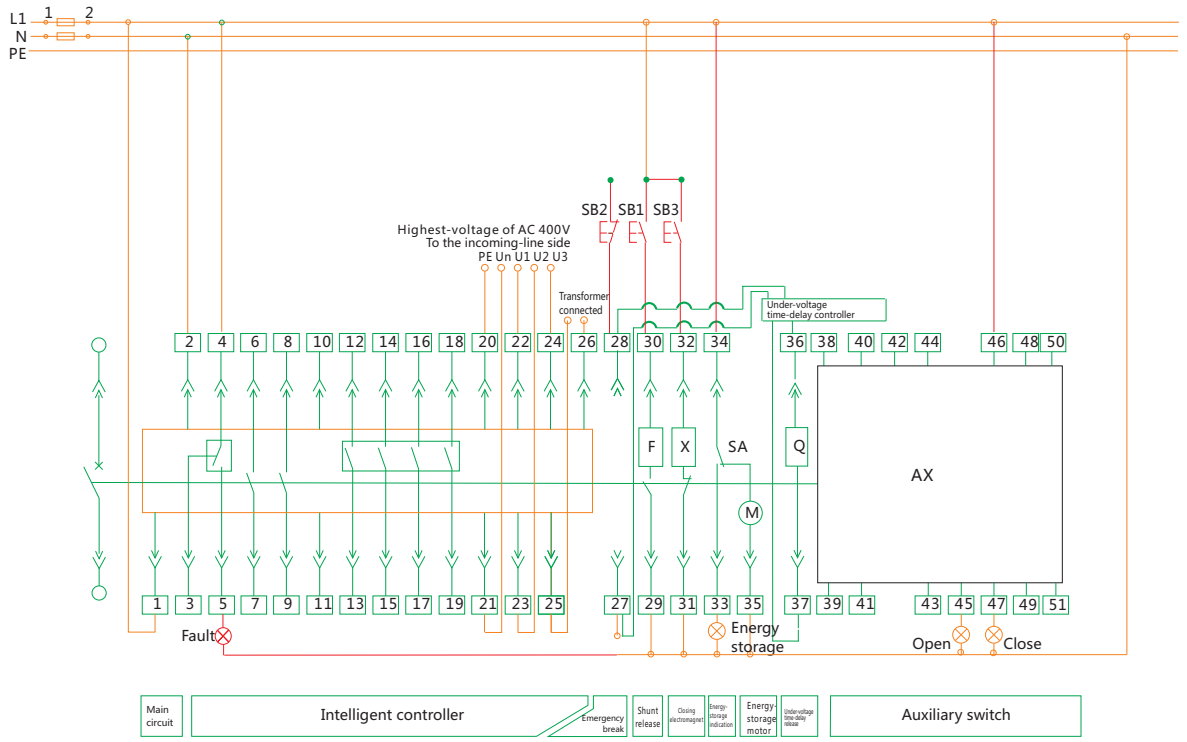

The auxiliary contact modes for customer use

I Four pairs change-over contacts

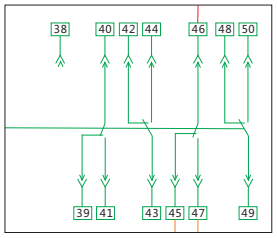

SB1: Shunt button; SB2: Under-voltage button
SB3: Making button; Q: Under-voltage release
F: Shunt release; X: Closing release
M: Energy storage motor; XT: Connection terminal
SA: Position switch
1#, 2#: Intelligent controller power input
Note: When the power supply of the intelligent controller is AC power, the 1#~2# connects to the AC power directly. When the power supply is DC power, forbid connecting the 1#~2# to the DC power directly. Add a DC power supply module, then the DC power connect to the input terminal of the DC power supply module, and the 1#~2# connect to the output terminal of the DC power supply module, or else the intelligent controller will be damaged.

3#,4#,5#: Fault trip contact output(4# common terminal); 6#,7#,8#,9#: Auxiliary contact (normal open)
10#~11#: empty; 12#~19# are the programmable output terminal. The normal products without these terminals, but if the customer special ordered, the cost extra added.

3M type acquiescence output:
12#,13#: Signal alarm of load 1 output; 14#,15#: Signal alarm of load2 output
16#,17#: Self-diagnose alarm; 18#,19#: Fault trip
20#: PE line; 21#~24#: Display the voltage of the signal input. The normal products without these terminals, if the customer special ordered the function meter, the cost extra added.
21#: N phase input terminal; 22#,23#,24#: A, B, C three phase power input terminal (note the sequence)(Highest-voltage of AC400V)

25#,26# Connect to the N phase current transformer or the input terminal of the current leakage transformer. The normal products without these terminals, if the customer special ordered, the cost extra added.
27#,28#: Under-voltage release(Connected to the main circuit); 29#,30#: Shunt release
31#,32#: Closing release; 33#,34#: Energy storage indicator
34#,35#: Energy storage motor; 36#,37#: Under-voltage time delay release
38#~51#: Auxiliary contact

Note:
a. Red colored part is to be connected by users
b. When the power system is three phase three wire, directly connect the Un to U2. (If the voltage exceeds 400V, special explanation when ordered)

«Электро-Профи» - www.ep.ru

The secondary circuit wiring for NA1-2000X~6300X with type (3H) intelligent controller and time-delay under-voltage release

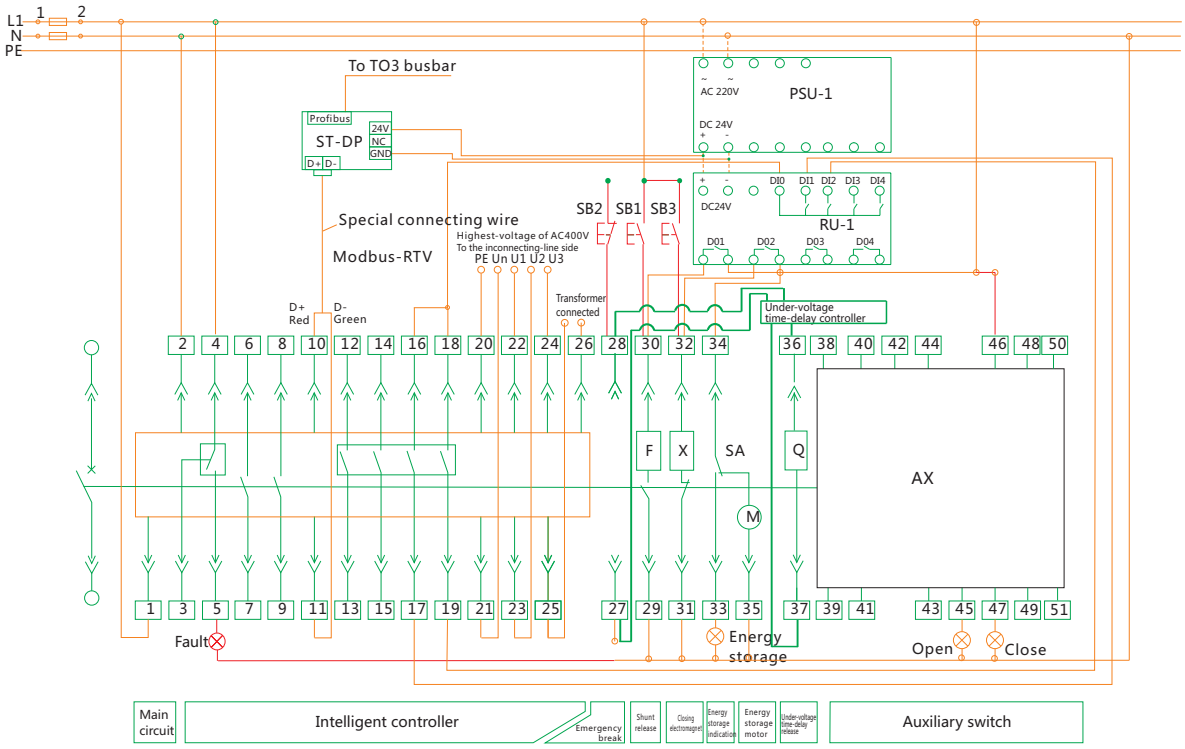

The auxiliary contact modes for customer use

I Four pairs change-over contacts

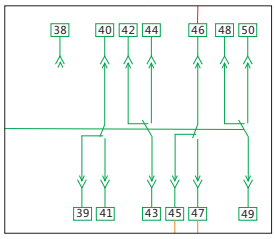

SB1: Shunt button; SB2: Under-voltage button
SB3: Making button; Q: Under-voltage release
F: Shunt release; X: Closing release
M: Energy storage motor; XT: Connection terminal
SA: Position switch
1#, 2#: Intelligent controller power input
Note: When the power supply of the intelligent controller is AC power, the 1#~2# connects to the AC power directly. When the power supply is DC power, forbid connecting the 1#~2# to the DC power directly. Add a DC power supply module, then the DC power connect to the input terminal of the DC power supply module, and the 1#~2# connect to the output terminal of the DC power supply module, or else the intelligent controller will be damaged.

3#,4#,5#: Fault trip contact output(4# common terminal)
6#,7#,8#,9#: Auxiliary contact (normal open)
10#~11#: Communication output; 12#,13#: Signal alarm of load 1 output
14#,15# : Signal alarm of load 2 output; 16#,17#: Breaking signal output; 18#,19#: Closing signal output
20#: PE line; 21#: N phase input terminal
22#,23#,24#: A, B, C three phase power input terminal (note the sequence)(highest-voltage of AC400V)
25#,26# Connect to the N phase current transformer or the input terminal of the current leakage transformer.
The normal products without these terminals, if the customer special ordered, the cost extra added.
ST~DP: DP protocol module. There is no need for the ST-DP protocol module,
if the communication protocol is Modbus-RTV. But when the communication protocol is Profibus-DP,
the ST-DP protocol module is necessary, but the cost extra added.
ST power module IV: power converter (optional components)
ST201: Magnify the signal capacity of the controller. (optional components)
If the customer special ordered, the cost extra added.
27#,28#: Under-voltage release(Connected to the main circuit); 29#,30#: Shunt release
31#,32#: Closing release; 33#,34#: Energy storage indicator
34#,35#: Energy storage motor; 36#,37#: Under-voltage time delay release
38#~51#: Auxiliary contact

Note:
a. Red colored part is to be connected by users
b. When the power system is three phase three wire, directly connect the Un to U2.
(If the voltage exceeds 400V, special explanation when ordered)

«Электро-Профи» - www.ep.ru

7. Installation

7.1 Installation

7.1.1 Unload the breaker from the soleplate of package. If it is drawout type, firstly pull out the handle under the drawer-base of breaker, and plug it into the hole on central part of plastic cover under the drawer-base crossbeam, anticlockwise turns the handle, the body will slowly slide along the outside of drawer-base.

When the guide rod points to separated position and handle can't be rotated any longer, pull out the handle and firmly grasp the aluminum handle on drawer-base, pull out the breaker body and remove it form the base, then move the base from the sole plate and clean up the dirty things inside the drawer-base.

Possible positions

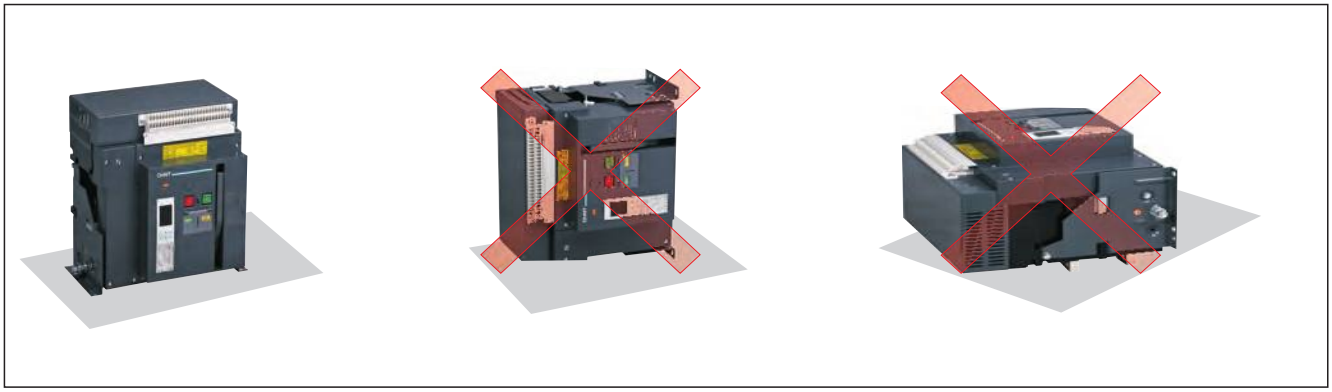

7.1.2 Check the insulation resistance with a 500V megger, resistance should not be less than 20MΩ when ambient temperature is 20℃±5℃ and relative humidity is 50%~70%. Otherwise dry it.

7.1.3 Power supply

NA1 devices can be supplied either from the top or from the bottom without reduction in performance, in order to facilitate connection when installed in a switchboard.

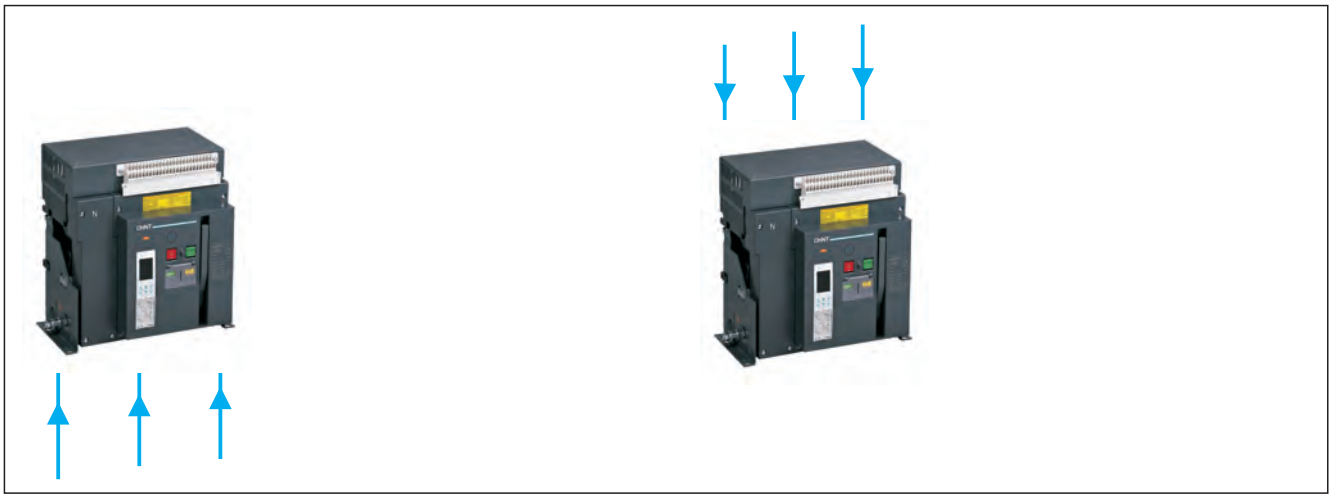

7.1.4 Put the breaker (fixed-type) or drawer-base (drawout-type) into the installation-bracket, and make it fixed, directly connect the cable wire of main circuit to the bus wire of fixed-type circuit breaker. Alternatively put breaker body onto the slideway of drawer-base. Plug the handle into installation hole, clockwise turns it until the under-part of drawer-base points at the connection position and " click" sound is heard. It indicates that breaker body has been connected to its place, then connect the cable of main circuit to drawer-base.

Mounting the circuit-breaker

It is important to distribute the weight of the device uniformly over a rigid mounting surface such as rails or a base plate.

This mounting plane should be perfectly flat (tolerance on support flatness: 2 mm).This eliminates any risk of deformation which could interfere with correct operation of the circuit breaker.

NA1 devices can also be mounted on a vertical plane using the special brackets.

«Электро-Профи» - www.ep.ru

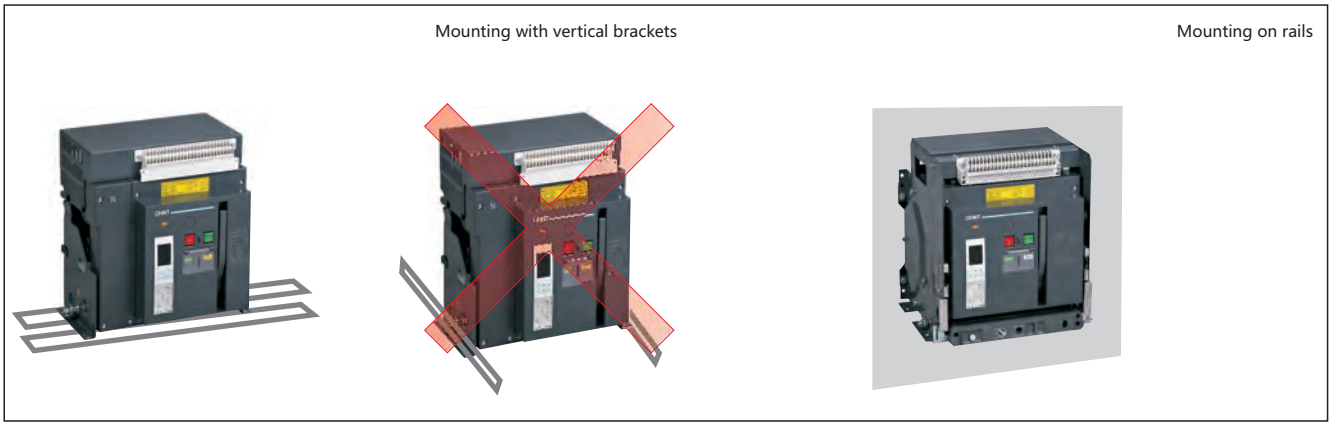

C

7.1.5 Partitions

Sufficient openings must be provided in partitions to ensure good air circulation around the circuit breaker;
Any partition between upstream and downstream connections of the device must be made of nonmagnetic material.
For high-currents, of 2500 A and upwards, the metal supports or barriers in the immediate vicinity of a conductor ;Metal barriers through which a conductor passes must not form a magnetic loop.

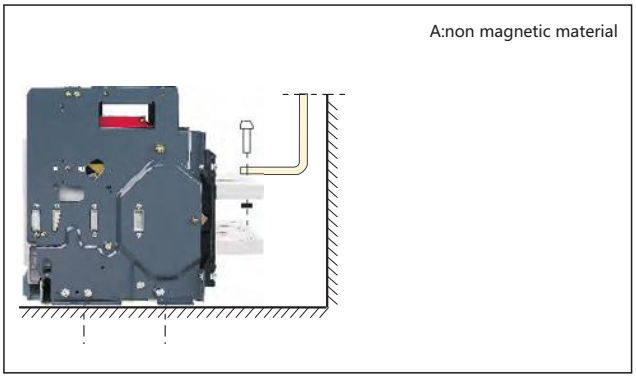

Busbars

The mechanical connection must be exclude the possibility of formation of a magnetic loop around a conductor.

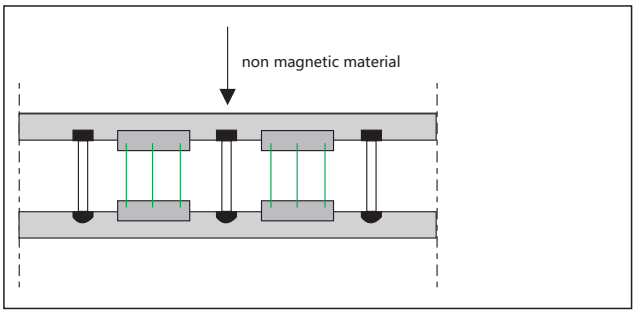

7.1.6 Busbar connections

The busbars should be suitably adjusted to ensure the connection points are positioned on the terminals before the bolts B are inserted. The connections are held by the supporter which is fixed to the framework of the switchboard, in this way the circuit breaker terminals do not have to support its weight C.
(This support should be placed close to the terminals).

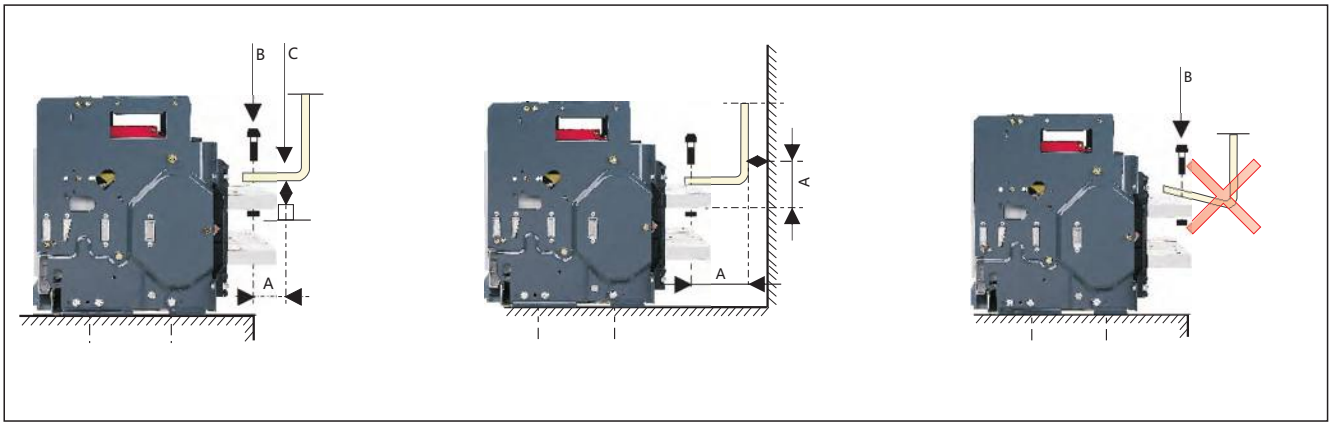

«Электро-Профи» - www.ep.ru

7.1.7 Main circuit adopts cable connection

Users should not apply too strong mechanical strength on the terminals of Air Circuit Breaker. Extend the bus-bar of circuit breaker with connecting bus-bar, position the wiring piece of cable before inserting bolts; the cable should be fixed on the frame of distributing cabinet firmly.

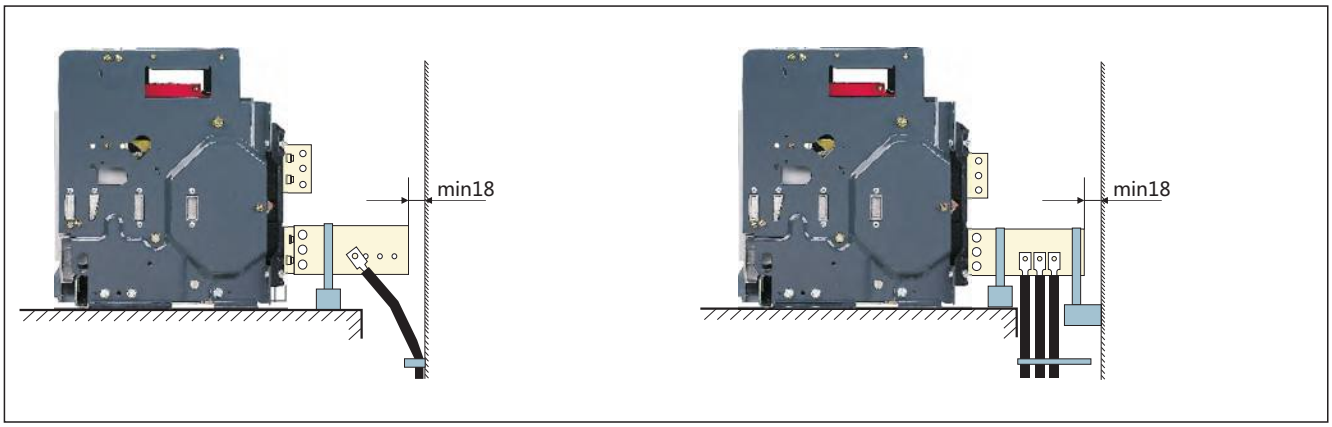

7.1.8 Clamping

Correct clamping of busbars depends on the tightening torques used for the nuts and bolts,etc. Over-tightening may have the same consequences as under-tightening.

For connecting busbars to the circuit breaker, the tightening torques to be used are shown in the table below. These values are for use with copper busbars and steel nuts and bolts, class ≥8.8.

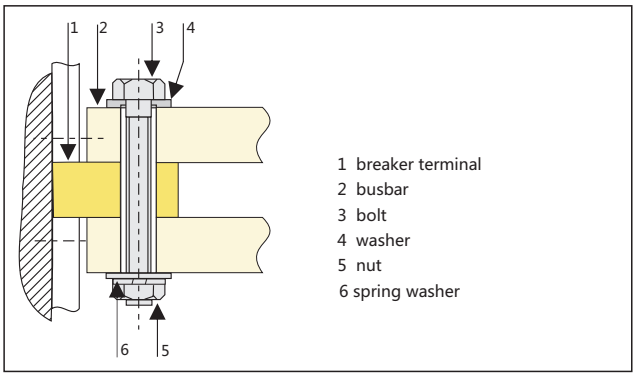

Examples

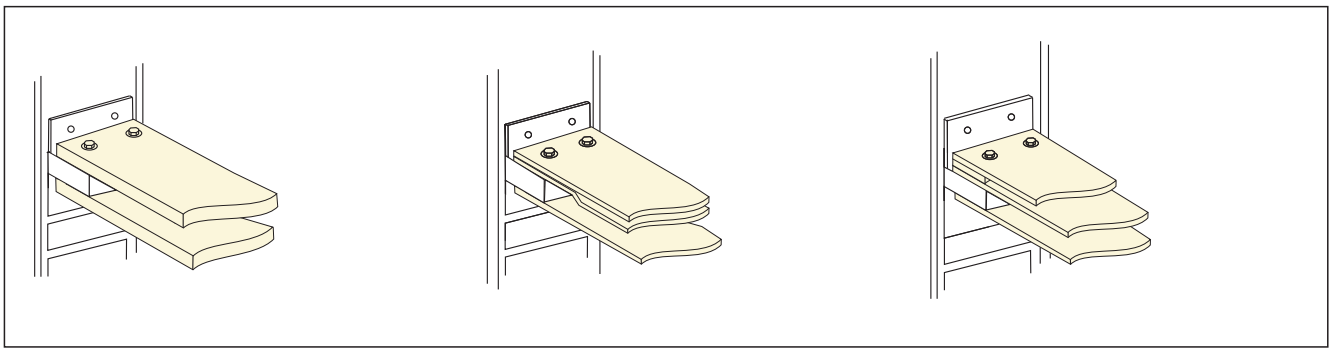

Preferred tightening torque for NA1's tightening components

Type of screw	Application	Preferred tightening torque
M3	Screws for secondary terminals	0.5~0.7 N·m
M10	Installing bolts of Air Circuit Breaker	38~55 N·m
M12	Connection terminals	61~94 N·m

«Электро-Профи» - www.ep.ru

Connected position	Test position	Disconnected position	Drawout position
			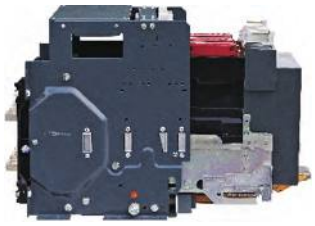
	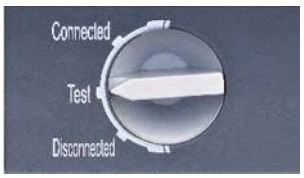		
1.Both main circuit and control circuit are connected. 2.Normal application conditions	1.The main circuit is disconnected, and the control circuit is connected. 2.Test application conditions.	Neither the main circuit nor the control circuit is connected.	Main body is out of the drawer seat.

7.2 Wiring the secondary circuit according to electric principle diagram.

Note: Bolts, nuts, gaskets shouldn't be left inside the drawer seat to avoid being blocked.

7.3 Operation

Check the rated voltage of the following components whether conforms to the power voltage . Such as under voltage release, shunt release, closing electromagnet, motor-driven mechanism and intelligent controller.

7.4 Maintenance

Check the technical parameters in time or add some lubricating oil, etc.

This breaker structure is arranged vertically and modularized composition with each functioncell separated, which make the maintenance easy.

It has compact structure, reliable operation and strong free maintenance capability. Please check the technical parameters on the nameplate in accordance with the requirements of order before installation.

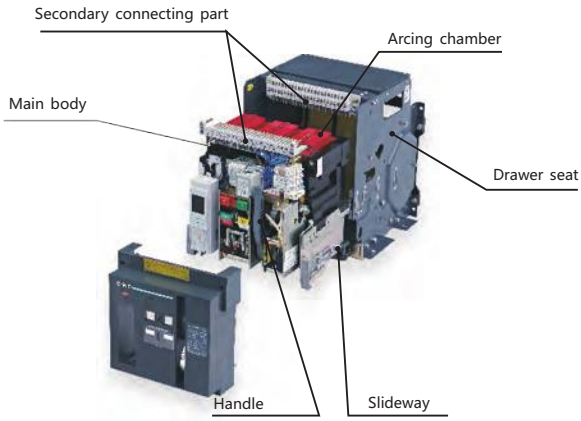

Making the secondary circuit power, the motor-driven mechanism can store energy automatically until hearing the click and energy stored indicating on the panel.

Otherwise press the storage handle for 6 times until hearing the click and the indicator display energy stored

And the closing operation can be realized either by closing electromagnet or manual button.

Manual energy-storage



Shake with the manual energy-storage handle up and down about six times to "click".

«Электро-Профи» - www.ep.ru

8. Recommendation for user's connecting bus-bar

Inm(A)		NA1-1000X					NA1-2000X/NA1-2000XN/NA1-2000XH						NA1-3200X/NA1-3200XN			NA1-4000X		NA1-6300X/NA1-6300XN		
In(A)		200	400	630	800	1000	630	800	1000	1250	1600	2000	2000	2500	3200	4000/3P	4000/4P	4000	5000	6300
Busbar	Thickness(mm)	5	5	5	6	8	5	6	8	10	12	10	8	10	10	10	-	10	10	10
	Width(mm)	30	30	40	50	50	60	60	60	60	60	60	100	100	100	120	-	100	100	100
	Number	1	2	2	2	2	2	2	2	2	2	3	2	2	4	4	-	5	7	8

Note: the specifications in the table is obtained as the ambient temperature of air circuit breaker is 40℃, with open installation; this is in compliance with the specification of copper busbars adopted under the heating conditions regulated in IEC/EN60947-2.

9. Power loss

Inm(A)		NA1-1000X					NA1-2000X/NA1-2000XN/NA1-2000XH						NA1-3200X/NA1-3200XN			NA1-4000X		NA1-6300X/NA1-6300XN		
In(A)		200	400	630	800	1000	630	800	1000	1250	1600	2000	2000	2500	3200	4000/3P	4000/4P	4000	5000	6300
Power loss (W)	Drawer type	40	101	123	110	171	70	110	172	268	440	530	384	600	737	921	-	575	898	1426
	Fixed type	33	85	107	94	146	34.4	50	78	122	200	262	200	312	307	450	-	-	-	-

10. A^2S curve

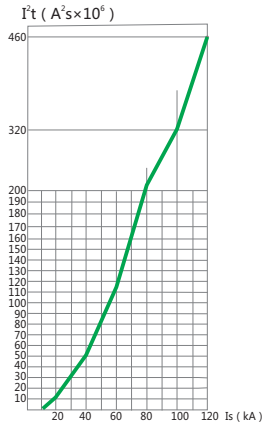

Is: prospective symmetrical current(of an a.c. circuit)

11. Temperature compensation correction

Standard	Ambient temperature	NA1-1000X					NA1-2000X/NA1-2000XN/NA1-2000XH						NA1-3200X/NA1-3200XN NA1-4000X				NA1-6300X/ NA1-6300XN		
IEC/EN60947-2	40℃	200	400	630	800	1000	630	800	1000	1250	1600	2000	2000	2500	3200	4000	4000	5000	6300
	45℃	200	395	623	800	985	630	800	1000	1250	1600	2000	2000	2500	3200	3800	4000	5000	6000
	50℃	200	384	605	800	960	630	800	1000	1250	1600	2000	2000	2500	3200	3600	4000	5000	5600
	55℃	200	328	584	800	924	630	800	1000	1250	1500	1900	2000	2300	3000	3400	4000	4800	5400
	60℃	200	248	548	800	870	610	800	1000	1250	1300	1800	2000	2200	2800	3200	4000	4800	5200
	65℃	192	192	500	800	810	610	800	1000	1250	1300	1650	2000	2200	2600	3000	4000	4600	5100
	70℃	170	170	473	750	750	473	800	1000	1200	1200	1400	2000	2000	2200	2520	4000	4000	4200

«Электро-Профи» - www.ep.ru

Note: The ACB is to calibrated at 40℃, special application please refer to the table above and the curve below.

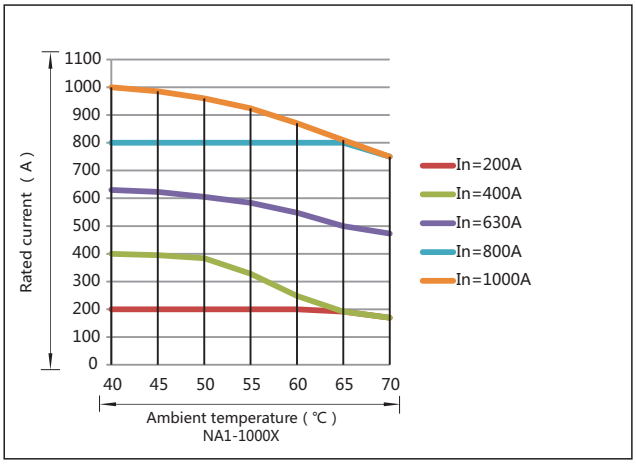

NA1-1000X

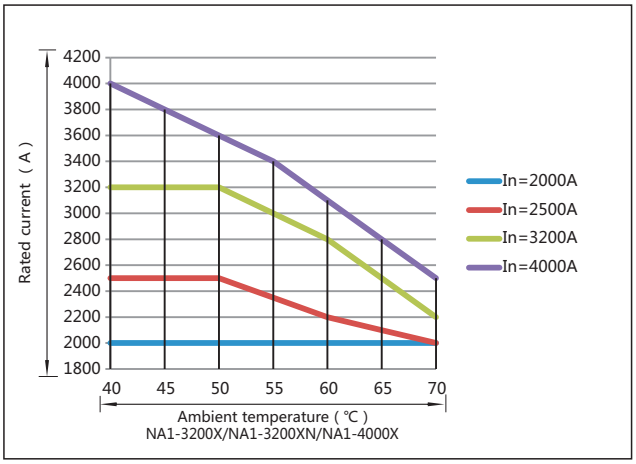

NA1-3200X/NA1-3200XN/NA1-4000X

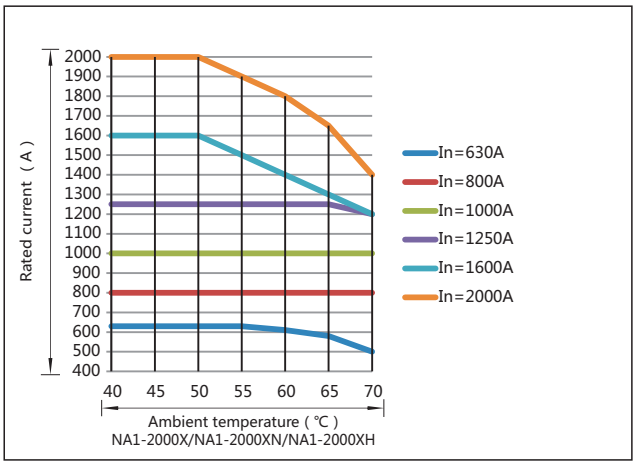

NA1-2000X/NA1-2000XN/NA1-2000XH

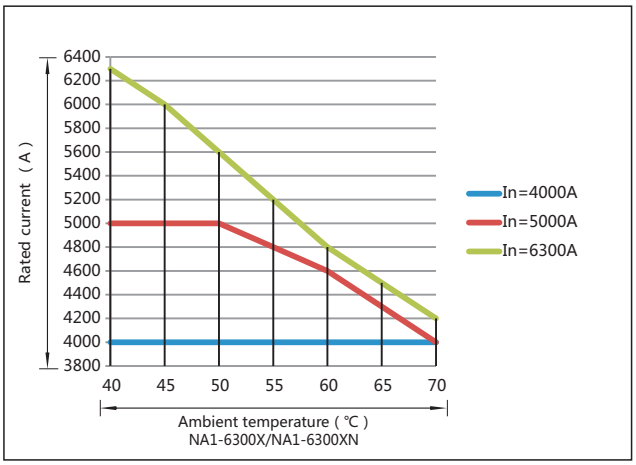

NA1-6300X/NA1-6300XN

«Электро-Профи» - www.ep.ru

12. Coordination recommendations

Capacity of transformer (kVA) & parallelly connected number	Rated current of transformer In(A)	Short circuit current of main circuit (kA)	Breaking capacity of air circuit breaker for main circuit (kA)
1×250	360	9	9
2×250	360	9	9
3×250	360	9	18.5
1×315	455	11.4	11.4
2×315	455	11.4	11.4
3×315	455	11.4	22.7
1×400	578	14.4	14.4
2×400	578	14.4	14.4
3×400	578	14.4	28.8
1×500	722	18	18
2×500	722	18	18
3×500	722	18	36.1
1×630	910	22.7	22.7
2×630	910	22.7	22.7
3×630	910	22.7	44.5
1×800	1154	19.3	19.3
2×800	1154	19.3	19.3
3×800	1154	19.3	38.5
1×1000	1444	24	24
2×1000	1444	24	24
3×1000	1444	24	48.1
1×1250	1805	30	30
2×1250	1805	30	30
3×1250	1805	30	60.1
1×1600	2310	36.5	36.5
2×1600	2310	36.5	36.5
3×1600	2310	36.5	73
1×2000	2887	48.2	48.2
2×2000	2887	48.2	48.2
3×2000	2887	48.2	96.3
1×2500	3608	60	60
2×2500	3608	60	60
1×3150	4550	75.8	75.8
2×3150	4550	75.8	75.8

«Электро-Профи» - www.ep.ru

Type of air circuit breaker for main circuit	Number and area of the busbar for main circuit (n×W×T)	Breaking capacity of air circuit breaker for branch circuit (kA)	Air circuit breaker for branch circuit
NA1-1000X-400	2×(5×30)	9	NA1, NM8
NA1-1000X-400		18.5	
NA1-1000X-400		27.5	
NA1-1000X-630	2×(5×40)	11.4	NA1, NM8
NA1-1000X-630		22.7	
NA1-1000X-630		34.1	
NA1-1000X-630	2×(5×40)	14.4	NA1, NM8
NA1-1000X-630		28.8	
NA1-1000X-630		43.2	
NA1-1000X-800	2×(6×50)	18	NA1, NM8
NA1-1000X-800		36.1	
NA1-1000X-800		54.1	
NA1-1000X-1000	2×(8×50)	22.7	NA1, NM8
NA1-1000X-1000		44.5	
NA1-2000X-1000		67.2	
NA1-2000X-1250	2×(10×60)	19.3	NA1, NM8
NA1-2000X-1250		38.5	
NA1-2000X-1250		57.8	
NA1-2000X-1600	2×(12×60)	24	NA1, NM8
NA1-2000X-1600		48.1	
NA1-2000X-1600		72.1	
NA1-2000X-2000	3×(10×60)	30	NA1, NM8
NA1-2000X-2000		60.1	
NA1-2000X-2000		90.1	
NA1-3200X-2500	2×(10×100)	36.5	NA1, NM8
NA1-3200X-2500		73	
NA1-3200X-2500		109.5	
NA1-3200X-3200	4×(10×100)	48.2	NA1, NM8
NA1-3200X-3200		96.3	
NA1-3200X-3200		144.5	
NA1-6300X-4000	4×(10×120)	60	NA1, NM8
NA1-6300X-4000		120	
NA1-6300X-5000	7×(10×100)	75.8	NA1, NM8
NA1-6300X-5000		151.6	

C

«Электро-Профи» - www.ep.ru

13. Selectivity protection

13.1 Selective protection between NM8 and NA1

			Circuit breaker	**NA1-2000X/NA1-2000XN/NA1-2000XH**			
Downstream			Upstream	Rated current (A)	630	800	1000	1250
				Default setting ratings of short time-delay 8In (kA)	5.04	6.4	8	10
				Setting range (kA)	0.63 ~ 9.45	0.8~12	1~15	1.25~18.75
				Delayed tripping time (s)	0.1, 0.2, 0.3, 0.4			
				Returnable time	0.06, 0.14, 0.23, 0.35			
Frame size rated current	**Rated current (A)**	**Instantaneous setting ratings (kA)**						
NM8-125 NM8S-125	16	0.16 0.19(motor)			0.63~9.45 0.63~9.45	0.8~12 0.8~12	1~15 1~15	1.25~18.75 1.25~18.75
	20	0.2 0.24(motor)			0.63~9.45 0.63~9.45	0.8~12 0.8~12	1~15 1~15	1.25~18.75 1.25~18.75
	25	0.25 0.30(motor)			0.63~9.45 0.63~9.45	0.8~12 0.8~12	1~15 1~15	1.25~18.75 1.25~18.75
	32	0.32 0.38(motor)			0.63~9.45 0.63~9.45	0.8~12 0.8~12	1~15 1~15	1.25~18.75 1.25~18.75
	40	0.40 0.48(motor)			0.63~9.45 0.6624~9.45	0.8~12 0.8~12	1~15 1~15	1.25~18.75 1.25~18.75
	50	0.50 0.60(motor)			0.69~9.45 0.828~9.45	0.8~12 0.828~12	1~15 1~15	1.25~18.75 1.25~18.75
	63	0.63 0.75(motor)			0.8694~9.45 1.035~9.45	0.8694~12 1.035~12	1~15 1.035~15	1.25~18.75 1.25~18.75
	80	0.80 0.96(motor)			1.104~9.45 1.325~9.45	1.104~12 1.325~12	1.104~15 1.325~15	1.25~18.75 1.325~18.75
	100	1.0 1.20(motor)			1.38~9.45 1.656~9.45	1.38~12 1.656~12	1.38~15 1.656~15	1.38~18.75 1.656~18.75
	125	1.25 1.5(motor)			1.725~9.45 2.07~9.45	1.725~12 2.07~12	1.725~15 2.07~15	1.725~18.75 2.07~18.75
NM8-250 NM8S-250	100	1.0 1.2(motor)			1.38~9.45 1.656~9.45	1.38~12 1.656~12	1.38~15 1.656~15	1.38~18.75 1.656~18.75
	160	1.6 1.92(motor)			2.208~9.45 2.65~9.45	2.208~12 2.65~12	2.208~15 2.65~15	2.208~18.75 2.65~18.75
	200	2.0 2.4(motor)			2.76~9.45 3.312~9.45	2.76~12 3.312~12	2.76~15 3.312~15	2.76~18.75 3.312~18.75
	250	2.5 3.0(motor)			3.45~9.45 4.14~9.45	3.45~12 4.14~12	3.45~15 4.14~15	3.45~18.75 4.14~18.75

«Электро-Профи» - www.ep.ru

C

		NA1-3200X/NA1-3200XN			NA1-4000X	NA1-6300X/NA1-6300XN		
1600	2000	2000	2500	3200	4000	4000	5000	6300
12.8	16	16	20	25.6	32	32	40	50.4
1.6~24	2~30	2~30	2.5~37.7	3.2~48	4~60	4~60	5~75	6.3~94.5
0.1, 0.2, 0.3, 0.4								
0.06, 0.14, 0.23, 0.35								
1.6~24 1.6~24	2~30 2~30	2~30 2~30	2.5~37.7 2.5~37.7	3.2~48 3.2~48	4~60 4~60	4~60 4~60	5~75 5~75	6.3~94.5 6.3~94.5
1.6~24 1.6~24	2~30 2~30	2~30 2~30	2.5~37.7 2.5~37.7	3.2~48 3.2~48	4~60 4~60	4~60 4~60	5~75 5~75	6.3~94.5 6.3~94.5
1.6~24 1.6~24	2~30 2~30	2~30 2~30	2.5~37.7 2.5~37.7	3.2~48 3.2~48	4~60 4~60	4~60 4~60	5~75 5~75	6.3~94.5 6.3~94.5
1.6~24 1.6~24	2~30 2~30	2~30 2~30	2.5~37.7 2.5~37.7	3.2~48 3.2~48	4~60 4~60	4~60 4~60	5~75 5~75	6.3~94.5 6.3~94.5
1.6~24 1.6~24	2~30 2~30	2~30 2~30	2.5~37.7 2.5~37.7	3.2~48 3.2~48	4~60 4~60	4~60 4~60	5~75 5~75	6.3~94.5 6.3~94.5
1.6~24 1.6~24	2~30 2~30	2~30 2~30	2.5~37.7 2.5~37.7	3.2~48 3.2~48	4~60 4~60	4~60 4 ~ 60	5~75 5~75	6.3~94.5 6.3~94.5
1.6~24 1.6~24	2~30 2~30	2~30 2~30	2.5~37.7 2.5~37.7	3.2~48 3.2~48	4~60 4~60	4 ~ 60 4 ~ 60	5~75 5~75	6.3~94.5 6.3~94.5
1.6~24 1.6~24	2~30 2~30	2~30 2~30	2.5~37.7 2.5~37.7	3.2~48 3.2~48	4~60 4~60	4 ~ 60 4 ~ 60	5~75 5~75	6.3~94.5 6.3~94.5
1.6~24 1.656~24	2~30 2~30	2~30 2~30	2.5~37.7 2.5~37.7	3.2~48 3.2~48	4~60 4~60	4 ~ 60 4 ~ 60	5~75 5~75	6.3~94.5 6.3~94.5
1.725~24 2.07~24	1.725~30 2.07~30	1.725~30 2.07~30	1.725~37.7 2.07~37.7	1.725~48 2.07~48	1.725~60 2.07~60	1.725~60 2.07~60	1.725~75 2.07~75	1.725~94.5 2.07~94.5
1.6~24 1.656~24	2~30 2~30	2~30 2~30	2.5~37.7 2.5~37.7	3.2~48 3.2~48	4~60 4~60	4 ~ 60 4 ~ 60	5~75 5~75	6.3~94.5 6.3~94.5
2.208~24 2.65~24	2.208~30 2.65~30	2.208~30 2.65~30	2.5~37.7 2.65~37.7	3.2~48 3.2~48	4~60 4~60	4~60 4~60	5~75 5~75	6.3~94.5 6.3~94.5
2.76~24 3.312~24	2.76~30 3.312~30	2.76~30 3.312~30	2.76~37.7 3.312~37.7	3.2~48 3.312~48	4~60 4~60	4~60 4~60	5~75 5~75	6.3~94.5 6.3~94.5
3.45~24 4.14~24	3.45~30 4.14~30	3.45~30 4.14~30	3.45~37.7 4.14~37.7	3.45~48 4.14~48	4~60 4.14~60	4~60 4.14~60	5~75 5~75	6.3~94.5 6.3~94.5

«Электро-Профи» - www.ep.ru

				Circuit breaker	NA1-2000X/NA1-2000XN/NA1-2000XH			
Downstream			Upstream	Rated current (A)	630	800	1000	1250
				Default setting ratings of short time-delay 8In (kA)	5.04	6.4	8	10
				Setting range (kA)	0.63 ~ 9.45	0.8~12	1~15	1.25~18.75
				Delayed tripping time (s)	0.1, 0.2, 0.3, 0.4			
				Returnable time	0.06, 0.14, 0.23, 0.35			
Frame size rated current	**Rated current (A)**	**Instantaneous setting ratings (kA)**						
NM8-630 NM8S-630	250	2.5 3.0(motor)			3.45~9.45 4.14~9.45	3.45~12 4.14~12	3.45~15 4.14~15	3.45~18.75 4.14~18.75
	315	3.15 3.78(motor)			4.347~9.45 5.216~9.45	4.347~12 5.216~12	4.347~15 5.216~15	4.347~18.75 5.216~18.75
	350	3.5 4.2(motor)			4.83~9.45 5.796~9.45	4.83~12 5.796~12	4.83~15 5.796~15	4.83~18.75 5.796~18.75
	400	4.0 4.8(motor)			5.52~9.45 6.624~9.45	5.52~12 6.624~12	5.52~15 6.624~15	5.52~18.75 6.624~18.75
	500	5.0 6.0(motor)			6.9~9.45 8.28~9.45	6.9~12 8.28~12	6.9~15 8.28~15	6.9~18.75 8.28~18.75
	630	6.3 7.56(motor)			8.694~9.45	8.694~12 10.44~12	8.694~15 10.44~15	8.694~18.75 10.44~18.75
NM8S-630	630	6.3 7.56(motor)			8.694~9.45	8.694~12 10.44~12	8.694~15 10.44~15	8.694~18.75 10.44~18.75
	700	7.0 8.4(motor)				9.66~12 11.59~12	9.66~15 11.59~15	9.66~18.75 11.59~18.75
	800	8.0 9.6(motor)				11.04~12	11.04~15 13.25~15	11.04~18.75 13.25~18.75
NM8-1250 NM8S-1250	1000	10 12(motor)					13.8~15	13.8~18.75 16.56~18.75
	1250	12.5 15.0(motor)						17.25~18.75

«Электро-Профи» - www.ep.ru

			NA1-3200X/NA1-3200XN			NA1-4000X	NA1-6300X/NA1-6300XN		
	1600	2000	2000	2500	3200	4000	4000	5000	6300
	12.8	16	16	20	25.6	32	32	40	50.4
	1.6~24	2~30	2~30	2.5~37.7	3.2~48	4~60	4~60	5~75	6.3~94.5
	0.1, 0.2, 0.3, 0.4								
	0.06, 0.14, 0.23, 0.35								
	3.45~24 4.14~24	3.45~30 4.14~30	3.45~30 4.14~30	3.45~37.7 4.14~37.7	3.45~48 4.14~48	4~60 4.14~60	4~60 4.14~60	5~75 5~75	6.3~94.5 6.3~94.5
	4.347~24 5.216~24	4.347~30 5.216~30	4.347~30 5.216~30	4.347~37.7 5.216~37.7	4.347~48 5.216~48	4.347~60 5.216~60	4.347~60 5.216~60	5~75 5.216~75	6.3~94.5 6.3~94.5
	4.83~24 5.796~24	4.83~30 5.796~30	4.83~30 5.796~30	4.83~37.7 5.796~37.7	4.83~48 5.796~48	4.83~60 5.796~60	4.83~60 5.796~60	5~75 5.796~75	6.3~94.5 6.3~94.5
	5.52~24 6.624~24	5.52~30 6.624~30	5.52~30 6.624~30	5.52~37.7 6.624~37.7	5.52~48 6.624~48	5.52~60 6.624~60	5.52~60 6.624~60	5.52~75 6.624~75	6.3~94.5 6.624~94.5
	6.9~24 8.28~24	6.9~30 8.28~30	6.9~30 8.28~30	6.9~37.7 8.28~37.7	6.9~48 8.28~48	6.9~60 8.28~60	6.9~60 8.28~60	6.9~75 8.28~75	6.9~94.5 8.28~94.5
	8.694~24 10.44~24	8.694~30 10.44~30	8.694~30 10.44~30	8.694~37.7 10.44~37.7	8.694~48 10.44~48	8.694~60 10.44~60	8.694~60 10.44~60	8.694~75 10.44~75	8.694~94.5 10.44~94.5
	8.694~24 10.44~24	8.694~30 10.44~30	8.694~30 10.44~30	8.694~37.7 10.44~37.7	8.694~48 10.44~48	8.694~60 10.44~60	8.694~60 10.44~60	8.694~75 10.44~75	8.694~94.5 10.44~94.5
	9.66~24 11.59~24	9.66~30 11.59~30	9.66~30 11.59~30	9.66~37.7 11.59~37.7	9.66~48 11.59~48	9.66~60 11.59~60	9.66~60 11.59~60	9.66~75 11.59~75	9.66~94.5 11.59~94.5
	11.04~24 13.25~24	11.04~30 13.25~30	11.04~30 13.25~30	11.04~37.7 13.25~37.7	11.04~48 13.25~48	11.04~60 13.25~60	11.04~60 13.25~60	11.04~75 13.25~75	11.04~94.5 13.25~94.5
	13.8~24 16.56~24	13.8~30 16.56~30	13.8~30 16.56~30	13.8~37.7 16.56~37.7	13.8~48 16.56~48	13.8~60 16.56~60	13.8~60 16.56~60	13.8~75 16.56~75	13.8~94.5 16.56~94.5
	17.25~24 20.7~24	17.25~30 20.7~30	17.25~30 20.7~30	17.25~37.7 20.7~37.7	17.25~48 20.7~48	17.25~60 20.7~60	17.25~60 20.7~60	17.25~75 20.7~75	17.25~94.5 20.7~94.5

C

«Электро-Профи» - www.ep.ru

13.2 Selective protection in NA1

				Circuit breaker	NA1-2000X/NA1-2000XN/NA1-2000XH			
Downstream			Upstream	Rated current (A)	630	800	1000	1250
				Default setting ratings of short time-delay 8In (kA)	5.04	6.4	8	10
				Setting range (kA)	0.63 ~ 9.45	0.8~12	1~15	1.25~18.75
				Delayed tripping time (s)	0.1, 0.2, 0.3, 0.4			
				Returnable time	0.06, 0.14, 0.23, 0.35			
Frame size rated current	**Rated current (A)**	**Default instantaneous setting ratings 12In (kA)**						
NA1-2000X	400	4.8			6.348~9.45	6.348~12	6.348~15	6.348~18.75
	630	7.56				9.998~12	9.998~15	9.998~18.75
	800	9.6					12.696~15	12.696~18.75
	1000	12						15.87~18.75
	1250	15						
	1600	19.2						
	2000	24						
NA1-3200X	2000	24						
	2500	30						
	3200	38.4						
NA1-4000X	3200	38.4						
	4000	48						
	4000	48						
NA1-6300X	5000	60						
	6300	75						

Note: It can satisfy the selective protection if only the short time-delay setting value of the superior breaker 1.32 times more than the subordinate breaker, when the instantaneous setting value is adjustive.

«Электро-Профи» - www.ep.ru

		NA1-3200X/NA1-3200XN			NA1-4000X	NA1-6300X/NA1-6300XN		
1600	2000	2000	2500	3200	4000	4000	5000	6300
12.8	16	16	20	25.6	32	32	40	50.4
1.6~24	2~30	2~30	2.5~37.7	3.2~48	4~60	4~60	5~75	6.3~94.5
0.1, 0.2, 0.3, 0.4								
0.06, 0.14, 0.23, 0.35								
6.348~24	6.348~30	6.348~30	6.348~37.7	6.348~48	6.348~60	6.348~60	6.348~75	6.348~94.5
9.998~24	9.998~30	9.998~30	9.998~37.7	9.998~48	9.998~60	9.998~60	9.998~75	9.998~94.5
12.696~24	12.696~30	12.696~30	12.696~37.7	12.696~48	12.696~60	12.696~60	12.696~75	12.696~94.5
15.87~24	15.87~30	15.87~30	15.87~37.7	15.87~48	15.87~60	15.87~60	15.87~75	15.87~94.5
19.837~24	19.837~30	19.837~30	19.837~37.7	19.837~48	19.837~60	19.837~60	19.837~75	19.837~94.5
	25.392~30	25.392~30	25.392~37.7	25.392~48	25.392~60	25.392~60	25.392~75	25.392~94.5
			31.74~37.7	31.74~48	31.74~60	31.74~60	31.74~75	31.74~94.5
			31.74~37.7	31.74~48	31.74~60	31.74~60	31.74~75	31.74~94.5
				39.675~48	39.675~60	39.675~60	39.675~75	39.675~94.5
					50.784~60	50.784~60	50.784~75	50.784~94.5
					50.784~60	50.784~60	50.784~75	50.784~94.5
							63.48~75	63.48~94.5
							63.48~75	63.48~94.5
								79.35~94.5

C

«Электро-Профи» - www.ep.ru

Intelligent Controller of NA1 series

14 Protection Features of intelligent controller

14.1 M/H and 3M/3H intelligent controller UI

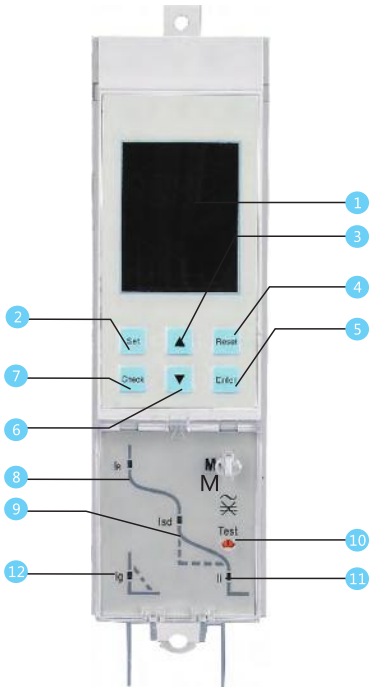

M/H control



3M/3H control

1. Display window
   Display current value, setting value, tripping time and so on
2. "Set"
   Switch to setting menu
3. "Up"
   Change the marquee or the selected parameter
4. "Return"
   Escape from this grade and return to upper menu or cancel the current selected parameter
5. "Enter"
   Enter into the next menu directed by the current item, or select current parameter and store modifications
6. "Down"
   Change the marquee or the selected parameter
7. "Check"
   Switch to query menu
8. "IR" light
   Overload long delay fault indication
9. "Isd" light
   Short-circuit Short delay indication
10. "Test"
    Trip test button
11. "Ii" light
    Instantaneous Short-circuit fault indication
12. "Ig" light
    Asymmetric earthing or neutral line fault indication
13. Alarm light
14. Communication light
15. Run light

Note: Method of 3M/3H controller application please refer to 3M/3H controller instruction.

14.2 3M/3H controller default interface and menu structure

3M/3H has four subjects menus and a default interface:

The subjects menus are composed of 4 parts: measurement menu, parameter set menu, protection parameter set menu, history and maintenance menu.

3M/3H controller default interface

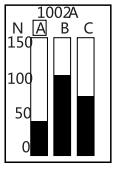

«Электро-Профи» - www.ep.ru

14.3 Explanation of M/H controller symbols

14.3.1 Explanation of symbols for reference

No.	symbol	explanation
1	IR= tR=	Long delay current setting, long delay time setting
2	Isd= tsd=	Short delay current setting, short delay time setting
3	Ig= tg=	Earthing current setting, earthing time setting
4	Ii=	Instantaneous current setting
5	N=	Neutral line protection parameter setting
6	TM	Trip simulated by software
7	TRIP	Tripped
8	RUN	Run normally
9	SET	Normally on: in settable state; Flickering: modifiable parameter
10	LIN	Storing state
11	P┣0	Protection setting interface
12	ГES	Trip simulated by software setting interface
13	RLR	Alarm setting or query interface
14	SYS	System setting interface (current calibration , frequency setting ...)
15	DBS	Communication setting interface of H-type controller
16	DOS	DO setting interface (H type with DO function)
17	FRU	Fault record query interface
18	COU	Operation times and life query interface
19	HDГ	Thermal capacity query interface
20	DOC	DO state query interface
21	H	Thermal capacity data
22	F--	Fault record number
23	R--	Alarm record number
24	Lg L1 L2 L3 LN	Earthing ,A,B,C,N phase
25	L L	The corresponding LED lamp will flash to indicate the fault type after tripping. The LED lamps are always on when the system is normal.

14.3.2 Operation and display instruction

There are four states, default state, setting state, query state and tripping state.

① Default state: default state is also called measuring state. All fault indicating lamps are off and maximum phase current is displayed. In this state, if "▲" or "▼" button is pressed, L1,L2,L3(LN),Lg current can be displayed in turn.

Example is shown below:

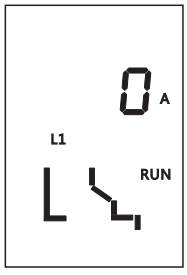

L1 phase current display interface

«Электро-Профи» - www.ep.ru

②Setting state: press "Set" button in default interface to enter into setting interface. Current protection parameters, overload pre-alarm value, earthing alarm threshold value and delay time can be queried or changed in setting state. Tripping can be simulated by software. In this state, "▲" or "▼" button can be pressed to add or subtract value when "SET" indicating lamp is flickering. Don't forget to press "Enter" button to save data after setting.
Example 1 of changing long delay time is shown below:

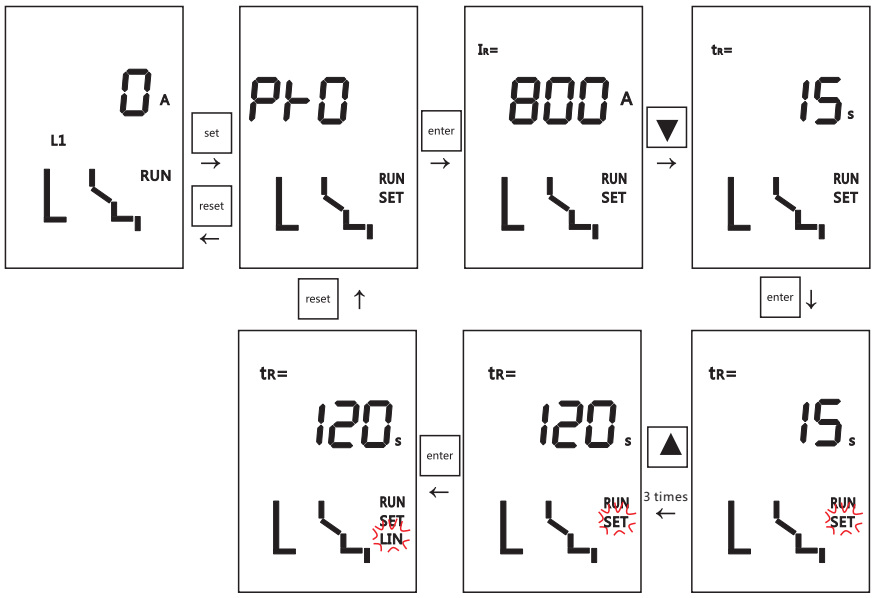

Example 2 of short delay tripping simulated by software is shown below:

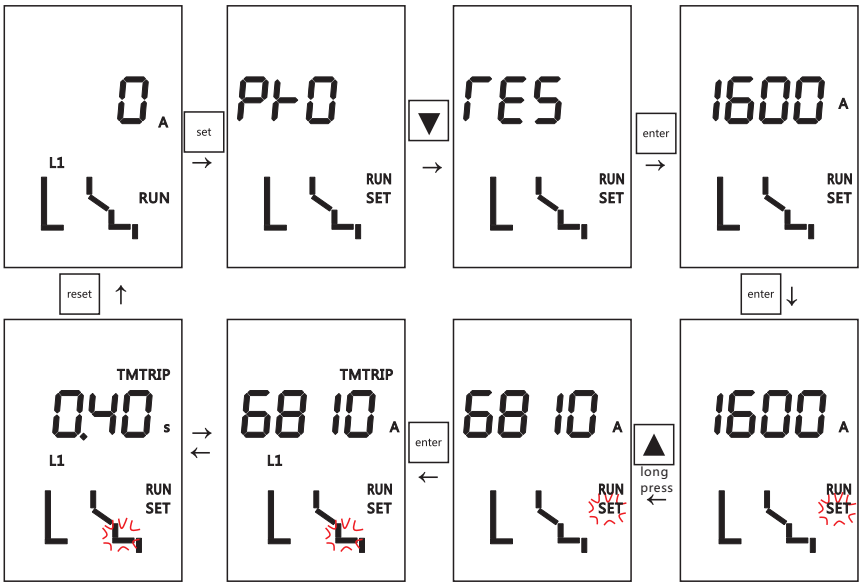

«Электро-Профи» - www.ep.ru

Example3 of setting earthing alarm threshold current is shown below:



③Query state: press "Check" button in default interface to enter into query interface. Last 8 fault records, last 8 alarm records, breaker operation times, life record and thermal capacity can be queried in query state.
Example4 of querying second fault record is shown below:

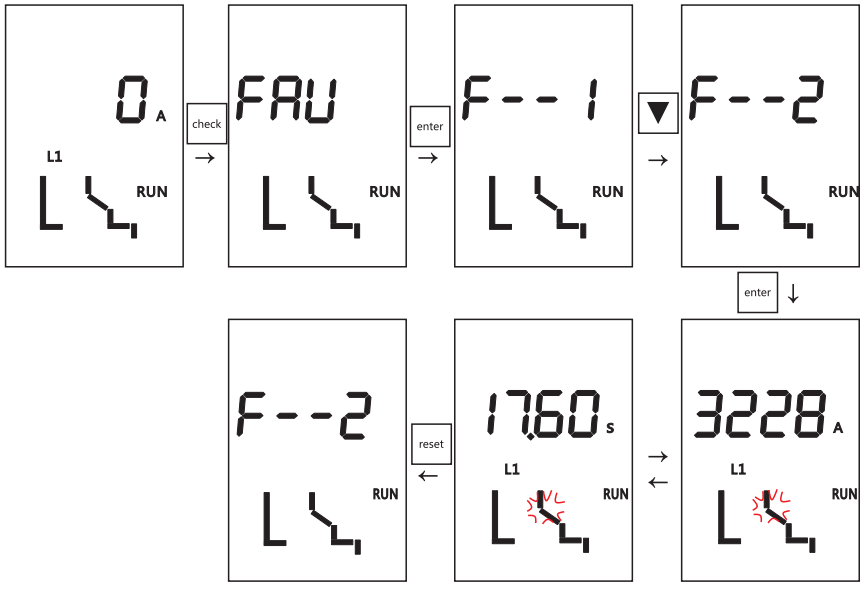

«Электро-Профи» - www.ep.ru

Example5 of querying first alarm record is shown below:

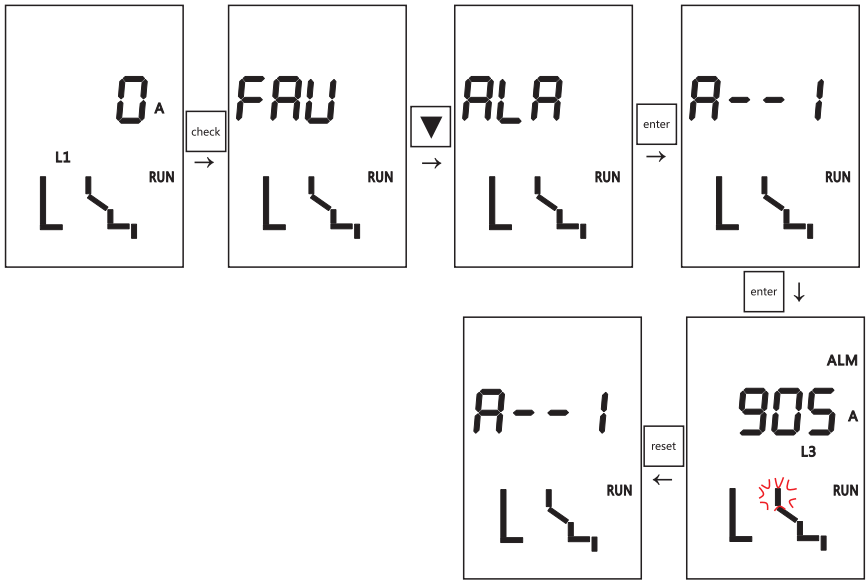

Example6 of querying breaker operation times and life record is shown below:

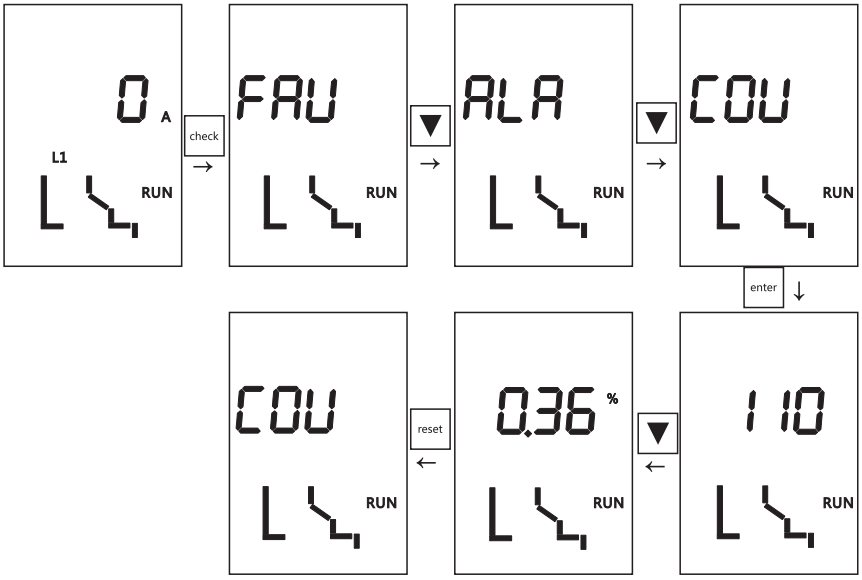

«Электро-Профи» - www.ep.ru

Example7 of querying thermal capacity after tripping is shown below:

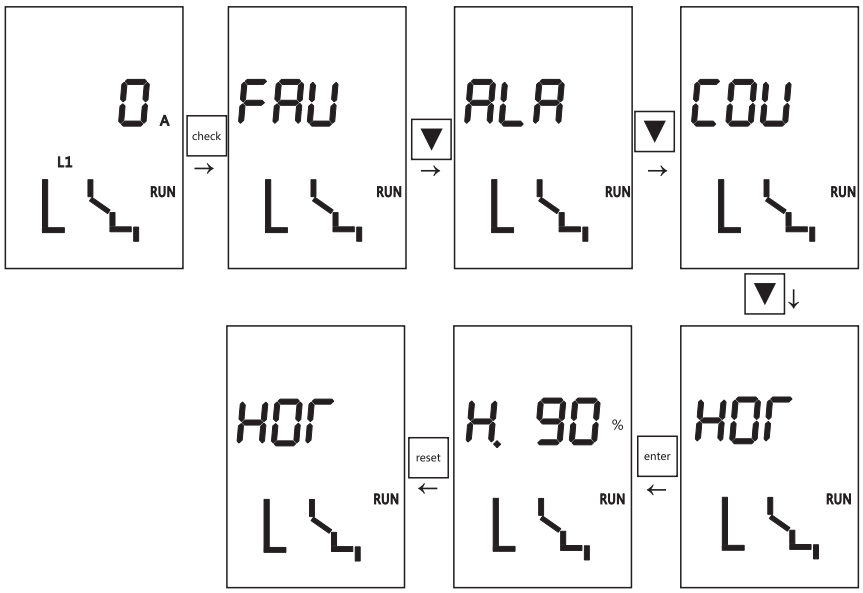

④Tripping state: "Reset" button should be press to return default interface after tripping at fault.

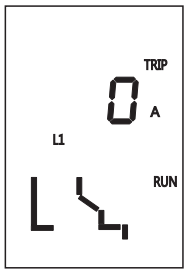

Press "Test" button to simulate Instantaneous trip

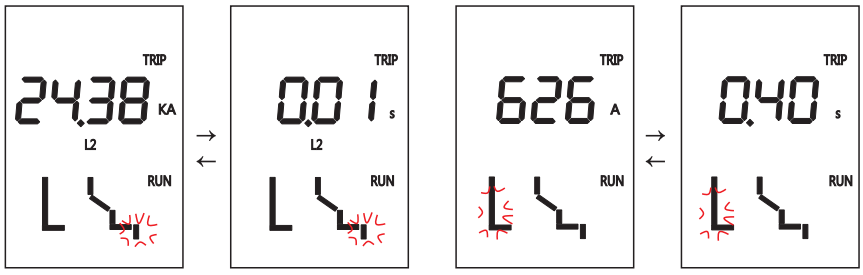

Instantaneous trip state

Earthing trip state

«Электро-Профи» - www.ep.ru

14.3.3 Controller functions list

M type	H type
1 over-current protection (overload, short delay, instantaneous, earthing); vector sum grounding mode. 2 Neutral line protection 3 Current measurement 4 two test functions: (1)Instantaneous trip test simulated by mechanical button (2)Other trip tests simulated by software 5 Ten fault records 6 Ten alarm records 7 MCR protection 8 operation times records 9 thermal capacity 10 overload pre-alarm	1 over-current protection (overload, short delay, instantaneous, earthing); vector sum grounding mode. 2 Neutral line protection 3 Current measurement 4 two test functions: (1)Instantaneous trip test simulated by mechanical button (2)Other trip tests simulated by software 5 Ten fault records 6 Ten alarm records 7 MCR protection 8 operation times records 9 thermal capacity 10 overload pre-alarm 11 communication function: MODBUS protocol 12 four DO function (optional)

3M type	3H type
1 all functions of M-type controller are included 2 HMI:128*64 LCD	1 all functions of 3M-type controller are included 2 voltage measurement and protection 3 frequency measurement and protection 4 power measurement and protection 5 electric energy, power-factor, harmonic measurement 6 communication function: MODBUS protocol 7 DI/DO function

14.4 specifications of characteristics

14.4.1 Over-current protection characteristic curve

Over-current protection characteristic curve

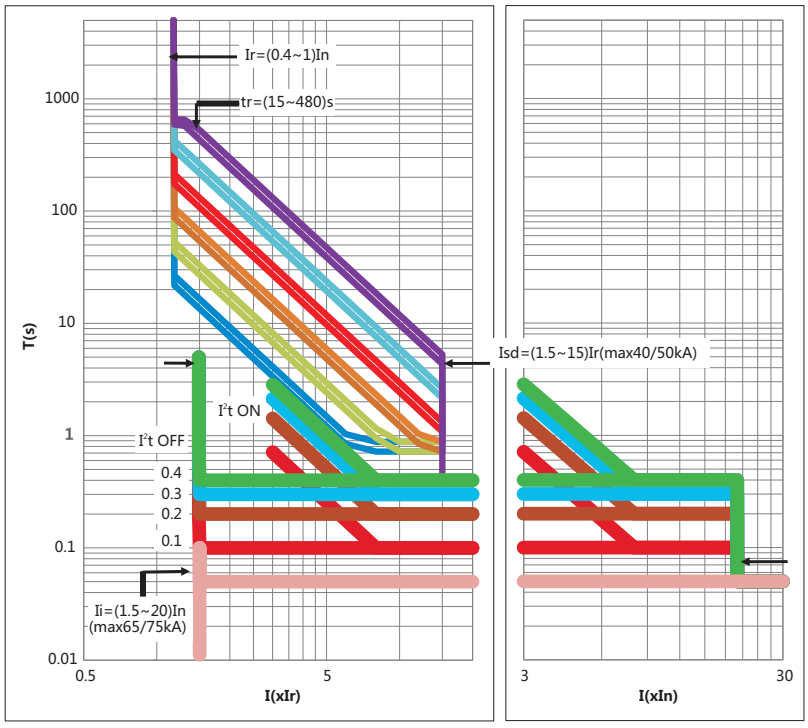

«Электро-Профи» - www.ep.ru

14.4.2 Overload long time-delay protection

Operating characteristics

Current Ratings Range(Ir)	tolerance	Current	Action time(s)						Time tolerance
(0.4~1)In+ OFF	±10%	≤1.05Ir	>2h Non-trip						
		> 1.3Ir	<1h trip						
		1.5Ir(setting time)	15	30	60	120	240	480	±10%
		2.0Ir	8.4	16.9	33.7	67.5	135	270	±10%
Phase N Overload and Over-Current Characteristic			100% or 50%(Applicable to 3P+N or 4P)						

14.3 Short-circuit short-delay protection

Short-circuit short delay protection has two protection modes. One is inverse time and definite time protection. $I^2Tsd = (8Ir)^2tsd$ works when current is low. In this formula, I is actual current, Tsd is actual trip time, tsd is set trip delay time. When I is over inverse time set value but below 8Ir, controller will operate according to over-current protection characteristic curve. When I is over both of inverse time set value and 8Ir, controller will operate according to definite time protection. The other is definite time protection and set time is 0.11s, 0.21s, 0.31s, and 0.41s. When I is over Isd but below Ii, controller will operate according to definite time protection.

Operating characteristics

Current Ratings Range(Isd)	tolerance	Current	Action time(s)				Time tolerance
(1.5~15)Ir+ OFF	±10%	≤0.9Isd	In the 2tsd Non-trip				
		> 1.1Isd	In the 2tsd Delayed-trip				
		tsd	0.1	0.2	0.3	0.4	±15%
		Returnable time	0.06	0.14	0.25	0.33	±15%

Note: a. When the intelligent controller is FrameⅡ (Inm=3200A、4000A), Isd shouldn' t be more than 40KA.
b. When the intelligent controller is FrameⅢ (Inm=6300), Isd shouldn' t be more than 50KA.
c. When tsd is 0.1s or 0.2s, time permissible error is ±0.040s.

14.4.4 Short-circuit instantaneous protection

Instantaneous protection trip time should be less than 100ms.

Operating characteristics

Current Ratings Range(Ii)	tolerance	Current	Time tolerance
(1.5~20)In+ OFF	±15%	≤0.85Ii	In the 0.2s Non-trip
		> 1.15Ii	In the 0.2s trip

Note: a. When the intelligent controller is Frame Ⅰ (Inm=2000A), Ii shouldn' t be more than 50KA.
b. When the intelligent controller is FrameⅡ (Inm=3200A、4000A), Ii shouldn' t be more than 65KA.
c. When the intelligent controller is FrameⅢ (Inm=6300), Ii shouldn' t be more than 75KA.

«Электро-Профи» - www.ep.ru

14.4.5 Earthing protection

Earthing protection has definite time characteristic. Fault delay time is shown below.

Earthing protection characteristic curve

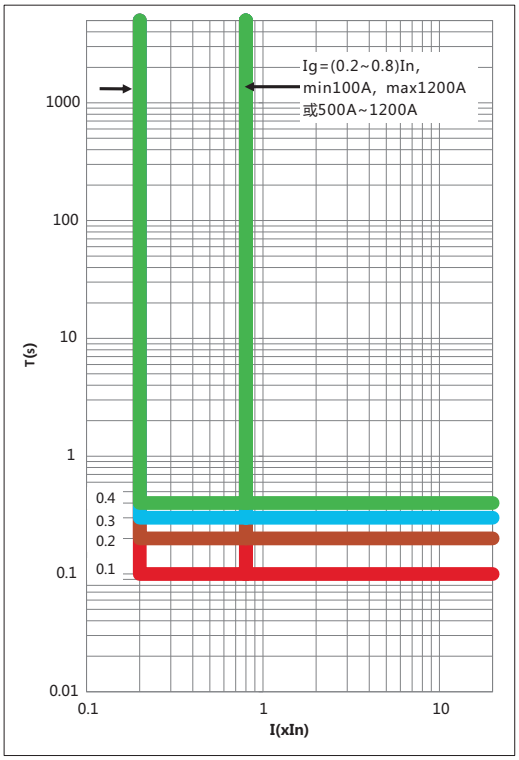

Operating characteristics of single-phase earthing protection

Current Ratings Range(Ig)	tolerance	Current	Action time(s)				Time tolerance
Inm=1000/2000 , (0.2~0.8)In+ OFF Inm=3200/4000/6300, (500~1200)A+ OFF	±10%	≤0.9Ig	In the 2tg Non-tripping				
		> 1.1Ig	In the tg±0.032s or tg(1±25%) Tripping				
		tg	0.1	0.2	0.3	0.4	±15%
		Returnable time	0.06	0.14	0.25	0.33	±15%

Note: a. When tg is 0.1s or 0.2s, time permissible error is ±0.040s;
b. When Inm is 1000A, Ig should be more than 100A. When Inm is 2000A, Ig shouldn' t be more than 1200A.
c. When Inm is 3200A, 4000A or 6300A, Ig should be between 500A and 1200A.

Single-phase protection is usually used in neutral-point solid ground system. Controller has two different protection modes, being vector sum mode and external transformer mode.

In three-phase three-wire system using 3-pole breaker without external transformer, earthing fault signal comes from three- phase current vector sum. Operating characteristic is definite time protection.

3PT mode

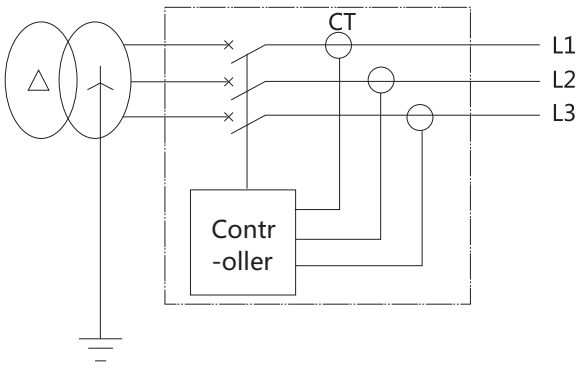

«Электро-Профи» - www.ep.ru

In three-phase four-wire system using 4-pole breaker without external transformer , earthing fault signal comes from three- phase current and N-Pole current vector sum. Operating characteristic is definite time protection.

4PT mode

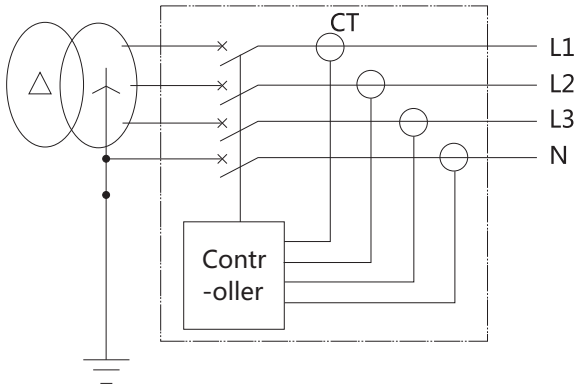

In three-phase four-wire system using 3-pole breaker with external N-pole transformer, earthing fault signal comes from three- phase and N-Pole current vector sum. Operating characteristic is definite time protection.

(3P+N)T mode

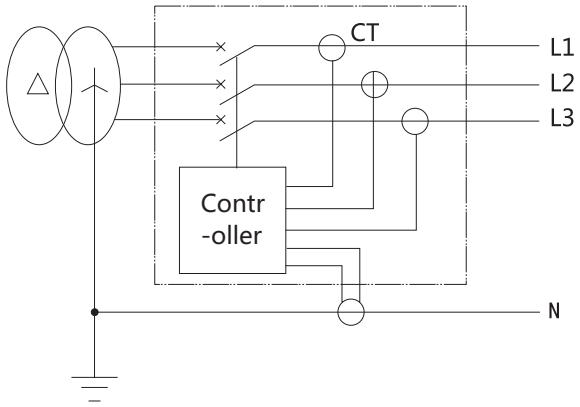

Note:

① External N-pole transformer (connected to 6#, 7# terminal for NA1-1000, connected to 25#, 26# terminal for NA1-2000-6300) is a special product. Default lead wire is 2 meters long.

② Earthing protection in 3PT mode can only be used in balance load. It should be turned off or set value above allowable unbalance current when the load is unbalance or the controller may operate.

③ The distance between external transformer and breaker should be less than 5m in (3P+N)T mode. When lead wire of external transformer needs to be longer than 2 meters, special requirement should be noted when ordering.

15. Accessories

15.1 Under-voltage release

Without power supply, under-voltage release can't close.

It is classified into instantaneous and time-delay type.

Delay time 1s, 3s, 5s, 7s are fixed for NA1-1000; 1s, 3s, 5s are fixed for NA1-2000, 3200, 4000, 6300.

Within 1/2 time-delay range, circuit breaker does not trip when power voltage recovers and exceeds 85%Ue.

Characteristic





Type	NA1-1000X	NA1-2000X/NA1-2000XN/NA1-2000XH/NA1-3200X/NA1-3200XN/NA1-4000X/NA1-6300X/NA1-6300XN	
Rated control power voltage Us(V)	**AC230, 400**	**AC400, 230, 127**	**DC220, 110**
Action voltage(V)	(0.35-0.7)Us		
Reliable making voltage(V)	(0.85-1.1)Us		
Reliable non-making voltage(V)	≤0.35Us		
Power loss(W)	20VA	48VA	48W

Optional configure: Auto suction type under-voltage release, and this device can substitute normal one, it can prevent mechanism form misoperation.

Make sure there is power supply on the under-voltage release, before making the circuit breaker.

«Электро-Профи» - www.ep.ru

15.2 Shunt release

Shunt release can realize the remote control to break the circuit breaker.

Characteristic





Type	NA1-1000X		NA1-2000X/NA1-2000XN/NA1-2000XH/NA1-3200X/NA1-3200XN/NA1-4000X/NA1-6300X/NA1-6300XN		
Rated control power voltage Us(V)	AC230, 400	DC220, 110	AC400, 230, 127	DC220, 110	
Work voltage	(0.7-1.1)Us				
Power loss	56VA	250W	300VA	132W	70W
Breaking time	(50±10)ms	(50±10)ms	(30~50)ms	(30~50)ms	

Forbid making the power for long time to avoid the shunt release being damaged.

15.3 Closing electromagnet

After the motor finishing the energy storage, closing release can instantly close the circuit breaker.

Characteristic





Type	NA1-1000X		NA1-2000X/NA1-2000XN/NA1-2000XH/NA1-3200X/NA1-3200XN/NA1-4000X/NA1-6300X/NA1-6300XN		
Rated control power voltage Us(V)	AC230, 400	DC220, 110	AC400, 230, 127	DC220, 110	
Work voltage	(0.85-1.1)Us				
Power loss (W)	56VA	250W	300VA	132W	70W
Closing time	(50±10)ms	(50±10)ms	≤70ms	≤70ms	

Forbid making the power for long time to avoid the closing release being damaged.

15.4 Motor-driven energy-storage mechanism

With the function of motor-driven energy storing and auto restoring energy after closing the circuit breaker, the mechanism can ensure closing the circuit breaker instantly after breaking the circuit breaker.

Manual energy-store is available.

Characteristic





Type	NA1-1000X		NA1-2000X/NA1-2000XN/NA1-2000XH/NA1-3200X/NA1-3200XN/NA1-4000X/NA1-6300X/NA1-6300XN	
Rated control power voltage Us(V)	AC230, 400	DC220, 110	AC400, 230, 127	DC220, 110
Work voltage	(0.85-1.1)Us			
Power loss (W)	90W	90W	85/110/150W	85/110/150W
Closing time	≤5s	≤5s	≤5s	≤5s
Energy-storage time				
Operation frequency				

«Электро-Профи» - www.ep.ru

15.5 Auxiliary contact NO

Standard model: 4NO(normal open)/4NC(normal close) and 6NC(normal close).

Characteristic





Type	NA1-1000X			NA1-2000X/NA1-2000XN/NA1-2000XH/NA1-3200X/NA1-3200XN/NA1-4000X/NA1-6300X/NA1-6300XN		
Rated voltage (V)	AC230	AC400	DC220	AC230	AC400	DC220
conventional free-air thermal current Ith (A)	10	6	0.5	6	6	6
Rated control capacity	300VA	100VA	60W	300VA	300VA	60W

NA1-1000X			NA1-2000X/NA1-2000XN/NA1-2000XH/NA1-3200X/NA1-3200XN/NA1-4000X/NA1-6300X/NA1-6300XN		
Category	Voltage	Current	Category	Voltage	Current
AC-15	AC230V	1.3A	AC-15	AC230V	1.3A
	AC400V	0.25A		AC400V	0.75A
DC-13	DC110V	0.55A	DC-13	DC110V	0.55A
	DC220V	0.27A		DC220V	0.27A

15.6 Doorcase

Installed on the door of the distribution cubicle, for sealing the distribution cubicle and making the protection class to IP40(fixed type and drawout type).

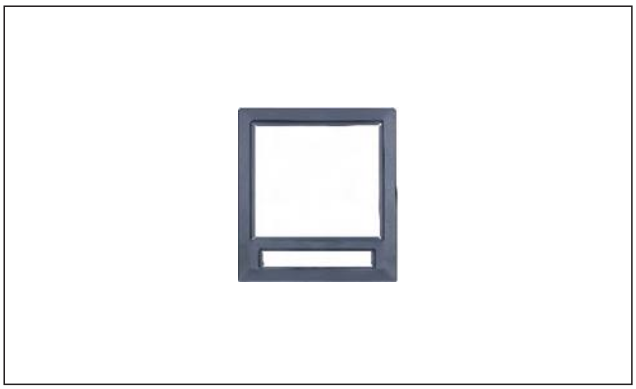

15.7 Phases barrier (Optional)

Installed between the busbars to increase the creepage distance.

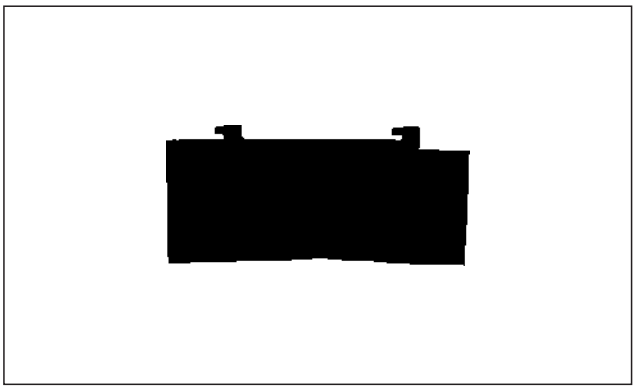

15.8 Transparent shield (NA1-2000) (Optional)

Installed on the doorcase of the cubicle's small door, make the protection class to IP54. It is suitable for the fixed, drawout type circuit breaker and the load switch.



«Электро-Профи» - www.ep.ru

15.9 Off position locking mechanism

When the circuit breaker is disconnected, padlock can be used to lock it after pulling out the lock lever, then the circuit breaker can't be "Test" or "connected" position.(Padlock is prepared by users)

15.10 Key lock

Lock the circuit breaker on the OFF position, then the circuit breaker can't be closed.

Locks and keys will be provided by us.

Separate lock and key is matched with one set of the circuit breaker.

Three same locks and two same keys are matched with three circuit breaker.

Note: Before pulling out the key, the break pushbutton should be pressed first, rotate the key anticlockwise, then pull it out.

★ NA1Install the locking system

1. Components of the locking system:



2. Installation sequence:

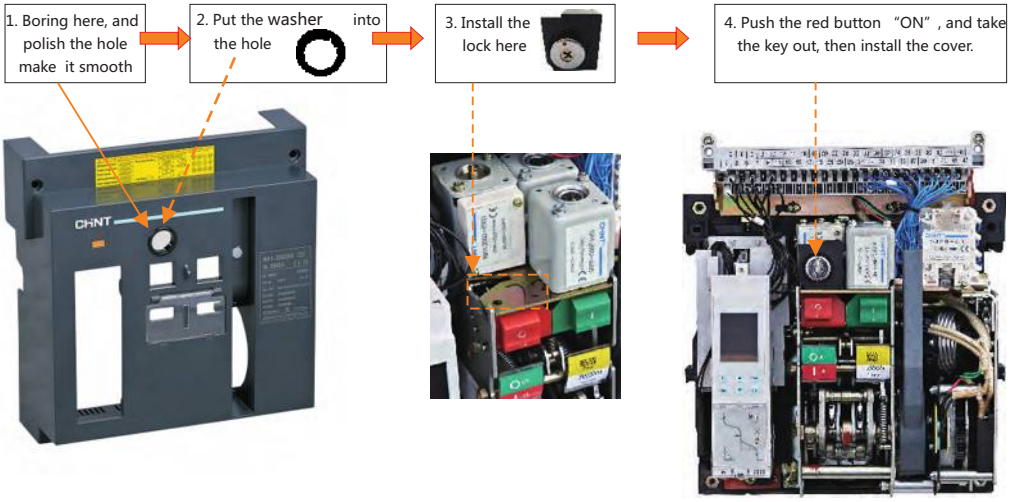

15.11 Cable mechanical interlock

It can realize the interlock of two horizontal or vertical-installed, three poles or four poles , drawout type or fixed type circuit breaker.

a. If need bend the cable, make sure the radian is more than 120°.

b. Check and make sure enough lubricating oil of the cable.

c. The maximum distance between two interlock circuit breakers is 1.5m.





Circuit diagram

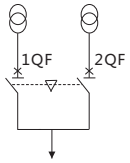

Available running manner

1QF	2QF
0	0
0	1
1	0

Notes: a. when the steel cable needs to be bent, enough transition arc should be reserved to guarantee flexible movement of steel cable;
b. check the steel cable and make sure there is enough lubricant in the steel cable to guarantee flexible movement of steel cable.

«Электро-Профи» - www.ep.ru

15.12 Connecting-rod type mechanical interlock

Two vertical-installed three-poles or four-poles, drawout-type or fixed type circuit breakers realize the interlock between one breaker with another two different-state breakers.

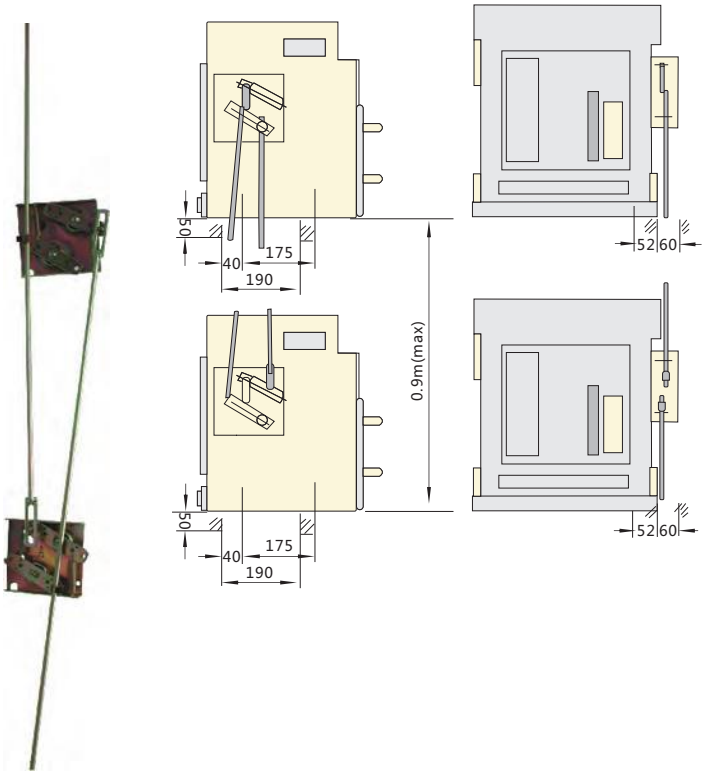

Circuit diagram	Available running manner

Manner 1: three power supplies are provided for one circuit breaker only

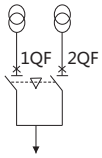

1QF	2QF
0	0
0	1
1	0

C

«Электро-Профи» - www.ep.ru

16. Maintenance and Overhaul of Circuit Breaker

Safety Precautions

The following operations must be executed in turn before conducting the maintenance or overhaul of circuit breakers:

a. Circuit breaker opening operation to ensure the circuit breaker is in an opening state;

b. Disconnecting the upper-level knife switch (if any) to ensure the main circuit and secondary circuit are uncharged;

c. Circuit breaker discharging, opening operation to ensure the circuit breaker is in a discharging and opening state;

d. The components which the personnel might contact must be uncharged.



Keep Safe

Maintenance and overhaul cycle

Condition	Environment	Maintenance cycle	Overhaul cycle	Remarks
General environment	The air should be always kept clean and dry. There is no corrosive gas. The temperature is in between -5℃~+40℃ The humidity should conform to Specification 1.3 Operating Conditions c Requirement for extreme atmosphere conditions.	Every six months	Once per year (every six months for more than 3 years of mounting period)	Confirming to IEC60947-2 Requirement for general environmental conditions.
Severe environment	Low temperature -5℃~-40℃ or high temperature 40℃ ~ 65℃ or humidity≥90%	Every three months	Every six months (every three months for more than 3 years of mounting period)	
	Places with more dust and corrosive gases	Every month	Every three months	

16.1 Maintenance of circuit breaker

16.1.1 Foreign objects (such as tools, wire leads or fragments, metal objects) in the switchgear should be regularly cleared.

16.1.2 The dust on the circuit breaker must be regularly cleared to maintain its good insulation.

16.1.3 The spring washers of the main circuit connecting bolts , the earthing bolts must be checked for whether they are flattened and theconnection is firm.



16.1.4 Whether the opening or closing indication is correct and reliable.

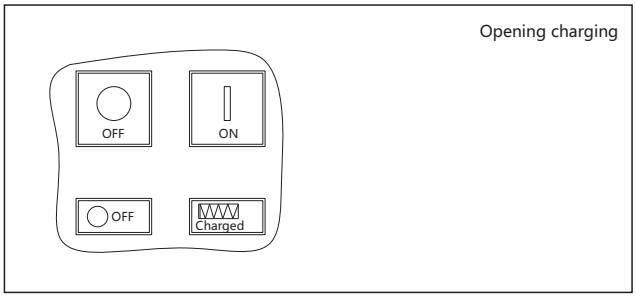

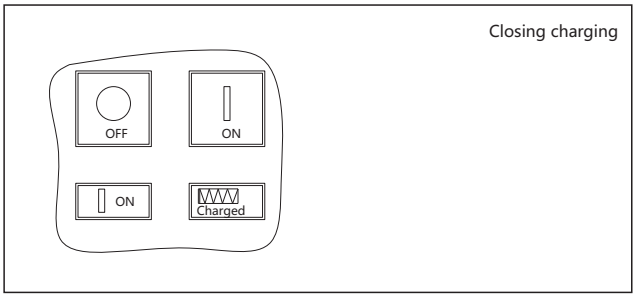

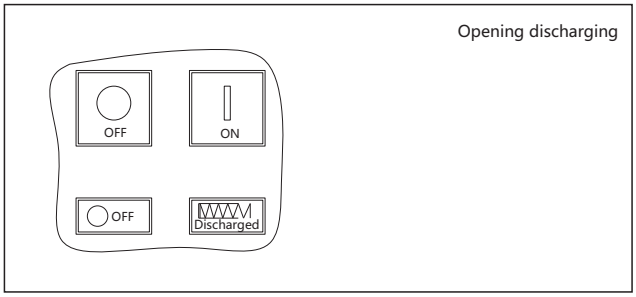

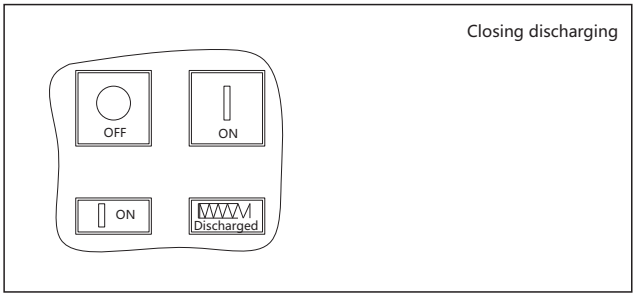

«Электро-Профи» - www.ep.ru

16.2 Overhaul of circuit breaker

16.2.1 Connecting and mounting inspection

It is proposed to refer to the following requirement for the torsional forces of main circuit and secondary circuit.

Fastener specification	Torque requirement N·m
M3	0.5~0.7
M4	1.2~1.7
M8	16~26
M10	36~52
M12	61~94

C

16.2.2 Insulating property test

The phase-phase and phase-earth insulation resistance, requirement≥20MΩ.

The insulation resistance test must be first done after overhaul and long-time（≥7days）of deenergization and before energization again.

16.2.3 Operating characteristic inspection

All accessories shall be connected with corresponding rated voltage according to the face shield nameplate requirement, and the following operations should be done:

Electric charging, closing and opening operation, 5times in cycle

Manual charging, closing and opening operation, 5times in cycle

The circuit breaker charging, opening and closing should be normal.

Note: The main circuit must be uncharged. If there is an under-voltage release, the rated voltage must be first connected.





Note: The picture takes NA1-2000X as an example

«Электро-Профи» - www.ep.ru

16.2.4 Inspection of circuit breaker components

16.2.4.1 Face shield dismantling

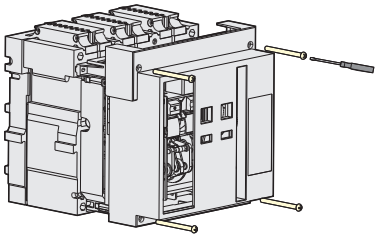

- Remove four bolts of circuit breaker fixed panel and take off the face shield.

Note: The picture takes NA1-2000X as an example.

16.2.4.2 Operating mechanism inspection

The mechanism components should be free of fracture and damage, and the fasteners are fastened.

Clear the dust and evenly apply oil onto the rotating components.

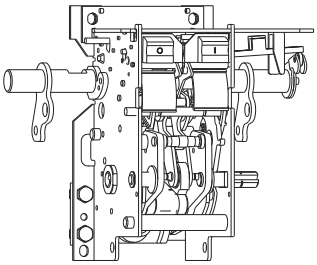

- Evenly apply 7012 low-temperature lubricating grease or lubricate same using the similar solid grease onto the mechanism rotating positions.

Note: The picture takes NA1-2000X as an example.

16.2.4.3 Intelligent controller (taking NA1-2000 type M type controller as an example)

Parameter setting should conform to the site use requirement.



Simulated test tripping function

- 1. Press the "Set" button to enter the parameter setting interface "Pro".
- 2. Press the "Enter" button to enter the protective parameter setting and query interface.
- 3. Press the "▲" or "▼" button to in turn select the display of protective parameter setting details.
- 4. Press the "Reset" button to return to the upper-level menu or exit from the interface.

«Электро-Профи» - www.ep.ru



• Press the "Test" button to simulate the tripping test.



• Press the orange "Reset" button on the face shield to return to normal state.

16.2.4.4 Drawer set inspection (conduct the test after removing the body, taking NA1-2000X as an example)
There are no foreign objects inside.

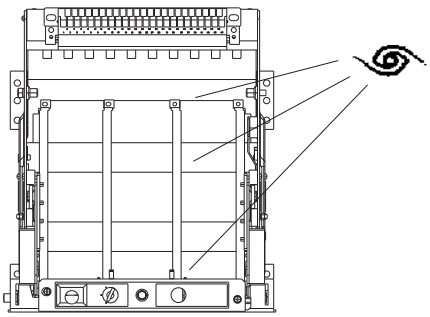

• Observe whether there are foreign objects inside the draw-out socket, like screws, wire leads, scrap iron; please clear same if any.

«Электро-Профи» - www.ep.ru

The flash barrier opening or closing is normal, and the spacing contact has no deformation or oxidization.

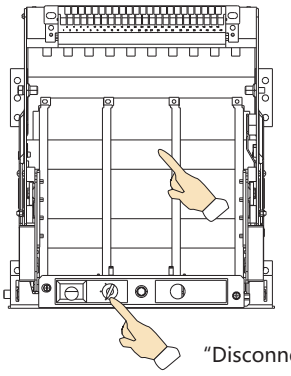

"Disconnected"

• Rotate to the "Disconnected" position, and the flash barrier is shown as the left figure.

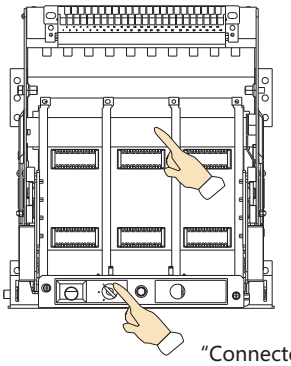

"Connected"

• Rotate NA1-2000X~6300X to the Connected position.
• Press down NA1-1000X separator and open the connecting rod. The flash barrier is shown as the left figure. Observe whether each phase bridge contacts are deformed, misplaced or oxidized. If any, replace same.

Rotate the friction positions and apply oil evenly.

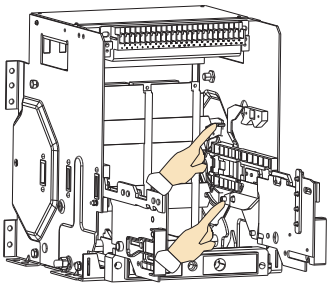

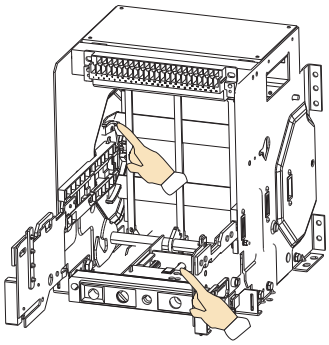

• Evenly apply 7012 low-temperature lubricating grease or similar solid grease onto the positions indicated in the left figure.

16.2.4.5 Arcing Chamber (taking NA1-2000X~6300X as an example)

Each arc and arcing chambers are not broken. If any, please promptly replace same and clear inside dust, corrosion layer and arc discharge point. In case of serious corrosion or rust, please promptly conduct replacement.

Note: Inspection must be done after short-circuit current breaking.

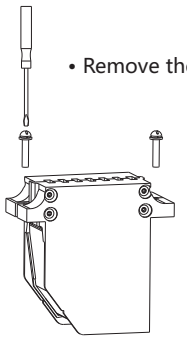

• Remove the fixing bolts

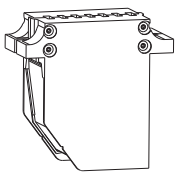

• Take out the arc chamber.

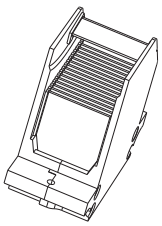

• Check chamber conditions.

«Электро-Профи» - www.ep.ru

16.2.4.6 Required main contact (taking NA1-2000X~6300X as an example) over-travel≥2mm.

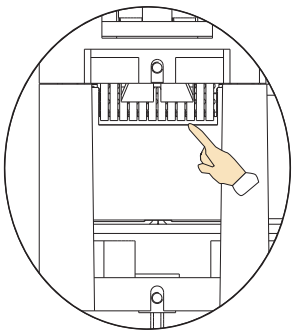

• Conduct manual closing operation, and observe the main contact over-travel.

Note: Please replace the contact if it reaches the position shown.

Clear dust, corrosion layer and particle burnt objects.

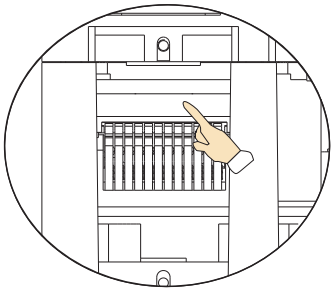

• Close the product and main contact is at the shown position. Observe any dust, particle burnt objects and oxidized corrosion layer of dynamic and static contacts. If any, please promptly clear same.

Note: Inspection must be done after short-circuit current breaking.

16.2.4.7 Secondary circuit inspection

No shell damage.

Inspect the contact between the draw-out body secondary circuitand drawer set secondary circuit using the multimeter. At the "Test" or "Connection" position, the contacts are in good contact , and the connecting screws are fastened , and the conductor insulation has no damage.



16.3 Replacement of undervoltage release, shunt release and closed electromagnet accessories. The following operations must be executed before replacing the accessories.

Cut off all power supplies and ensure the main circuit and secondary circuit power supplies are uncharged. The circuit breakers are in the discharging opening state.

16.3.1 Replacement of fixed accessories

Remove the panel fixing bolts and dismantle the panel.

Untie the tape and remove the connecting conductor.

Remove the fixed accessory mounting screws.

Dismantle the accessories and replace same.



Note: The shunt release should be first dismantled before replacing the NA1-2000 undervoltage release.

«Электро-Профи» - www.ep.ru

16.3.2 Replacement of draw-out accessories

Rotate the body to the detachment position and remove the body.

Remove the panel fixing bolts and dismantle the panel.

Untie the tape and remove the connecting conductor.

Remove the fixed accessory mounting screws.

Dismantle the accessories and replace same.

Note: The shunt release should be first dismantled before replacing the NA1-2000 undervoltage release.

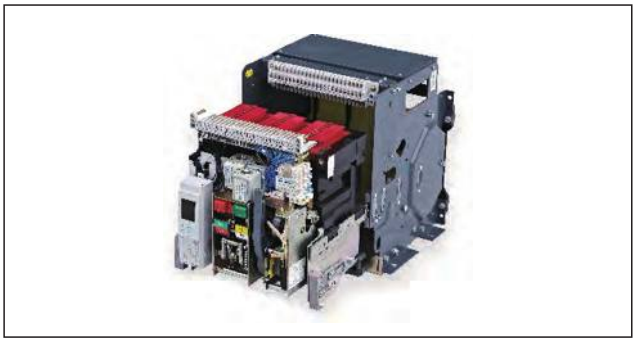

17. Common Failure Causes and Solutions

17.1 Troubleshooting logic

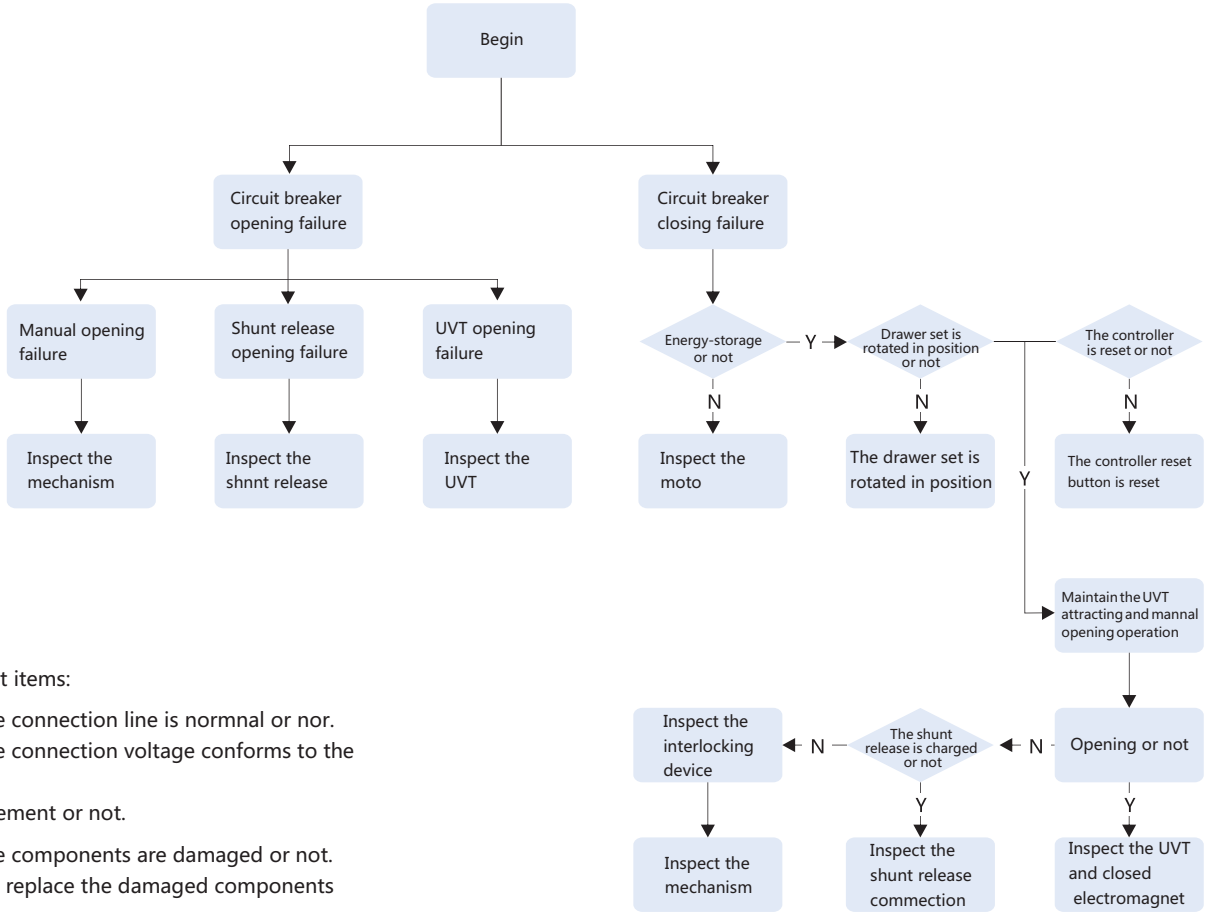

Inspect items:

1、The connection line is normnal or nor.

2、The connection voltage conforms to the

requirement or not.

3、The components are damaged or not.

please replace the damaged components

«Электро-Профи» - www.ep.ru

17.2 Faulty tripping analysis (taking NA1-2000X M as an example)

Failure cause identification

The failures are identified through the intelligent controller indication..



• Presss the "Reset" button till it returns to the default display interface.



• Press the "Check" button to enter the query menu interface; Press the "Enter" button to enter the failure query menu interface; press the "▼" and select the failure record frequency to be viewed, and press the "Enter" button again to query the failure details.



• Presss the "Reset" button to exit from or return to the upper-level menu.

Note: The electrical closing operation is forbidden before troubleshooting.

C

«Электро-Профи» - www.ep.ru

18. Regular malfunction and solutions

Fault description	Reasons analysis	Maintenance method
Tripping of circuit breaker	Over load tripping (Ir indicator flashing)	1. Check the breaking current value and operation time of intelligent release. 2. Analyze the load and electric network, exclude the overload if it happens. 3. Match the actual operating current with long time-delay current setting value. 4. Press the reset button to reclose the breaker
	Short circuit tripping ("Isd" or "Ii" indicator flashing)	1. Check the breaking current value and operation time of intelligent release. 2. Exclude the short circuit fault if it happens 3. Check the setting value of intelligent release 4. Check the normal state of breaker 5. Press the reset button to reclose the breaker
	Earthing fault tripping (IG indicator flashing)	1. Check the breaking current value and acting time of intelligent release. 2. Exclude the earthing fault if that happens. 3. Match the fault current setting value with the actual protection. 4. Press the reset button to reclose the breaker.
	Under-voltage release fault: 1. Rated working voltage is less than 70%Ue 2. Fault of control unit	1.Check the power is on or not 2.Check the power voltage of under-voltage release, it shouldn't be less than 85%Ue. 3.Replace the control unit of under-voltage release
	Mechanical interlock acting	Check the working state of two circuit breakers fixed with mechanical interlock
The breaker can't be closed	Intelligent release don't reset (panel is raised)	Press the reset button to reclose the breaker
	Secondary circuit of drawerout-type breaker isn't connected	Make the breaker to "making" position ("click" sound will be heard)
	Breaker hasn't stored energy	Check the secondary circuit: 1. Power voltage of motor shouldn't less than 85%Ue. 2. Check the storage mechanism, replace it if necessary.
The breaker can't be closed	Mechanical interlock acting leads to locking of breaker	Check the working state of two circuit breakers fixed with mechanical interlock
	Closing electromagnet: 1.Rated control voltage is less than 85%Us; 2.Closing electromagnet is damaged	1. Power voltage of closing electromagnet shouldn't less than 85%Us. 2. Replace the electromagnet.
Tripping after closing the circuit breaker (Fault indicator flashing)	Tripping immediately: 1. Short circuit current is closed 2.Delay tripping because of transient current is high when closing; 3. Overload current is closed	1. Check the breaking current value and operation time of intelligent release; 2. Exclude the short circuit fault if it happens; 3. Exclude overload fault 4. Check the normal state of breaker 5. Modify the current setting value of intelligent release 6. Press the reset button to reclose the breaker
Circuit breaker can't be opened	The breaker can't be opened manually 1. There is fault with mechanical operating mechanism	1. Check the mechanism, if there is fault happened.
	The breaker can't be opened by motor remotely 1. There is fault with mechanical operating mechanism 2. Power voltage of shunt release is less than 70%Us; 3. Shunt release is damaged	1. Check the mechanism, if there is fault happened. 2. Check the Power voltage of shunt release is less than 70%Us or not 3. Replace shunt release

«Электро-Профи» - www.ep.ru

Fault description	Reasons analysis	Maintenance method
Circuit breaker can't store energy	Manual storage can't be realized	Mechanical fault with the energy-storage device
	Motor storage can't be realized 1. Power voltage of motor energy-stored device is less than 85%Us; 2. There is mechanical fault with energy-storage device	1. Power voltage of motor energy-stored device shouldn't less than 85%Us 2. Mechanical fault with the energy-storage device
Handle of drawerout-type circuit breaker can't be drawn in or out	1. There is padlock at the "opening" position 2. Slideway or breaker body isn't pulled into its position	1. Take away the padlock 2. Pull the slideway or breaker body into its position
Drawerout-type breaker can't be drawn out at the "opening" position	1. Handle isn't pulled out 2. Breaker is not totally at the "opening" position	1. Pull out the handle 2. Keep the circuit breaker totally at "opening" position
Drawerout-type breaker can't reach the "making" position	1. Something drop into the drawer base, and lock the mechanism or mechanism fault happens. 2. Breaker body not match with the frame -size rated current of drawer base	1. Check and clean the drawer base, or contact with manufacturer 2. Match the body with relevant drawer base
No display on intelligent release panel	1. Release isn't connected with power 2. There is fault with release	1. Check the power is connected or not 2. Cut off the power, then connect again. Otherwise contact with manufacturer
	Rated control voltage is less than 85%Us;	Check the electromagnet power voltage shouldn't be less than 85%Us.
Fault indicator still flashing after pressing the Reset button	Fault happened with intelligent release	Cut off the power, then connect again. Otherwise contact with manufacturer

C

«Электро-Профи» - www.ep.ru

NA1-1000X~6300X Ordering specification

Customer: Tel: Date:

Quantity:

Model		☐NA1-1000X	☐NA1-2000X ☐NA1-2000XN ☐NA1-2000XH	☐NA1-3200X ☐NA1-3200XN	NA1-4000X	☐NA1-6300X ☐NA1-6300XN
Rated current In (A)		☐200 ☐400 ☐630 ☐800 ☐1000	☐630 ☐800 ☐1000 ☐1250 ☐1600 ☐2000	☐2000 ☐2500 ☐3200	☐4000	☐4000 ☐5000 ☐6300(no four poles)
Installation mode		☐ Drawout type ☐Fixed type (Note: no fixed type when In> 4000A)				
Number of poles		☐ Three poles ☐Four poles				
Intelligent Controller		Protection function			Auxiliary functions	Optional function
	☐ M type Standard (Default configuration)	1. ☐ Ir overload long delay, Isd short-circuit short delay inverse time + definite time, Ii transient short-circuit, Ig single-phase grounding 4-section protection 2. ☐ Ir overload long delay, Isd definite time short-circuit short delay,Ii transient short-circuit, Ig single-phase grounding 4-section protection			1. Ammeter function 2. Self-diagnostic function 3. Tuning function 4. Test function 5 Display function	/
	☐ 3M type Multifunctional (Optional configuration)	1. ☐ Ir overload long delay, Isd short-circuit short delay inverse time + definite time, Ii transient short-circuit, Ig single-phase grounding 4-section protection 2. ☐ Ir overload long delay, Isd definite time short-circuit short delay,Ii transient short-circuit, Ig single-phase grounding 4-section protection				☐ Voltage display ☐ Frequency display ☐ Power Factor show ☐ Active power display ☐ Load monitoring function Note: For the specific optional function, refer to List of controller functions in the sample (The cost of optional functions will be calculated additionally).
	☐ 3H-type Communication type (Optional configuration)	1. ☐ Ir overload long delay Isd short-circuit short delay inverse time +definite time Ii transient short-circuit, Ig single-phase grounding 4-section protection 2. ☐ Ir overload long delay, Isd definite time short-circuit short delay, Ii transient short-circuit, Ig single-phase grounding 4-section protection 3. ☐ with PROFIBUS-DP communication protocol ☐ with MODBUS communication protocol				
	Notes: Protection function Settable range and conventional factory tuning	Ir long delay current setting range: (0.4 to 1) In Overload 1.5Ir action time setting range: 15,30,60 ..... 480s		! Conventional factory tuning: overload long delay 1.0In ! Conventional factory tuning: overload 1.5Ir; action 15s		
		Isd short delay current setting range: (1.5 to 15) Ir; short delay action time (0.1 ~ 0.4) s		! Conventional factory setting: short delay current 8Ir ; ! Conventional factory tuning: Short delay action time 0.4s [Note: 3M, 3H for (1.5 to 15) Ir]		
		Ii instantaneous current setting range: 1.5In ~ 50kA/65kA/75kA ! Conventional factory tuning: 12In [Note: 3M, 3H for (1.5In~50kA/65kA/75kA)]				
		Ig earthing protection current setting range: (0.2 to 0.8) In; the earthing protection time setting range: (0.1to0.4)s ! Conventional factory setting: 0.5 In; OFF				
	Controller power	☐AC380V,☐AC400V,☐AC220V,☐AC230V,☐AC127V,☐DC220V,☐DC110V				(Optional)
Electrical accessories	Undervoltage release (default configuration)	☐AC380V,☐AC400V,☐AC220V,☐AC230V,☐AC127V,☐Order____V ,☐Non-undervoltage				(Optional)
		☐ Instantaneous ☐ delay, s; ☐ Resistance capacity loss release delay (1,3,5) s, and optional non-adjustable				(Optional)
	Shunt release	☐AC380V,☐AC400V,☐AC220V,☐AC230V,☐AC127V,☐DC220V,☐DC110V				(Optional)
	Closing electromagnet	☐AC380V,☐AC400V,☐AC220V,☐AC230V,☐AC127V,☐DC220V,☐DC110V				(Optional)
	Electric motor	☐AC380V,☐AC400V,☐AC220V,☐AC230V,☐AC127V,☐DC220V,☐DC110V				(Optional)
Special requirements	Interlock device (surcharge)	Mechanical linkage: ☐ Link interlock ☐ Cable interlock Door interlock: ☐ Switch body position door interlock ☐ Switch on/off state door interlock (drawer-type)				(Optional)
	Accessories (surcharge)	Button lock: ☐Panel products on/off button lock Key lock: ☐1 lock 1 key ☐2 locks 1 key ☐3 locks 1 key ☐ 3 locks 2 keys ☐5 locks 3 keys ☐Special custom__lock__ key External transformer: ☐External N phase transformer [(3P+N)T type ☐External leakage zero sequence current transformer (E mode) ☐External ground current transformer (W) Module: ☐ PSU-1 Power module ☐RU-1 relay module ☐ST-DP protocol converting module ☐Position signaling devices (☐Connected ☐Test ☐Unconnected) ☐Mechanical counting device				(Optional)
	The main circuit connection	☐Horizontal connection (default) ☐Vertical connection (with L vertical bus-bar) ☐Rotation busbar horizontal connection (Drawer In ≤ 3200) ☐Rotation busbar vertical connection (drawer-type In ≤ 3200)				(Optional)

Note: The casing current, rated current and auxiliary control voltage must be specified when ordering!
Note: 1) Please mark "√" or fill figure in the relative " ☐" if no mark, we will provide according to conventional.
Note: 2) The operational fuction of the intellgent controller and special requirements require additional costs.

Tel.:0577-62877777-6213 Fax :0577-62877777-6288


NA1-6300X


NA1-4000X


NA1-3200X


NA1-2000X


NA1-1000X

«Электро-Профи» - www.ep.ru

Configuration instructions

1. NA1-2000X~6300X fundamental configurations
   a. Motor-driven:
   Under-voltage instantaneous release;
   Shunt release;
   Closing electromagnet;
   4 suits of transform contact;
   Motor driven operating mechanism;
   M-type Intelligent Controller;
   Horizontal wiring of main circuit;
   Doorcase;
   Element of main circuit;
   Operating instructions of M-type Intelligent Controller
   Operating instructions of Air Circuit Breaker;
   Packing box;
   Drawer seat (Drawout type)

   b. Manual:
   Under-voltage instantaneous release;
   4 suits of transform contact;
   M-type Intelligent Controller;
   Horizontal wiring of main circuit;
   Doorcase;
   Element of main circuit;
   Operating instructions of M-type Intelligent Controller
   Operating instructions of Air Circuit Breaker;
   Packing box;
   Drawer seat(Drawout type)

3. NA1-2000X~6300X operational configuration (additional costs)
   Nonadjustable under voltage delayed release (1s, 3s, 5s);
   Connecting-rod type mechanical interlock (for drawout type);
   Wire-cable mechanical interlock; Button lock; Key lock;
   Door interlock'Locking device;
   External current transformer earthing protection; Vertical busbar;
   Rotating busbar (IN≤3200);
   3NO (normal open) and 3NC (normal close) contacts;
   4NO and 4NC contacts; 5 groups changeover contacts;
   3 groups changeover contacts; H type intelligent controller;
   Position signal; Counter; Protecting cover (NA1-2000);
   Double power controller.

2. NA1-1000X fundamental configurations
   a. Motor-driven:
   Under-voltage instantaneous release;
   Shunt release;
   Closing electromagnet;
   Motor driven operating mechanism;
   4 normal open and 4 normal close auxiliary contacts;
   M-type Intelligent Controller;
   Closing and breaking push button lock;
   Horizontal wiring of main circuit;
   Doorcase;
   Element of main circuit;
   Operating instructions of Air Circuit Breaker;
   Packing box;
   Drawer seat(Drawout type)

   b. Manual:
   Under-voltage instantaneous release;
   4 normal open and 4 normal close auxiliary contacts;
   M-type Intelligent Controller;
   Horizontal wiring of main circuit;
   Closing and breaking push button lock;
   Doorcase;
   Element of main circuit;
   Operating instructions of Air Circuit Breaker;
   Packing box;
   Drawer seat(Drawout type)

4. NA1-1000X operational configuration (additional costs)
   Under voltage delayed release; wire-cable mechanical interlock;
   key lock; External current transformer earthing protection;
   Vertical busbar; 6 groups changeover contacts;
   H type intelligent controller; Phases barrier, position signal.

C

«Электро-Профи» - www.ep.ru

Motor Control and Protection

various for choice, same for reliability



«Электро-Профи» - www.ep.ru



«Электро-Профи» - www.ep.ru

CHINT ELECTRIC

Contactors, Relays, Starters

Contactors



NC8
AC Contactor
06-500A

Page P-001



NC7
AC Contactor
09-620A

Page P-036



NC6
AC Contactor
6~9A

Page P-052



NC1
AC Contactor
9~95A

Page P-055



NC1-2504Z(N) DP
NC1-4004Z(N) DP
Contactor

Page P-068



NC2
AC Contactor
115~800A

Page P-072



NCK3
Definite Purpose
Contactor
20~90A

Page P-083



NCK5
Definite Purpose
Contactor
20~40A

Page P-089



NC11
AC Contactor

Page P-093



NCH8
Modular AC
Contactor
20-63A

Page P-096



CJ19
for Power Factor
Correction

Page P-099

Relays



NR8
Thermal
Overload Relay

Page P-101



NRE8
Electronic
Overload Relay

Page P-105



NR2
Thermal
Overload Relay

Page P-111

Starters



NS2
Manual Motor
Starter

Page P-121



CC Conversion
Connectors

Page P-132



NQ2
Direct On-line
Starter

Page P-135



NQ3
DOL
Electromagnetic
Starter

Page P-140



NQB1
Series
Protection Starter

Page P-144



NKB1
Control & Protective
Switching Device

Page P-148



NTB1
Circuit-breaker for
Equipment

Page P-154

«Электро-Профи» - www.ep.ru

NC8 Series

Current range: 6~500A
(6A, 9A, 12A, 18A, 25A, 32A, 38A, 40A, 50A, 65A, 80A, 100A,115A,150A,170A, 205A, 265A, 300A, 400A, 500A)
Poles: 3P, 4P

3-pole contactor






Frame size (A)	6, 9, 12	9, 12, 18	25, 32, 38	40, 50, 65
	Mini type	Normal type		
Power (kW,400V)	2.2, 4, 5.5	4, 5.5, 7.5	11, 15, 18.5	18.5, 22, 30

4-pole contactor






«Электро-Профи» - www.ep.ru









D

80, 100	115,150,170	205, 265, 300	400, 500
37, 45	55, 75, 90	110, 132, 160	200, 250



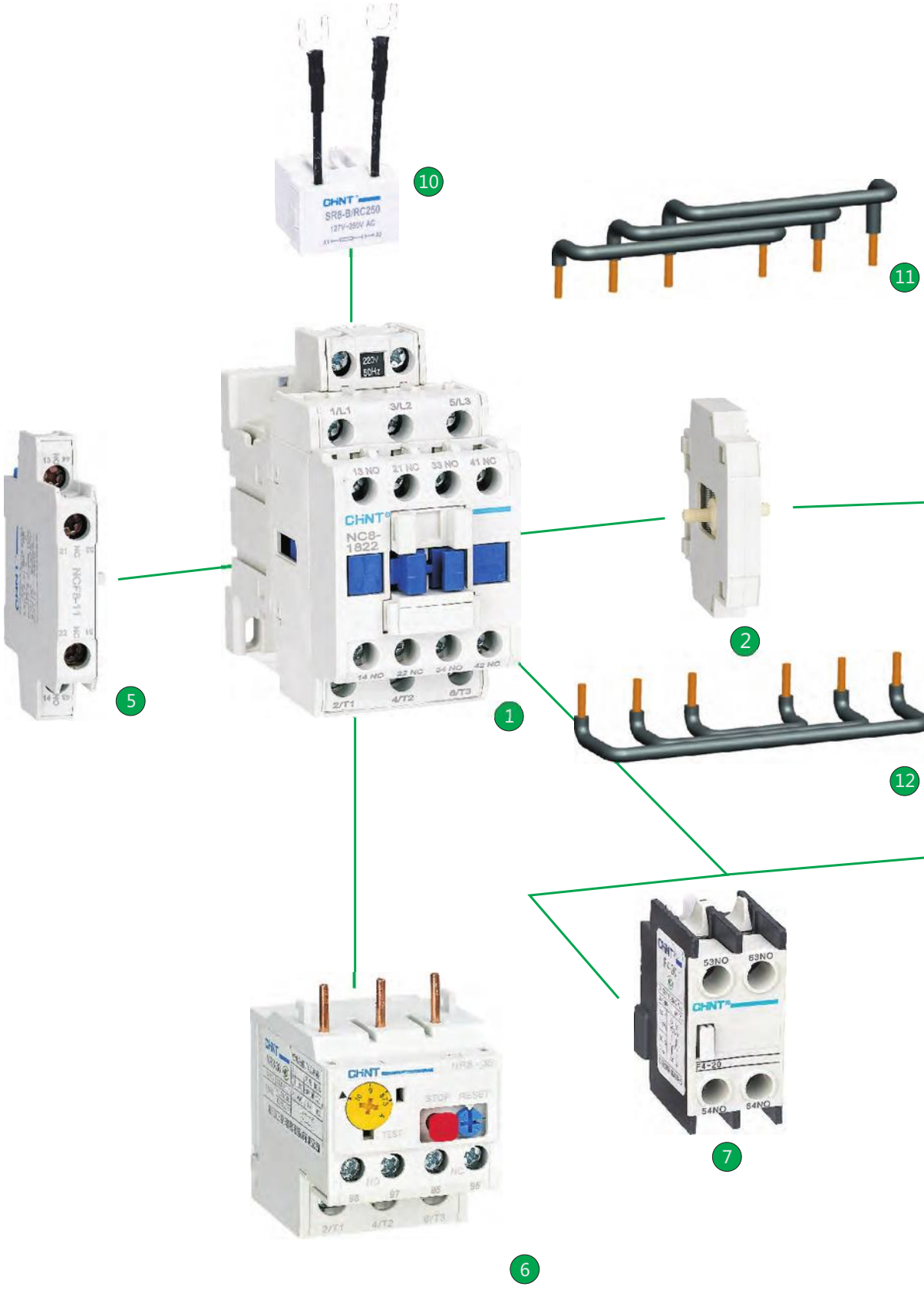
10
11
2
5
1
12
7
6

NC8 and Accessories

1. Contactor
2. Mechanical interlock block
3. Contactor
4. Side mount aux
5. Side mount aux
6. Thermal overload relay
7. Front mount aux
8. Front mount aux
9. Pneumatic timers
10. Surge arrester block
11. Bus bar
12. Bus bar

D



3



4



8



9



NC8 Series AC Contactor 06~500A

1. General

NC8 series AC contactor is applied to circuits with AC current frequency of 50 Hz or 60 Hz, rated operational voltage up to 690 V and rated operational current up to 500 A. It is used for remote making & breaking circuits, and can also be used with proper thermal overload relay together as an electromagnetic starter to protect circuits from overload.

Standard: IEC/EN 60947-4-1.

2. Operating conditions

2.1 Certificates: CE, KEMA, UL;

2.2 Electric ratings: AC 50/60Hz, up to 690V, up to 500A;

2.3 Application: remotely makes and breaks circuit;
protect circuit from overload assembling
with proper thermal relay;

2.4 Utilization category: AC-1, AC-3, AC-4;

2.5 Mounting conditions: inclination between
mounting plane and vertical plane not
exceed ±5°

2.6 NC8-06 (M) ~65 : IP20
NC8-80~170 : IP10
NC8-205~500 : IP00(IP20 front face with shrouds SHD)

3. Type designation

3-pole contactor

NC8 - 06 M 01 /Z /N

Combination
/ N: Reversing
None: Without additional device

Coil type
/ Z: DC operation coil
None: AC operation coil
/W:Wide voltage range operation coil
(only for 115~170A)

Auxiliary contact
Mini type (6A~12A): 01: 1NC; 10: 1NO
Normal type (9A~38A): None: 1NO+1NC; 22: 2NO+2NC
Normal type (40A~100A): None: 1NO+1NC;
Normal type (115A~500A): None: None

Contactor type
M: Mini type (6A~12A)
None: Normal type(9A~500A)

Nominal rating
06: 6A; 09: 9A; ... 500: 500A

NC8 series AC contactor

4-pole contactors

NC8 - 06 M /4 /Z /N

Combination
/ N: Reversing
None: Without additional device

Coil type
/ Z: DC operation coil
None: AC operation coil

Number of main contact
Mini type (6A~12A)
/ 4: 4NO; / 22: 2NO+2NC
Normal type (9A~38A)
/ 4: 4NO; /22: 2NO+2NC
Normal type (40A~100A)
/4: 4NO

Contactor type
M: Mini type (6A~12A)
None: Normal type(9A~100A)

Nominal rating
06: 6A; 09: 9A; ... 100: 100A

NC8 series AC contactor

«Электро-Профи» - www.ep.ru

Accessories

F4 - 20

Contacts
20: 2NO
11: 1NO+1NC
02: 2NC
40: 4NO
31: 3NO+1NC
22: 2NO+2NC
13: 1NO+3NC
04: 4NC

Auxiliary contact

F5 - T 0

Time-delay range
0: 0.1s~3s
2: 0.1s~30s
4: 10s~180s

Time-delay type
T: Making time-delay
D: Breaking time-delay

Auxiliary contact

F8 - 20

Contacts
20: 2NO
11:1NO+1NC
02: 2NC
40: 4NO
31: 3NO+1NC
22: 2NO+2NC
13: 1NO+3NC
04: 4NC

Auxiliary contact

NCF8 - 11 (for NC8 - 09~100),expect (40～100、DC)

Contacts
11: 1NO+1NC

Side auxiliary contact

NCF1 - 11C / B

None: Normal type: for 115A~170A
/B: for 205A~500A

Contacts
11: 1NO+1NC

Side auxiliary contact

SR8 - A / RV 48

Voltage protection scope
48: 24V~48V AC/DC
250: 110V~250V AC/DC (for RV type)
127V~250V AC (for RC type)
440: 380V~440V AC

Type of element
RV: Varistor
RC: Resistance + Capacitance

Matching contactor
A: for mini type
B: for normal 9A～38A
C: for normal 40A～100A，expect DC

Surge Arrester

NCL8 - A

A: for NC8-0 9～38
B: for NCB- 40～100，expect DC
C: for NC8-205～500

Mechanical interlocking

«Электро-Профи» - www.ep.ru

Quick selection table

Frame size		9A	12A	18A	25A	32A	38A
3-pole contactors							
Auxiliary contacts	1NO+1NC	NC8-09	NC8-12	NC8-18	NC8-25	NC8-32	NC8-38
	2NO+2NC	NC8-0922	NC8-1222	NC8-1822	NC8-2522	NC8-3222	NC8-3822

Ratings/IEC/EN 60947-4-1		kW	A	kW	A	kW	A	kW	A	kW	A	kW	A
AC-1			25		25		32		40		55		55
AC-3	220V/230V/240V	2.2	9	3	12	4	18	5.5	25	7.5	32	9	38
	380V/400V	4	9	5.5	12	7.5	18	11	25	15	32	18.5	38
	415V	4	9	5.5	12	9	18	11	25	15	32	18.5	38
	660V/690V	5.5	6.7	7.5	9	9	10.6	15	17.3	18.5	21.9	18.5	21.9

Ratings/UL508		hp	A	hp	A	hp	A	hp	A	hp	A	hp	A
Continuous current (FLA)			25		25		32		40		50		50
Single phase	110V/120V	0.5		0.75		1		1.5		2		2	
	230V/240V	1		2		3		3		5		5	
Three phases	200V/208V	3		3		5		7.5		10		10	
	230V/240V	3		3		5		7.5		10		10	
	460V/480V	5		7.5		10		15		20		20	
	575V/600V	7.5		10		15		20		25		25	

«Электро-Профи» - www.ep.ru

Frame size		40A	50A	65A	80A	100A	115A	150A	170A
3-pole contactors									
Auxiliary contacts	1NO+1NC	NC8-40	NC8-50	NC8-65	NC8-80	NC8-100	NC8-115	NC8-150	NC8-170

Ratings/IEC/EN 60947-4-1		kW	A	kW	A	kW	A	kW	A	kW	A	kW	A	kW	A	kW	A
AC-1			60		80		80		125		125		200		200		275
AC-3	220V/230V/240V	11	40	15	50	18.5	65	22	80	25	100	37	115	45	150	55	170
	380V/400V	18.5	40	22	50	30	65	37	80	45	100	55	115	75	150	90	170
	415V	22	40	25	50	37	65	45	80	45	100	59	115	80	150	100	170
	660V/690V	30	34	33	39	37	42	45	49	45	49	80	86	100	107	110	118

Ratings/UL508		hp	A	hp	A	hp	A	hp	A	hp	A	hp	A	hp	A	hp	A
Continuous current (FLA)			60		80		80		125		125		200		200		275
Single phase	110V/120V	3		5		5		7.5		10		10		15		15	
	230V/240V	5		7.5		10		20		20		25		30		30	
Three phases	200V/208V	10		15		20		30		30		40		50		60	
	230V/240V	10		15		20		30		30		40		60		60	
	460V/480V	30		40		50		60		60		100		125		150	
	575V/600V	30		40		50		60		60		100		125		150	

D

«Электро-Профи» - www.ep.ru

Frame size		**205A**	**265A**	**300A**	**400A**	**500A**
3-pole contactors						
Auxiliary contacts	2NO+2NC	NC8-205	NC8-265	NC8-300	NC8-400	NC8-500

Ratings/IEC/EN 60947-4-4		**kW**	**A**	**kW**	**A**	**kW**	**A**	**kW**	**A**	**kW**	**A**
AC-1			300		330		380		450		630
AC-3	220V/230V/240V	63	205	75	265	90	300	132	400	160	500
	380V/400V	110	205	132	265	160	300	200	400	250	500
	415V	110	205	140	265	160	300	220	400	280	500
	660V/690V	132	137	160	185	200	235	300	303	355	354

Ratings/UL508		**hp**	**A**	**hp**	**A**	**hp**	**A**	**hp**	**A**	**hp**	**A**
Continuous current (FLA)			300		330		380		450		630
Single phase	110V/120V	15		20		25		30		40	
	230V/240V	30		40		50		60		75	
Three phases	200V/208V	60		75		100		125		150	
	230V/240V	75		100		125		150		200	
	460V/480V	150		200		250		300		400	
	575V/600V	200		250		300		400		500	

«Электро-Профи» - www.ep.ru

Frame size		9A	12A	18A	25A	32A	38A
4-pole Contactors							
Auxiliary contacts	4NO	NC8-09/4	NC8-12/4	NC8-18/4	NC8-25/4	NC8-32/4	NC8-38/4
	2NO+2NC	NC8-09/22	NC8-12/22	NC8-18/22	NC8-25/22	NC8-32/22	NC8-38/22

Ratings/IEC/EN 60947-4-1		kW	A	kW	A	kW	A	kW	A	kW	A	kW	A
AC-1			25		25		32		40		55		55
AC-3	220V/230V/240V	2.2	9	3	12	4	18	5.5	25	7.5	32	9	38
	380V/400V	4	9	5.5	12	7.5	18	11	25	15	32	18.5	38
	415V	4	9	5.5	12	9	18	11	25	15	32	18.5	38
	660V/690V	5.5	6.7	7.5	9	9	10.6	15	17.3	18.5	21.9	18.5	21.9

Ratings/UL508		hp	A	hp	A	hp	A	hp	A	hp	A	hp	A
Continuous current (FLA)			25		25		32		40		50		50
Single phase	110V/120V	0.5		0.75		1		1.5		2		2	
	230V/240V	1		2		3		3		5		5	
Three phases	200V/208V	3		3		5		7.5		10		10	
	230V/240V	3		3		5		7.5		10		10	
	460V/480V	5		7.5		10		15		20		20	
	575V/600V	7.5		10		15		20		25		25	

D

«Электро-Профи» - www.ep.ru

Frame size		**40A**	**50A**	**65A**	**80A**	**100A**
4-pole contactors						
Auxiliary contacts	4NO	NC8-40/4	NC8-50/4	NC8-65/4	NC8-80/4	NC8-100/4

Ratings/IEC/EN 60947-4-1		**kW**	**A**	**kW**	**A**	**kW**	**A**	**kW**	**A**	**kW**	**A**
AC-1			60		80		80		125		125
AC-3	220V/230V/240V	11	40	15	50	18.5	65	22	80	25	100
	380V/400V	18.5	40	22	50	30	65	37	80	45	100
	415V	22	40	25	50	37	65	45	80	45	100
	660V/690V	30	34	33	39	37	42	45	49	45	49

Ratings/UL508		**hp**	**A**	**hp**	**A**	**hp**	**A**	**hp**	**A**	**hp**	**A**
Continuous current (FLA)			60		80		80		125		125
Single phase	110V/120V	3		5		5		7.5		10	
	230V/240V	5		7.5		10		20		20	
Three phases	200V/208V	10		15		20		30		30	
	230V/240V	10		15		20		30		30	
	460V/480V	30		40		50		60		60	
	575V/600V	30		40		50		60		60	

«Электро-Профи» - www.ep.ru

Frame size	9A	12A	18A	25A	32A	38A
Contactors	 3-pole		 4-pole	 3-pole		 4-pole

Auxiliary contact block	 F4 4-pole Front mount	Contacts aux	4NO	F4-40
			3NO+1NC	F4-31
			2NO+2NC	F4-22
			1NO+3NC	F4-13
			4NC	F4-04
			2NO	F4-20
			1NO+1NC	F4-11
			2NC	F4-02
	 F4 2-pole Front mount			
	 F5 1N/O+1N/C Pneumatic timer	Making time-delay range (s)	0.1~3	F5-T0
			0.1~30	F5-T2
			10~180	F5-T4
		Breaking time-delay range (s)	0.1~3	F5-D0
			0.1~30	F5-D2
			10~180	F5-D4
	 NCF8 2-pole Side mount	Contacts aux	1NO+1NC	NCF8-11
Surge arrester	 SR8-B/RC250 Surge arrester	Voltage protection scope	48	24V~48V AC/DC
			250	110V~250V AC/DC (for RV type) 127V~250V AC (for RC type)
			440	380V~440V AC

Overload relays



NR8-38
Bimetallic style
Overload relay

NR8-38		
Rated current (A)		
0.10-0.14	0.9-1.25	7.5-10
0.14-0.2	1.1-1.6	9-13
0.18-0.25	1.4-2	12-16
0.22-0.32	1.8-2.5	14-20
0.28-0.4	2.2-3.2	18-24
0.35-0.5	2.8-4	23-32
0.45-0.63	3.5-5	30-38
0.55-0.8	4.5-6.3	
0.7-1	5.5-8	

D

«Электро-Профи» - www.ep.ru

Frame size	40A	50A	65A	80A	100A
Contactors	 3-pole	 4-pole		 3-pole	 4-pole
Auxiliary contact block	 F4 4-pole Front mount	Contacts aux	4NO	F4-40	
			3NO+1NC	F4-31	
			2NO+2NC	F4-22	
			1NO+3NC	F4-13	
			4NC	F4-04	
			2NO	F4-20	
			1NO+1NC	F4-11	
			2NC	F4-02	
	 F4 2-pole Front mount				
	 F5 1N/O+1N/C Pneumatic timer	Making time-delay range (s)	0.1~3	F5-T0	
			0.1~30	F5-T2	
			10~180	F5-T4	
		Breaking time-delay range (s)	0.1~3	F5-D0	
			0.1~30	F5-D2	
			10~180	F5-D4	
	 NCF8 2-pole Side mount	Contacts aux	1NO+1NC	NCF8-11	
Surge arrester	 SR8-C/RC440 Surge arrester	Voltage protection scope	48	24V~48V AC/DC	
			250	110V~250V AC/DC (for RV type) 127V~250V AC (for RC type)	
			440	380V~440V AC	

«Электро-Профи» - www.ep.ru

Frame size	115A	150A	170A	205A	265A	300A	400A	500A
Contactors	 3-pole			 3-pole			 3-pole	
Auxiliary contact block	 F4 4-pole Front mount  F4 2-pole Front mount			Contacts aux: 4NO F4-40; 3NO+1NC F4-31; 2NO+2NC F4-22; 1NO+3NC F4-13; 4NC F4-04; 2NO F4-20; 1NO+1NC F4-11; 2NC F4-02				
	 F5 1N/O+1N/C Pneumatic timer			Making time-delay range (s): 0.1~3 F5-T0; 0.1~30 F5-T2; 10~180 F5-T4. Breaking time-delay range (s): 0.1~3 F5-D0; 0.1~30 F5-D2; 10~180 F5-D4				
	 1NO+1NC NCF1 2-pole Side mount		NCF1-11C	 1NO+1NC NCF1 2-pole Side mount			NCF1-11C/B	
Surge arrester	/							

D

«Электро-Профи» - www.ep.ru

Frame size	40A	50A	65A	80A	100A	115A	150A	170A
Contactors	 3-pole		 4-pole	 3-pole		 4-pole		 3-pole
Overload relays	 NR2-93 Bimetallic style Overload relay		NR2-93 Rated current (A) 23 ~ 32 30 ~ 40 37 ~ 50 48 ~ 65 55 ~ 70 63 ~ 80 80 ~ 93 NRE8-100			NR2-200 Rated current (A) 100 ~ 160 125 ~ 200		
	 NRE8-100 Electronic style Overload relay		Rated current (A) 65 100					

Frame size	205A	265A	300A	400A	500A
Contactors	 3-pole			 3-pole	
Overload relays	 NR2-630 Bimetallic style Overload relay			NR2-630 Rated current (A) 160~250 200~315 250~400 315~500 400~630	

«Электро-Профи» - www.ep.ru

Frame size			6A	9A	12A	6A	9A	12A
Contactors			AC coil			DC coil		
3-pole	Auxiliary contacts	1NO	NC8-06M10	NC8-09M10	NC8-12M10	NC8-06M10/Z	NC8-09M10/Z	NC8-12M10/Z
		1NC	NC8-06M01	NC8-09M01	NC8-12M01	NC8-06M01/Z	NC8-09M01/Z	NC8-12M01/Z
4-pole	Main contacts	4NO	NC8-06M/4	NC8-09M/4	NC8-12M/4	NC8-06M/4/Z	NC8-09M/4/Z	NC8-12M/4/Z
		2NO+2NC	NC8-06M/22	NC8-09M/22	NC8-12M/22	NC8-06M/22/Z	NC8-09M/22/Z	NC8-12M/22/Z

Ratings/IEC/EN 60947-4-1		kW	A	kW	A	kW	A	kW	A	kW	A	kW	A
AC-1			20		20		20		20		20		20
AC-3	220V/230V/240V	1.5	6	2.2	9	3	12	1.5	6	2.2	9	3	12
	380V/400V	2.2	6	4	9	5.5	12	2.2	6	4	9	5.5	12
	415V	2.2	6	4	9	5.5	12	2.2	6	4	9	5.5	12
	660V/690V	3	3.8	4	4.9	4	4.9	3	3.8	4	4.9	4	4.9

Ratings/UL508		hp	A	hp	A	hp	A	hp	A	hp	A	hp	A
Continuous current			20		20		20		20		20		20
Single phase	110V/120V	0.3		0.5		0.75		0.3		0.5		0.75	
	230V/240V	0.75		1.5		2		0.75		1.5		2	
Three phases	200V/208V	1.5		3		3		1.5		3		3	
	230V/240V	1.5		3		3		1.5		3		3	
	460V/480V	3		5		7.5		3		5		7.5	
	575V/600V	3		5		10		3		5		10	

D

«Электро-Профи» - www.ep.ru

Frame size	6A	9A	12A	6A	9A	12A
Contactors	AC coil 			DC coil 		

Auxiliary contact block	 F8 Front mount	contacts number	4NO	F8-40
			3NO+1NC	F8-31
			2NO+2NC	F8-22
			1NO+3NC	F8-13
			4NC	F8-04
			2NO	F8-20
			1NO+1NC	F8-11
			2NC	F8-02

Surge arrester	 SR8-A Surge arrester	Voltage protection scope	48	24V~48V AC/DC
			250	110V~250V AC/DC
			440	380V~440V AC

Overload relays	 NR8-11.5 Bimetallic style Overload relay	NR8-11.5		
		Rated current (A)		
			0.1~0.16 0.16~0.25 0.25~0.4 0.4~0.63 0.63~1 1~1.6	1.6~2.5 2.5~4 4~6 5.5~8 7~10 9~13

«Электро-Профи» - www.ep.ru

4. Technical data

4.1 Working environment and technical index

Overvoltage category		Ⅲ		
Pollution degree		3		
Standard		IEC/EN 60947-4-1		
Certificate		CE, UL, KEMA		
Protection degree		IP20(NC8-06M~65)	IP10(NC8-80~170)	IP00(NC8-205~500)
Ambient air temperature	being working	-5℃~+40℃, the average temperature during 24 hours should not exceed +35℃. More information refer to table 1		
	transportation or storage	-25℃~+55℃, or up to +70℃ for a short time (in 24 hours)		
Altitude(m)		no exceeding 2000m, more information refer to table 2		
Atmosphere conditions		At mounting side, relative humidity no exceeding 50%, at the max temperature of +40℃. Higher relative humidity is allowable under lower temperature. For example, RH could be +20℃, special measure should be taken to occurrence of dews.		
Installation conditions		the inclination between installation plane and vertical plane is within ±5°		
Impact and shake		the product should be used in the places where there are no obvious impact and shake		

Table 1

environment temperature(℃)	40	50	60	70
correction coefficient	1	0.875	0.75	0.625

Table 2

Altitude(m)	2000	3000	4000
Rated impulse withstand voltage Correction coefficient	1	0.88	0.78
Rated operational current Correction coefficient	1	0.92	0.9

D

«Электро-Профи» - www.ep.ru

4.2 Main circuit parameter and technic capability

Frame size			6A	9A	12A	9A	12A	18A
			Mini type			Normal type		
Rated conventional heating current(A)			20	20	20	25	25	32
Rated insulation voltage(V)			690					
Rated impulse withstand voltage(kV)			6					
Rated making capability			making current: 10×Ie(AC-3) or 12×Ie(AC-4)					
Rated breaking capability			making-breaking current: 8×Ie(AC-3) or 10×Ie(AC-4)					
Short-time withstand current(A)		10s	48	72	96	72	96	144
Rated operational current (A)	220V/230V/240V	AC-3	6	9	12	9	12	18
		AC-4						
	380V/400V	AC-3	6	9	12	9	12	18
		AC-4			9			
	415V	AC-3	6	9	12	9	12	18
		AC-4			9			
	660V/690V	AC-3	3.8	4.9	4.9	6.7	9	10.6
		AC-4	3.8	4.9	4.9	6.7	9	10.6
Rated control power	AC-3(kW)	220V/230V/240V	1.5	2.2	3	2.2	3	4
		380V/400V	2.2	4	5.5	4	5.5	7.5
		415V	2.2	4	5.5	4	5.5	9
		660V/690V	3	4	4	5.5	7.5	9
	1PH(HP)	110V/120V	0.3	0.5	0.75	0.5	0.75	1
		230V/240V	0.75	1.5	2	1	2	3
	3PH(HP)	200V/208V	1.5	3	3	3	3	5
		230V/240V	1.5	3	3	3	3	5
		460V/480V	3	5	7.5	5	7.5	10
		575V/600V	3	5	10	7.5	10	15
Operating frequency(415V)		AC-3	1,200 operations/h					
		AC-4	300 operations/h					
Electrical life(415V)		AC-3	1,200,000 Operations					
		AC-4	to see Electrical life curves, page 32					
Mechanical life			10,000,000 Operations					
Configuration of main contacts			3-pole:3NO; 4-pole:4NO or 2NO+2NC					
Matched fuse type			RT16-20	RT16-20	RT16-20	RT16-20	RT16-25	RT16-32
Matched thermal over-load relay		Modle	NR8-11.5			NR8-38		
		current range	0.1~0.16 0.16~0.25 0.25~0.4 0.4~0.63	0.63~1 1~1.6 1.6~2.5	2.5~4 4~6 5.5~8 7~10 9~13	0.10-0.14 0.14-0.2 0.18-0.25 0.22-0.32 0.28-0.4 0.35-0.5 0.45-0.63 0.55-0.8 0.7-1 0.9-1.25 1.1-1.6 1.4-2 1.8-2.5 2.2-3.2 2.8-4 3.5-5 4.5-6.3 5.5-8 7.5-10 9-13 12-16 14-20 18-24 23-32 30-38		

«Электро-Профи» - www.ep.ru

25A	32A	38A	40A	50A	65A	80A	100A	115A	150A	170A
	Normal type									
40	55	55	60	80	80	125	125	200	200	275
	690									
	6		8							
	making current:10×Ie(AC-3) or 12×Ie(AC-4)									
	making-breaking current:8×Ie(AC-3) or 10×Ie(AC-4)									
200	256	304	320	400	520	640	800	920	1200	1360
25	32	38	40	50	65	80	100	115	150	170
25	32	38	40	50	65	80	100	115	150	170
		32								150
25	32	38	40	50	65	80	100	115	150	170
		32								150
17.3	21.9	21.9	34	39	42	49	49	86	107	118
14	17.3	17.3	34	39	42	49	49			107

5.5	7.5	9	11	15	18.5	22	25	37	45	55
11	15	18.5	18.5	22	30	37	45	55	75	90
11	15	18.5	22	25	37	45	45	59	80	100
15	18.5	18.5	30	33	37	45	45	80	100	110
1.5	2	2	3	5	5	7.5	10	10	15	15
3	5	5	5	7.5	10	20	20	25	30	30
7.5	10	10	10	15	20	30	30	40	50	60
7.5	10	10	10	15	20	30	30	40	60	60
15	20	20	30	40	50	60	60	100	125	150
20	25	25	30	40	50	60	60	100	125	150

1,200 operations/h										
300 operations/h			120 operations/h							
1,200,000 Operations								800,000 Operations		600,000 Operations
to see Electrical life curves, page 32										
			10,000,000 Operations					6,000,000 Operations		
			3-pole: 3NO; 4-pole: 4NO					3-pole: 3NO		
RT16-50	RT16-63	RT16-63	RT16-63	RT16-80	RT16-80	RT16-100	RT16-125	NT2-224	NT2-224	NT3-315
NR8-38			NR2-93			NRE8-100		NR2-200		
0.10-0.14 0.45-0.63 1.8-2.5 7.5-10 30-38 0.14-0.2 0.55-0.8 2.2-3.2 9-13 0.18-0.25 0.7-1 2.8-4 12-16 0.22-0.32 0.9-1.25 3.5-5 14-20 0.28-0.4 1.1-1.6 4.5-6.3 18-24 0.35-0.5 1.4-2 5.5-8 23-32			23~32 30~40 37~50 48~65	55~70 63~80 80~93		65 100		100~160 125~200		

D

Frame size			205A	265A	300A	400A	500A
			Normal type				
Rated conventional heating current(A)			300	330	380	450	630
Rated insulation voltage(V)			1000				
Rated impulse withstand voltage(kV)			8				
Rated making capability			making current: 10×Ie(AC-3) or 12×Ie(AC-4)				
Rated breaking capability			making-breaking current: 8×Ie(AC-3) or 10×Ie(AC-4)				
Short-time withstand current(A)		10s	1640	2120	2400	3200	4000
Rated operational current (A)	220V/230V/240V	AC-3	205	265	300	400	500
		AC-4	205	265	300	400	500
	380V/400V	AC-3	205	265	300	400	500
		AC-4	205	265	300	400	500
	415V	AC-3	205	265	300	400	500
		AC-4	205	265	300	400	500
	660V/690V	AC-3	137	185	235	303	354
		AC-4	137	185	235	303	354

Rated control power	AC-3(kW)	220V/230V/240V	63	75	90	132	160
		380V/400V	110	132	160	200	250
		415V	110	140	160	220	280
		660V/690V	132	160	200	300	355
	1PH(HP)	110V/120V	15	20	25	30	40
		230V/240V	30	40	50	60	75
	3PH(HP)	200V/208V	60	75	100	125	150
		230V/240V	75	100	125	150	200
		460V/480V	150	200	250	300	400
		575V/600V	200	250	300	400	500

Operating frequency(415V)	AC-3	600 operations/h			300 operations/h		
	AC-4	30 operations/h					
Electrical life(415V)	AC-3	1,000,000 Operations			800,000 Operations		
	AC-4	to see Electrical life curves, page 32					
Mechanical life		6,000,000 Operations					
Configuration of main contacts		3-pole:3NO					
Matched fuse type		RT16(36)-315	RT16(36)-400	RT16(36)-425	RT16(36)-500	RT16(36)-800	
Matched thermal over-load relay	Modle	NR2-630					
	current range	160~250 200~315 250~400 315~500 400~630					

«Электро-Профи» - www.ep.ru

4.3 The connection capability of main control circuit

Connection circuit	frame size		6A	9A	12A	9A	12A	18A	25A	32A	38A	40A	50A	65A	80A	100A
			Mini type			Normal type										
Main circuit connection	cable connection (mm^2)	flexible cable (with cold-press terminal)	single cable	1~2.5		1~4		1.5~6	2.5~10			10~25			16~50	
			duad cable	1~1.5		1~2.5		1~4	2.5~6			4~16			10~35	
		stiff cable	single cable	1~2.5		1~4		1.5~4	2.5~10			-			-	
			duad cable	1~2.5		1~4		1.5~4	2.5~10			-			-	
	screw size			M3		M3.5			M4			M8				
	tightening torque		(N.m)	0.8		1.2			2			6				
			(lb.in.)	7		7			10			45				
Control circuit connection	cable connection (mm^2)	flexible cable (with cold-press terminal)	single cable	1~2.5		1~4										
			duad cable	1~1.5		1~2.5										
		stiff cable	single cable	1~2.5		1~4										
			duad cable	1~2.5		1~4										
	screw size			M3		M3.5										
	tightening torque		(N.m)	0.8		1.2										
			(lb.in.)	7		7										

Connection circuit	frame size		115A	150A	170A	205A	265A	300A	400A	500A
			Normal type							
Main circuit connection	cable connection (mm^2)	flexible cable (with cold-press terminal)	single cable	10~95						
			duad cable	10~50			-			
		stiff cable	single cable	10~95			50~240			
			duad cable	10~50			50~240			
	screw size			M10			M10			
	tightening torque		(N.m)	10			14			
			(lb.in.)				124			
Control circuit connection	cable connection (mm^2)	flexible cable (with cold-press terminal)	single cable	1~4						
			duad cable	1~2.5						
		stiff cable	single cable	1~4						
			duad cable	1~4						
	screw size			M3.5						
	tightening torque		(N.m)	1.2						
			(lb.in.)	7						

D

«Электро-Профи» - www.ep.ru

4.4 The characteristic of AC control circuit

Connection circuit	Frame size	6A	9A	12A	9A	12A	18A	25A	32A	38A	40A	50A	65A	80A	100A
		Mini type			Normal type										
Coil voltage(V)	AC 50Hz AC 50Hz/60Hz AC 60Hz	24, 36, 48, 110, 127, 220, 230, 240, 380, 400, 415													
	DC	24, 48, 110, 125, 220, 250													
Acting range	attraction(hot)	(85%~110%)Us; +40℃													
	release(cold)	AC: (20%~75%)Us, DC: (10%~75%)Us; -5℃													
The average power of AC coil(VA)	start	25~40			50~70						160~210			190~250	
	holding	2~7			6~10						13~25			17~30	
Heat wastage(W)	AC	1~4			2~4						4~7			5~8	
Main contact action time(ms)	close	10~18			12~25						15~25			15~30	
	disconnection	4~16			5~20						6~15			8~17	

Connection circuit	Frame size	115A	150A	170A	205A	265A	300A	400A	500A
		Normal type			Normal type				
Coil voltage(V)	AC	AC/DC			AC/DC				
	DC	110~127, 220~240, 380~415 /W: 100~250			110~127, 220~240, 380~415				
Acting range	attraction(hot)	(85%~110%)Us; +40℃							
	release(cold)	(10%~75%)Us; -5℃							
The average power of AC coil(VA)	start	600~700			300~600			500~800	
	holding	3~5			6~11			7~12	
Heat wastage(W)	AC	2~4			5~10			6~11	
	DC								
Main contact action time(ms)	close	15~30			30~95			45~100	
	disconnection	40~50			40~80			60~100	

«Электро-Профи» - www.ep.ru

4.5 Main technical data of accessories

F4, front mount	matched contactor	model of accessories		F4-20	F4-11	F4-02	F4-40	F4-31	F4-22	F4-13	F4-04
	NC8-09~500	contacts	N/O	2	1	0	4	3	2	1	0
			N/C	0	1	2	0	1	2	3	4
F8, front mount	matched contactor	model of accessories		F8-20	F8-11	F8-02	F8-40	F8-31	F8-22	F8-13	F8-04
	NC8-06M~12M	contacts	N/O	2	1	0	4	3	2	1	0
			N/C	0	1	2	0	1	2	3	4
NCF8, side mount	matched contactor	model of accessories		NCF8-11							
	NC8-09~100	contacts	N/O	1							
			N/C	1							
NCF1, side mount	matched contactor	model of accessories		NCF1-11C or NCF1-11C/B							
	NC8-115~500	contacts	N/O	1							
			N/C	1							
F5, Pneumatic timer	matched contactor	model of accessories		F5-T0		F5-T2	F5-T4	F5-D0	F5-D2	F5-D4	
	NC8-09~500	contacts	N/O	1		1	1	1	1	1	
			N/C	1		1	1	1	1	1	
		time-delay range(s)		0.1~3		0.1~30	10~180	0.1~3	0.1~30	10~180	
SR8, surge arrester	NC8-06M~12M	SR8-A									
	NC8-09~38	SR8-B									
	NC8-40~100	SR8-C									
Rated operational voltage(V)				up to 690							
Rated insulation voltage(V)				690							
Rated conventional current(A)				10							
Rated making capability				making current 10×Ie(AC-15) or 1×Ie(DC-13)							
Short-circuit protection				gG fuse: 10A							
Control capacity			AC-15	360VA							
			AC-13	69W							
Standard				IEC/EN 60947-5-1							
Certificate				CE, UL, KEMA							
Protection degree				IP20							
Cable connection (mm^2)	flexible cable (without cold-press terminal)		single cable	1~4							
			duad cable	1~4							
	flexible cable (with cold-press terminal)		single cable	1~4							
			duad cable	1~2.5							
	inflexible cable		single cable	1~4							
			duad cable	1~4							
screw size				M3.5							
tightening torque		(N.m)		1.2							
		(lb.in.)		7							

Note: The requirement to the environment of accesseries is same with that of the contactors'.
You can order the product that you need or recognize your existing product according to the above-mentioned number and the letter of alphabet code.

«Электро-Профи» - www.ep.ru

5. Derived products

5.1 3-pole Reversing contactor



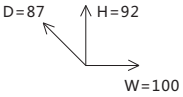

Frame size	Aux. contacts	
	1NO+1NC	2NO+2NC
9A	NC8-09/N	NC8-0922/N
12A	NC8-12/N	NC8-1222/N
18A	NC8-18/N	NC8-1822/N



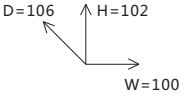

Frame size	Aux. contacts	
	1NO+1NC	2NO+2NC
25A	NC8-25/N	NC8-25922/N
32A	NC8-32/N	NC8-3222/N
38A	NC8-38/N	NC8-3822/N



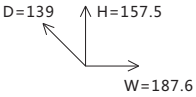

Frame size	Aux. contacts
	1NO+1NC
40A	NC8-40/N
50A	NC8-50/N
65A	NC8-65/N



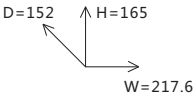

Frame size	Aux. contacts
	1NO+1NC
80A	NC8-80/N
100A	NC8-100/N



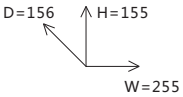

Frame size	Aux. contacts
	2NO+2NC
115A	NC8-115/N
150A	NC8-150/N
170A	NC8-170/N



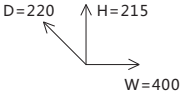

Frame size	Aux. contacts
	4NO+4NC
205A	NC8-205/N
265A	NC8-265/N
300A	NC8-300/N



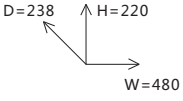

Frame size	Aux. contacts
	4NO+4NC
400A	NC8-400/N
500A	NC8-500/N

«Электро-Профи» - www.ep.ru

5.2 4-pole Reversing contactor



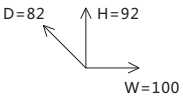

Frame size	Aux. contacts
	4NO
9A	NC8-09/4/N
12A	NC8-12/4/N
18A	NC8-18/4/N



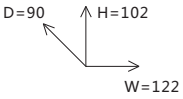

Frame size	Aux. contacts
	4NO
25A	NC8-25/4/N
32A	NC8-32/4/N
38A	NC8-38/4/N

D



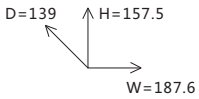

Frame size	Aux. contacts
	4NO
40A	NC8-40/4/N
50A	NC8-50/4/N
65A	NC8-65/4/N



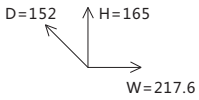

Frame size	Aux. contacts
	4NO
80A	NC8-80/4/N
100A	NC8-100/4/N

«Электро-Профи» - www.ep.ru

5.3 Mini type Reversing contactors/AC coil



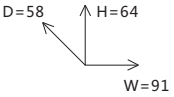

Frame size	3-pole	
	Aux. contacts	
	1NO	1NC
6A	NC8-06M10/N	NC8-06M01/N
9A	NC8-09M10/N	NC8-09M01/N
12A	NC8-12M10/N	NC8-12M01/N



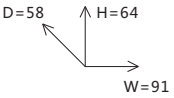

Frame size	4-pole	
	Main contacts	
	4NO	
6A	NC8-06M/4/N	
9A	NC8-09M/4/N	
12A	NC8-12M/4/N	

5.4 Mini type Reversing contactors/DC coil



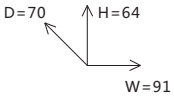

Frame size	3-pole	
	Aux. contacts	
	1NO	1NC
6A	NC8-06M10/Z/N	NC8-06M01/Z/N
9A	NC8-09M10/Z/N	NC8-09M01/Z/N
12A	NC8-12M10/Z/N	NC8-12M01/Z/N



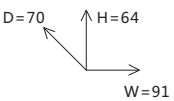

Frame size	4-pole	
	Main contacts	
	4NO	
6A	NC8-06M/4/Z/N	
9A	NC8-09M/4/Z/N	
12A	NC8-12M/4/Z/N	

«Электро-Профи» - www.ep.ru

5.5 Magnetic starter

Mini type frame size from 6A to 12A





Normal type frame size from 40A to 170A







5.6 Star-delta starter



D

«Электро-Профи» - www.ep.ru

6. Overall and mounting dimensions (mm)



NC8-06M~12M
NC8-06M/4~12M/4

Model	Amax	Bmax	Cmax	Dmax	a	b	Φ
NC8-06M~12M	45	59	58	94	35±0.28	50±0.32	4.2
NC8-06M/4~12M/4	45	59	58	94	35±0.28	50±0.32	4.2
NC8-06M/Z~12M/Z	45	59	70	106	35±0.28	50±0.32	4.2
NC8-06M/4/Z~12M/4/Z	45	59	70	106	35±0.28	50±0.32	4.2



NC8-06M/Z~12M/Z
NC8-06M/4/Z~12M/4/Z

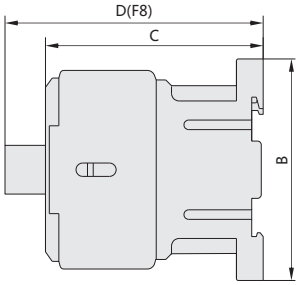

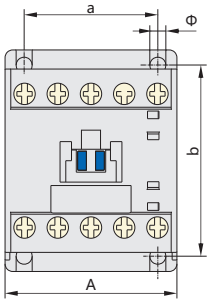



NC8-09~18

Model	Amax	Bmax	Cmax	Dmax	Emax	a	b	Φ
NC8-09~18	45	87	87	120	142	35±0.28	55~63	4.4
NC8-09/Z~18/Z	45	87	123	156	178	35±0.28	55~63	4.4
NC8-25~38	45	97	106	139	160	35±0.28	60~70	4.4
NC8-25/Z~38/Z	45	97	141	174	195	35±0.28	60~70	4.4

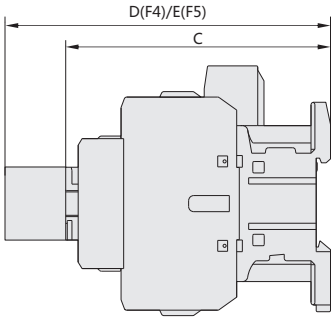

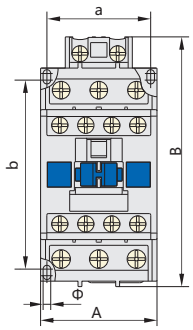



NC8-25~38

Model	Amax	Bmax	Cmax	Dmax	Emax	a	b	Φ
NC8-09/4~18/4	45	87	82	115	136	35±0.28	55~63	4.4
NC8-09/4/Z~18/4/Z	45	87	118	151	172	35±0.28	55~63	4.4
NC8-25/4~38/4	57	97	90	122.5	144	35±0.28	60~70	4.4
NC8-25/4/Z~38/4/Z	57	97	125	158	180	35±0.28	60~70	4.4



NC8-09/4~18/4

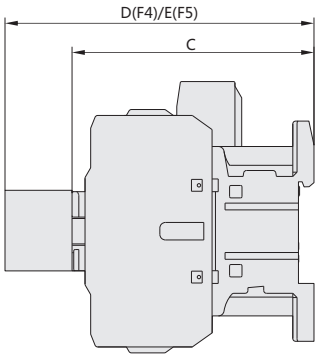

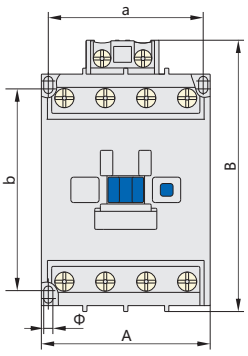



NC8-25/4~38/4

«Электро-Профи» - www.ep.ru



NC8-40~65

Model	Amax	Bmax	Cmax	Dmax	Emax	a	b	Φ
NC8-40~65	77	122.5	118	150	172	64±0.37	100~110	6.0
NC8-40/Z~65/Z	77	142	179	212	233	40	105	6.5
NC8-80~100	87	130	127	159	180	74±0.37	105~116	5.5
NC8-80/Z~100/Z	87	147	184	217	238	40	105	6.5

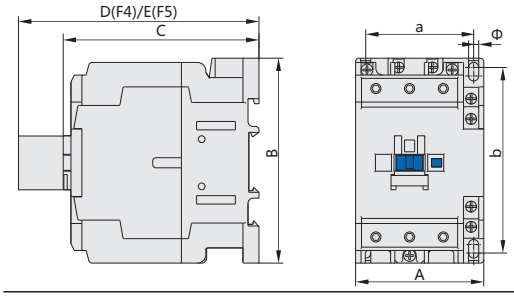



NC8-80~100

Model	Amax	Bmax	Cmax	Dmax	Emax	a	b	Φ
NC8-115~170	120	156	155	190.5	210.5	96~110	130±0.8	7.0

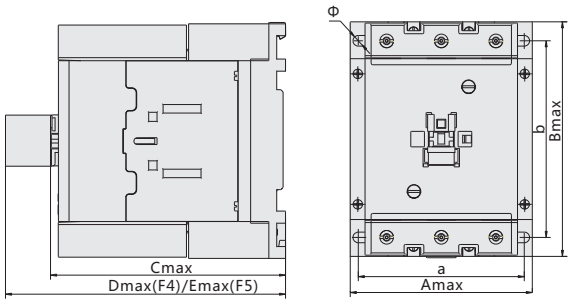



NC8-115~170

Model	Amax	Bmax	Cmax	Dmax	Emax	a	b	Φ
NC8-205~300	150	235	207	239	260	120	180	9.0
NC8-400~500	165	248	225	258	280	130	180	9.0

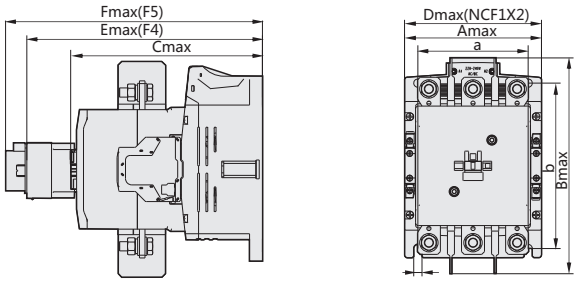



NC8-205~500

Model	Amax	Bmax	Cmax	Dmax	Emax	a	b	Φ
NC8-40/4~65/4	84	122.5	118	150	172	71±0.37	100~110.5	6.0
NC8-40/4/Z~65/4/Z	84	142	179	212	233	40	105	6.5
NC8-80/4~100/4	99	130	127	158	180	86±0.5	105~118.5	5.5
NC8-80/4/Z~100/4/Z	99	147	184	217	238	40	105	6.5

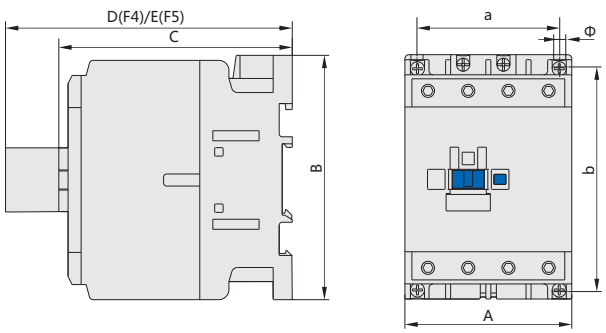



NC8-40/4~65/4



NC8-80/4~100/4

«Электро-Профи» - www.ep.ru

7. Excursus

7.1 Electric life Curves

Electric life curves (AC-3 Ue=400V)

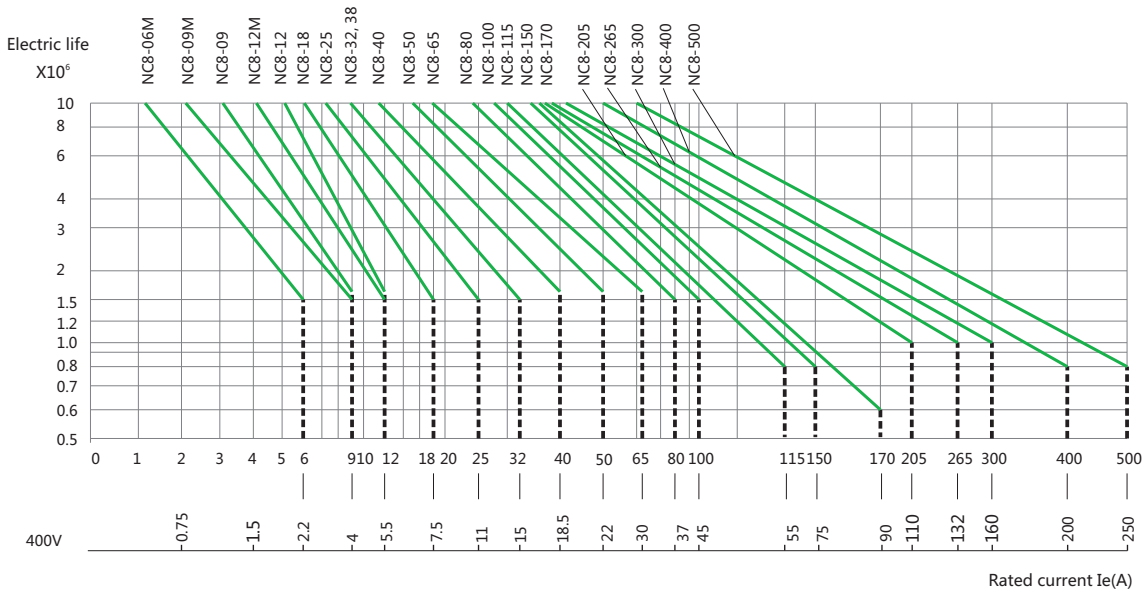

Rated outputs of three-phase motors (50Hz AC-3)

«Электро-Профи» - www.ep.ru

Electric life curves (AC-2, AC-4 Ue=400V)

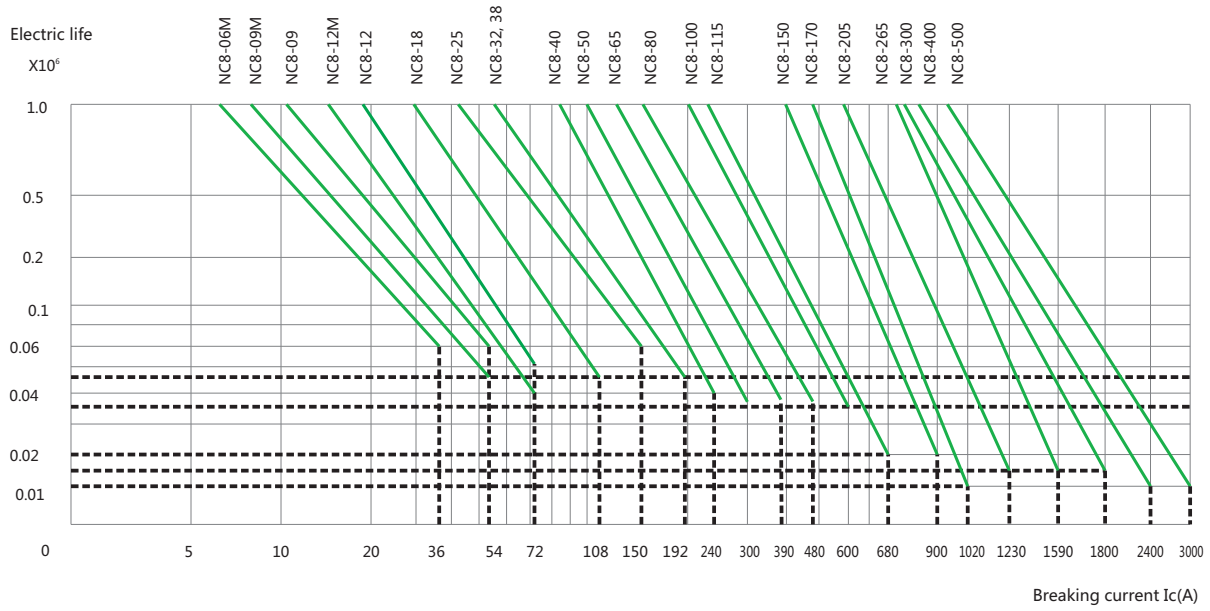

Example:
Request to control the start of three-phase motors
main technical parameter of three-phase motors: P=11kW, Ue=380V, Ie=22.6A
usage category: AC-3, The electric life span of request: 1,000,000 operations
the contactor should be NC8-25 according to the curves above

«Электро-Профи» - www.ep.ru

7.2 The application in illumination circuit

Model of contactor			**06M, 09M, 12M**	**09, 12**	**18**	**25**	**32, 38**	**40**	**50, 65**	**80, 100**
lamp technical data (220V/240V)			maximum permissible number of lamps per phase							
W	A	μF								
Incandescent lamp										
60	0.27	-	35	59	77	92	129	163	207	296
75	0.34	-	28	47	61	73	103	129	164	235
100	0.45	-	21	35	46	55	77	97	124	177
150	0.68	-	14	23	30	36	51	64	82	117
200	0.91	-	10	17	23	27	38	48	62	88
300	1.40	-	6	11	15	18	25	31	40	57
500	2.30	-	4	7	8	11	15	19	24	34
750	3.40	-	2	4	6	7	10	13	16	23
1000	4.60	-	2	3	4	5	7	9	12	17
Single fluorescent lamp (with starter, without compensation)										
20	0.39	-	24	41	53	66	89	112	143	205
40	0.45	-	21	35	46	57	77	97	124	177
65	0.70	-	12	22	30	37	50	62	80	114
80	0.80	-	12	20	26	32	43	55	70	100
110	1.15	-	8	12	15	20	26	35	46	66
Single fluorescent lamp (with starter, with parallel compensation)										
20	0.18	5	83	94	105	155	215	233	335	530
40	0.26	5	58	65	75	107	150	160	230	365
65	0.42	7	35	40	45	66	92	100	142	225
80	0.52	7	28	32	36	53	74	80	115	180
100	0.60	16	23	26	29	43	59	64	92	145
110	0.70	18	21	24	27	40	55	59	85	135
Fluorescent lamps in dual mounting (with starter, without compensation)										
2×20	2×0.22	-	21	36	46	58	78	100	126	180
2×40	2×0.41	-	11	18	24	30	42	52	68	96
2×65	2×0.67	-	7	10	14	18	26	32	40	58
2×80	2×0.82	-	5	8	12	14	20	26	34	48
2×110	2×1.10	-	4	6	8	10	14	18	24	36

..... to be continued

«Электро-Профи» - www.ep.ru

Model of contactor			06M, 09M, 12M	09, 12	18	25	32, 38	40	50, 65	80, 100
lamp technical data (220V/240V)			maximum permissible number of lamps per phase							
W	A	μF								
Fluorescent lamps in dual mounting (with starter, with compensation in series)										
2×20	2×0.13	-	36	60	80	100	134	168	214	306
2×40	2×0.24	-	20	32	42	54	72	90	116	166
2×65	2×0.39	-	12	20	26	32	44	56	70	102
2×80	2×0.48	-	10	16	20	26	36	44	58	82
2×110	2×0.65	-	7	12	16	20	26	32	42	60
Single fluorescent lamp (without starter, without compensation)										
20	0.43	-	22	37	48	60	97	102	130	186
40	0.55	-	17	29	38	47	63	80	101	145
65	0.80	-	12	20	26	32	43	55	70	100
80	0.95	-	10	16	22	27	36	46	58	84
110	0.40	-	6	11	15	18	25	31	40	57
Single fluorescent lamp (with starter, with parallel compensation)										
20	0.19	5	50	84	110	136	184	231	294	421
40	0.29	5	33	55	72	89	101	151	193	275
65	0.46	7	20	34	45	56	76	95	121	173
80	0.57	7	16	28	36	45	61	77	98	140
110	0.79	16	-	20	26	32	44	55	70	101
Fluorescent lamps (without starter, without compensation)										
2×20	2×0.25	-	19	32	42	52	70	88	112	160
2×40	2×0.47	-	10	16	22	26	36	46	158	84
2×65	2×0.76	-	6	10	12	16	22	28	36	52
2×80	2×0.93	-	5	8	10	12	18	22	30	42
2×110	2×1.30	-	3	6	8	10	12	16	20	30
Fluorescent lamps in dual mounting (without starter, with compensation in series)										
2×20	2×0.15	-	34	56	74	92	124	156	200	234
2×40	2×0.26	-	18	30	40	50	66	84	106	152
2×65	2×0.43	-	11	18	24	30	40	50	64	92
2×80	2×0.53	-	9	14	18	24	32	40	32	74
2×110	2×0.72	-	6	10	14	18	24	30	38	54
Low press sodium vapour lamps (with parallel compensation)										
35	0.3	17	-	40	50	63	86	110	140	200
55	0.4	17	-	30	37	47	65	82	105	150
90	0.6	25	-	-	25	31	43	55	70	100
135	0.9	36	-	-	-	21	28	36	46	66
150	1.0	36	-	-	-	19	26	33	42	60
180	1.2	36	-	-	-	15	21	27	35	50
200	1.3	36	-	-	-	14	20	25	32	46

«Электро-Профи» - www.ep.ru

Model of contactor			06M, 09M, 12M	09, 12	18	25	32, 38	40	50, 65	80, 100
lamp technical data (220V/240V)			maximum permissible number of lamps per phase							
W	A	μF								
High press sodium vapour lamps (without compensation)										
150	1.9	-	4	6	7	10	13	17	22	31
250	3.2	-	2	3	4	5	8	10	13	18
400	5.0	-	1	2	3	3	5	6	8	12
700	8.8	-	-	-	2	2	2	3	4	6
1000	12.4	-	-	-	1	1	2	2	3	4
High press sodium vapour lamps (with parallel compensation)										
150	0.84	20	-	-	17	22	30	39	50	71
250	1.4	32	-	-	-	13	18	23	30	42
400	2.2	48	-	-	-	8	11	15	19	27
700	3.6	96	-	-	-	-	6	8	10	15
1000	5.5	120	-	-	-	-	-	6	7	10
High press hydrargyrum lamps (without compensation)										
50	0.54	-	14	22	27	35	48	64	77	111
80	0.81	-	9	14	18	23	32	40	51	74
125	1.20	-	6	9	12	15	21	27	34	49
250	2.30	-	3	5	6	8	11	14	17	26
400	4.10	-	1	2	3	4	6	8	10	14
700	6.80	-	-	1	2	2	3	4	6	8
1000	9.90	-	-	1	1	1	2	3	4	6
High press hydrargyrum lamps (with parallel compensation)										
50	0.30	10	-	40	50	63	86	110	140	120
80	0.45	10	-	26	33	42	57	73	93	133
125	0.67	10	-	17	22	28	38	49	62	89
250	1.3	18	-	9	11	14	20	25	32	46
400	2.3	25	-	-	6	8	11	14	18	26
700	3.8	40	-	-	-	5	6	8	11	15
1000	5.5	60	-	-	-	3	4	8	7	10

8. Ordering information

8.1 The following items should be illustrated when ordering:
8.1.1 The full name and model of contactor;
8.1.2 Rated operational voltage and frequency of coil;
8.1.3 Ordering total pcs;
8.2 Ordering example:NC8-1822 AC contactor,coil voltage 220V,50Hz 10 pcs;

«Электро-Профи» - www.ep.ru



NC7 Series AC Contactor 09~620A

1. General

The NC7 series AC contactor (hereinafter referred to as "contactor") is mainly used in the circuit with an alternating current of 50Hz (or 60Hz), rated operational voltage up to 690V, and rated operational current up to 620A under the usage category of AC-3/400V; this contactor is mainly used for remotely closing and breaking circuits, and can be combined with an appropriate thermal overload relay to form a electromagnetic starter so as to protect the circuits likely to be overloaded in operation; the contactor is well suited for frequently starting and controlling AC motors.

Standard: IEC60947-4-1

2. Operating conditions

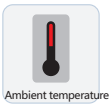

2.1 Ambient air temperature:-5℃~+40℃,
its mean value not greater than +35℃
within 24 hours.



2.2 Atmospheric conditions:
When the maximum temperature is +40℃, the relative humidity of the air shall not be higher than 50%; a higher relative humidity is allowed at a lower temperature, e.g., up to 90% at 20℃. Special measures shall be taken for the condensation occasionally produced due to temperature change.



2.3 Altitude: not higher than 2000m.

2.4 Pollution grade: 3

2.5 Installation classification: Ⅲ

2.6 Installation condition:
the installing surface shall be inclined at not greater than ±5°to the vertical.

2.7 Impact vibration:
The product shall be installed in the place free of remarkable shake, impact and vibration.

2.8 NC7-09~170 : IP10
NC7-205~620 : IP00(IP20 front face with shrouds SHD)

D

«Электро-Профи» - www.ep.ru

3. Type and meaning

3.1 Product type and meaning

NC7 - 09 01 / N

AC Contactor

Main circuit current	
09	9A
12	12A
···	···
475	475A
620	620A

Number of auxiliary contacts		
9A~95A	11	1NO+1NC
115A~170A	···	···
205A~620A	omitted	4NO+4NC

An interlock product		
9A~95A	/N	Reversible product
	omitted	Single unit of the product
115A~170A	/N	Reversible product
	omitted	Single unit of the product
205A~620A	/Nc	Reversible product vertical installation
	/Ns	Reversible product horizontal installation
	omitted	Single unit of the product

3.2 Accessory type and meaning

AX-3 / 20 F5 - T 0

Top suspension auxiliary contactor block

Number of auxiliary contacts	
20	2NO
11	1NO+1NC
02	2NC
40	4NO
31	3NO+1NC
22	2NO+2NC
13	1NO+3NC
04	4NC

Air time-delay head

Time-delay type	
T	Making time-delay
D	Breaking time-delay

Time-delay range	
0	0.1s~3s
2	0.1s~30s
4	10s~180s

NCF1 - 11C NJL S-GG

Side suspension auxiliary contactor block

Number of auxiliary contacts	
11C	1NO+1NC

Mechanical interlock module

Installation mode		Size code	
S	Horizontal installation	GG	NC7-205 Combination of two units
		HH	NC7-250~300 Combination of two arbitrary units
		KK	NC7-410~475 Combination of two arbitrary units
		LL	NC7-620 Combination of two units
C	Vertical installation	GG	NC7-205 Combination of two units
		GH	NC7-205 and NC7-250~300
		GK	NC7-205 and NC7-410~475
		GL	NC7-205 and NC7-620
		HH	NC7-250~300 Combination of two arbitrary units
		HK	NC7-250~300 and NC7-410~475
		HL	NC7-250~300 and NC7-620
		KK	NC7-410~475 Combination of two arbitrary units
		KL	NC7-410~475 and NC7-620
		LL	NC7-620 Combination of two units

Note: For the NC7 product, the 9A-95A mechanical interlock module can be directly purchased with an indication.

«Электро-Профи» - www.ep.ru

4. Quick selection table

Specified current		9A		12A		18A		22A		25A		32A		38A	
															
Number of the auxiliary contacts provided with the body itself	1 NO+1NC auxiliary contact	NC7-0911		NC7-1211		NC7-1811		NC7-2211		NC7-2511		NC7-3211		NC7-3811	
IEC/EN 60974-4-1		kW	A	kW	A	kW	A	kW	A	kW	A	kW	A	kW	A
Appointed free air heat generation current (A)			20		20		32		32		40		50		50
Rated operational current and power	380V/400V(AC-3)	4	9	5.5	12	7.5	18	11	22	11	25	15	32	18.5	38
	380V/400V(AC-4)	1.5	3.5	2.2	5	3	7.7	3	7.7	4	8.5	5.5	12	5.5	12
	660V/690V(AC-3)	5.5	6.6	7.5	8.9	10	12	11	14	15	18	18.5	22	18.5	22
	660V/690V(AC-4)	1.1	1.5	1.5	2	3.7	3.8	3.7	3.8	4	4.4	5.5	7.5	5.5	7.5

Accessories which can be further attached



Side suspension auxiliary contact



Top suspension auxiliary contact



Air delay head



Mechanical interlock module



Surge suppressor



Thermal overload relay



Electronic overload relay

D

«Электро-Профи» - www.ep.ru

Specified current		40A		50A		65A		80A		95A	
											
Number of the auxiliary contacts provided with the body itself	1NO+1NC auxiliary contact	NC7-4011		NC7-5011		NC7-6511		NC7-8011		NC7-9511	
IEC/EN 60974-4-1		kW	A	kW	A	kW	A	kW	A	kW	A
Appointed free air heat generation current (A)			60		80		80		110		110
Rated operational current and power	380V/400V(AC-3)	18.5	40	22	50	30	65	37	80	45	95
	380V/400V(AC-4)	7.5	18.5	11	24	15	28	18.5	37	22	44
	660V/690V(AC-3)	30	34	37	39	37	42	45	49	45	49
	660V/690V(AC-4)	7.5	9	11	12	11	14	15	17.3	18.5	21.3

Accessories which can be further attached



Side suspension auxiliary contact



Top suspension auxiliary contact



Air delay head



Mechanical interlock module



Surge suppressor



Thermal overload relay



Electronic overload relay

«Электро-Профи» - www.ep.ru

Specified current		115A		150A		170A	
							
Number of the auxiliary contacts provided with the body itself		NC7-115		NC7-150		NC7-170	
IEC/EN 60974-4-1		kW	A	kW	A	kW	A
Appointed free air heat generation current (A)			200		200		275
Rated operational current and power	380V/400V(AC-3)	55	115	75	150	90	170
	380V/400V(AC-4)	55	115	75	150	90	150
	660V/690V(AC-3)	80	86	100	107	110	118
	660V/690V(AC-4)	80	86	100	107	110	107

Accessories which can be further attached



Top suspension auxiliary contact



Air delay head



Side suspension auxiliary contact



Thermal overload relay



Electronic overload relay



Mechanical interlock module

«Электро-Профи» - www.ep.ru

Specified current		205A		250A		300A	
							
without auxiliary contacts, can mount two Top suspension auxiliary contacts	mount two AX-3/22 4NO+4NC	NC7-205		NC7-250		NC7-300	
	Other mode	Note		Note		Note	
IEC/EN 60974-4-1		kW	A	kW	A	kW	A
Appointed free air heat generation current (A)			275		315		380
Rated operational current and power	380V/400V(AC-3)	110	205	132	250	160	300
	380V/400V(AC-4)	110	205	132	250	160	300
	660V/690V(AC-3)	129	137	160	170	220	235
	660V/690V(AC-4)	129	137	160	170	220	235

Accessories which can be further attached



Top suspension auxiliary contact



Air delay head



Mechanical interlock module



Thermal overload relay



Electronic overload relay

«Электро-Профи» - www.ep.ru

Specified current		410A		475A		620A	
							
without auxiliary contacts, can mount two Top suspension auxiliary contacts	mount two AX-3/22 4NO+4NC	NC7-410		NC7-475		NC7-620	
	Other mode	Note		Note		Note	
IEC/EN 60974-4-1		kW	A	kW	A	kW	A
Appointed free air heat generation current (A)			450		630		800
Rated operational current and power	380V/400V(AC-3)	200	410	265	475	335	620
	380V/400V(AC-4)	200	410	265	475	335	620
	660V/690V(AC-3)	280	303	335	353	450	462
	660V/690V(AC-4)	280	303	335	353	450	462

Accessories which can be further attached



Top suspension auxiliary contact



Air delay head



Mechanical interlock module



Thermal overload relay



Electronic overload relay

D

«Электро-Профи» - www.ep.ru

Modularized accessories which can be installed additionally

 AX-3 Auxiliary contact	Number of auxiliary contacts	4NO	AX-3/40	Able to be used for the whole series products
		3NO+1NC	AX-3/31	
		2NO+2NC	AX-3/22	
		1NO+3NC	AX-3/13	
		4NC	AX-3/04	
		2NO	AX-3/20	
		1NO+1NC	AX-3/11	
		2NC	AX-3/02	
 F5 1N/O+1N/C Air delay head	On-delay time (s)	0.1~3	F5-T0	Able to be used for the whole series products
		0.1~30	F5-T2	
		10~180	F5-T4	
	Off-delay time (s)	0.1~3	F5-D0	
		0.1~30	F5-D2	
		10~180	F5-D4	
 NCF1-11C Secondary side suspension auxiliary contact	Number of auxiliary contacts	1NO+1NC	NCF1-11C	Able to be used for the products of 170A or lower
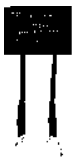 SR2-A Surge suppressor	Suppression voltage range	AC 24V~48V	SR2-A 24V~48V	Able to be used for the products of 9A~38A or lower
		AC 100V~250V	SR2-A 100V~250V	
		AC 380V~440V	SR2-A 380V~440V	
 SR2-C Surge suppressor		AC/DC 24V~48V	SR2-C 24V~48V	Able to be used for the products of 40A~95A or lower
		AC/DC 100V~250V	SR2-C 100V~250V	
		AC/DC 380V~440V	SR2-C 380V~440V	

«Электро-Профи» - www.ep.ru

 NR2 Thermal overload relay		NR2-25	9A~32A	
		NR2-36	32A, 38A	
		NR2-93	40A~95A	
		NR2-150	115A~150A	
		NR2-200	115A~170A	
		NR2-630	205A~620A	
 NRE8 Electronic overload relay		NRE8-25	9A~32A	
		NRE8-40	40A	
		NRE8-100	40A~95A	
		NRE8-200	115A~170A	
		NRE8-630	205A~620A	
 NC7-09~95 Mechanical interlock module	9A~95A	Purchase individually	How to purchase the products of 205A or higher	Purchase it individually, and install it by yourself
	40A~95A	Reversible product without connecting wire		Directly purchase the reversible products (specified current for two contactors to be the same)
	9A~38A	Reversible product with connecting wire		
	115A~170A	Purchase individually		

 NC7-115~170 Mechanical interlock	Over 205A product mechanical interlocking mechanism code	Horizontal installation	NJLs-GG	NC7-205 Combination of two units
			NJLs-HH	NC7-250~300 Combination of two arbitrary units
			NJLs-KK	NC7-410~475 Combination of two arbitrary units
			NJLs-LL	NC7-620 Combination of two units
 NC7-205~620 Mechanical interlock		Vertical installation	NJLc-GG	NC7-205 Combination of two units
			NJLc-GH	NC7-205 and NC7-250~300
			NJLc-GK	NC7-205 and NC7-410~475
			NJLc-GL	NC7-205 and NC7-620
			NJLc-HH	NC7-250~300 Combination of two units
			NJLc-HK	NC7-250~300 and NC7-410~475
			NJLc-HL	NC7-250~300 and NC7-620
			NJLc-KK	NC7-410~475 Combination of two units
			NJLc-KL	NC7-410~475 and NC7-620
			NJLc-LL	NC7-620 Combination of two units

«Электро-Профи» - www.ep.ru

5. Main parameters and technical performance

5.1 Main parameters and technical performance criteria for the NC7 product

Type			NC7-09	NC7-12	NC7-18	NC7-22	NC7-25	NC7-32	NC7-38	NC7-40	NC7-50	NC7-65	NC7-80	NC7-95
Rated operational current (A)	380V/400V	AC-3	9	12	18	22	25	32	38	40	50	65	80	95
		AC-4	3.5	5	7.7	7.7	8.5	12	12	18.5	24	28	37	44
	660V/690V	AC-3	6.6	8.9	12	14	18	22	22	34	39	42	49	49
		AC-4	1.5	2	3.8	3.8	4.4	7.5	7.5	9	12	14	17.3	21.3
Appointed free air heat generation current (A)			20	20	32	32	40	50	50	60	80	80	110	110
Rated insulation voltage (V)			690	690	690	690	690	690	690	690	690	690	690	690
Rated impulse withstand voltage (kV)			6	6	6	6	6	6	6	8	8	8	8	8
Rated making capacity			Making current: 10xIe(AC-3) or 12xIe(AC-4)											
Rated breaking capacity			Making/breaking current: 8xIe(AC-3) or 10xIe(AC-4)											
Short time withstand current (10s)			72	96	144	176	200	256	304	320	400	520	640	760
Controllable three-phase squirrel-cage motor power(AC-3)kW		380V/400V	4	5.5	7.5	11	11	15	18.5	18.5	22	30	37	45
		660V/690V	5.5	7.5	10	11	15	18.5	18.5	30	37	37	45	45
Intermittent-periodic-duty motor power(AC-4)kW		380V/400V	1.5	2.2	3	3	4	5.5	5.5	7.5	11	15	18.5	22
		600V/690V	1.1	1.5	3.7	3.7	4	5.5	5.5	7.5	11	11	15	18.5
Frequency of operation (times/h)	Electrical life	AC-3	1200	1200	1200	1200	1200	600	600	600	600	600	600	600
		AC-4	300	300	300	300	300	300	300	300	300	300	120	120
	Mechanical life		3600	3600	3600	3600	3600	3600	3600	3600	3600	3600	3600	3600
Electrical life (ten thousand times)		AC-3	100	100	100	100	100	80	80	80	60	60	60	60
		AC-4	20	20	20	20	20	20	20	15	15	15	10	10
Mechanical life(ten thousand times)			1000	1000	1000	1000	1000	800	800	800	800	800	600	600
Type of the fuse adapted			RT16-20	RT16-20	RT16-32	RT16-32	RT16-40	RT16-50	RT16-50	RT16-63	RT16-80	RT16-80	RT16-100	RT16-125
Cold-pressed terminal	Piece (of string, etc)		1 2	1 2	1 2	1 2	1 2	1 2	1 2	1 2	1 2	1 2	1 2	1 2
	Non-prefabricated-tip cord	mm²	1/2.5 1/2.5	1/2.5 1/2.5	1.5/4 1.5/4	1.5/4 1.5/4	1.5/4 1.5/4	2.5/6 2.5/6	2.5/6 2.5/6	6/25 4/10	6/25 4/10	6/25 4/10	10/35 6/16	10/35 6/16
	Cord with the prefabricated tip		1/4 1/2.5	1/4 1/2.5	1.5/6 1.5/4	1.5/6 1.5/4	1.5/10 1.5/6	2.5/10 2.5/6	2.5/10 2.5/6	6/25 4/10	6/25 4/10	6/25 4/10	10/35 6/16	10/35 6/16
	Non-prefabricated-tip hard wire		1/4 1/4	1/4 1/4	1.5/6 1.5/6	1.5/6 1.5/6	1.5/6 1.5/6	2.5/10 2.5/10	2.5/10 2.5/10	6/25 4/10	6/25 4/10	6/25 4/10	10/35 6/16	10/35 6/16
Connection terminal screw size and			M3.5	M3.5	M3.5	M3.5	M4	M4	M4	M8	M8	M8	M10	M10
tightening torque (N•m)			0.8	0.8	0.8	0.8	1.2	1.2	1.2	4	4	4	6	6
AC coil power	50Hz	Attracting(VA)	70	70	70	70	110	110	110	200	200	200	200	200
		Holding(VA)	9	9	9.5	9.5	14	19	19	57	57	57	57	57
		Power(W)	1.8~2.7	1.8~2.7	3~4	3~4	3~4	3~4	3~4	6~10	6~10	6~10	6~10	6~10
Action (actuating)range			Pull-in voltage: 85%Us~110%Us; Release voltage: 20%Us~75%Us											
Basic parameters of the auxiliary contact			AC-15 : 0.95A 380V/400V DC-13 : 0.15A 220V/250V Ith : 10A											

5.2 Rated control source voltage Us and code for the NC7 ac contactor of 170A or lower

Coil voltage Us(V)	24	36	42	48	110	127	220	230	240	380	400	415	440	480	500	600	660
50Hz	B5	C5	D5	E5	F5	G5	M5	P5	U5	Q5	V5	N5	R5	T5	S5	X5	Y5
60Hz	B6	C6	D6	E6	F6	G6	M6	P6	U6	Q6	V6	N6	R6	T6	S6	X6	Y6
50/60Hz	B7	C7	D7	E7	F7	G7	M7	P7	U7	Q7	V7	N7	R7	T7	S7	X7	Y7

«Электро-Профи» - www.ep.ru

Type			NC7-115	NC7-150	NC7-170	NC7-205	NC7-250	NC7-300	NC7-410	NC7-475	NC7-620
Rated operational current (A)	380V/400V	AC-3	115	150	170	205	250	300	410	475	620
		AC-4	115	150	150	205	250	300	410	475	620
	660V/690V	AC-3	86	107	118	137	170	235	303	353	462
		AC-4	86	107	107	137	170	235	303	353	462
Appointed free air heat generation current (A)			200	200	275	275	315	380	450	630	800
Rated insulation voltage (V)			1000	1000	1000	1000	1000	1000	1000	1000	1000
Rated impulse withstand voltage (kV)			8	8	8	8	8	8	8	8	8
Rated making capacity			Making current: 10xIe(AC-3) or 12xIe(AC-4)								
Rated breaking capacity			Making/breaking current: 8xIe(AC-3) or 10xIe(AC-4)								
Short time withstand current (10s)			920	1200	1360	1640	2000	2400	3280	3800	4960
Controllable three-phase squirrel-cage motor power(AC-3)kW		380V/400V	55	75	90	110	132	160	200	265	335
		660V/690V	80	100	110	129	160	220	280	335	450
Intermittent-periodic-duty motor power(AC-4)kW		380V/400V	55	75	90	110	132	160	200	265	335
		600V/690V	80	100	110	129	160	220	280	335	450
Frequency of operation (times/h)	Electrical life	AC-3	1200	1200	600	600	600	600	600	600	600
		AC-4	120	120	120	60	60	60	60	60	60
	Mechanical life		1200	1200	600	600	600	600	600	600	600
Electrical life (ten thousand times)		AC-3	80	80	60	60	60	60	60	60	60
		AC-4	2	2	1	1	1	1	1	0.6	0.6
Mechanical life(ten thousand times)			600	600	600	600	600	600	600	600	600
Type of the fuse adapted			NT3-225	NT3-225	NT3-315	RT16-3	RT16-3	RT16-3	RT16-3	RT16-4	RT16-4
AC coil power	50Hz	Attracting(VA)	115	150	170						
		Holding(VA)	660	660	660						
		Power(W)	91.2	91.2	91.2						
			10-15	10-15	10-15						
Action (actuating)range			Pull-in voltage: 85%Us~110%Us; Release voltage: 20%Us~75%Us; NC7-250~620 Release voltage: 10%Us~75%Us								
Basic parameters of the auxiliary contact			AC-15: 0.95A 380V/400V DC-13: 0.15A 220/250V Ith: 10A								

Type	NC7-115	NC7-150	NC7-170	NC7-205	NC7-250	NC7-300	NC7-410	NC7-475	NC7-620
Piece (of string, etc)	2	2	2	1	1	1	1 (2)	2	2
Cable (mm^2)	10~50	10~50	10~50	95~150	120~185	185~240	240 (150)	150~185	185~240
Copper (mm)	-	-	-	-	-	-	30X5	40X5	50X5
Bolt	M10	M10	M10	M10	M10	M10	M10	M10	M12
Tightening torque(N·m)	10	10	10	10	10	10	10	10	14

5.3 Rated control source voltage Us and code for the NC7 ac contactor (205A - 620A) product coil

Coil code / Control voltage (V) / Contactor type	110	127	220	380	Power VA		Schematic drawing
					Start	Hold	
NC7-205	FG110	FG127	FG220	FG380	966	66	
NC7-250	FI110	FI127	FI220	FI380	1500	18	
NC7-300	FI110	FI127	FI220	FI380	1500	18	
NC7-410	FJ110	FJ127	FJ220	FJ380	1500	20	
NC7-475	FK110	FK127	FK220	FK380	1500	25	
NC7-620	FL110	FL127	FL220	FL380	1700	30	

Note: Products of NC7-250 or higher are duplex winding ones.

«Электро-Профи» - www.ep.ru

6. Derivative products

Derivative products	Contactor	Auxiliary module	Schematic drawing
Reversing contactor		 Mechanical interlocking mechanism	
Timing-delay contactor		 Air delay head	
Star-delta starter		 Air delay head	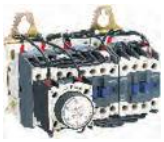
Magnetic starter		 Thermal relay	

«Электро-Профи» - www.ep.ru

7. Overall and mounting dimensions (mm)

NC7 09~38

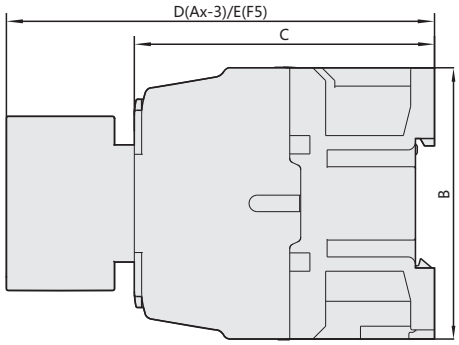

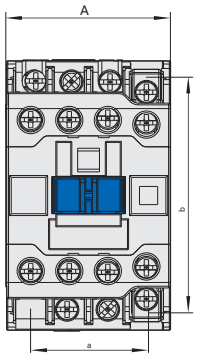

NC7 40~95

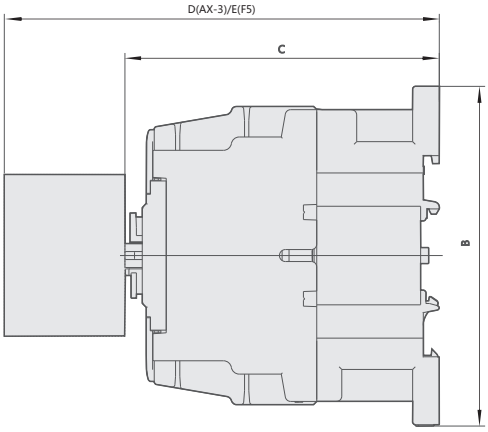

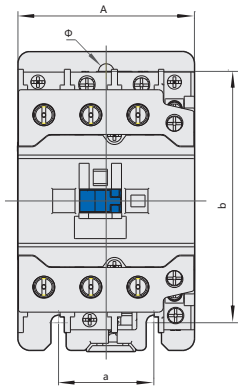

«Электро-Профи» - www.ep.ru

NC7 115~170

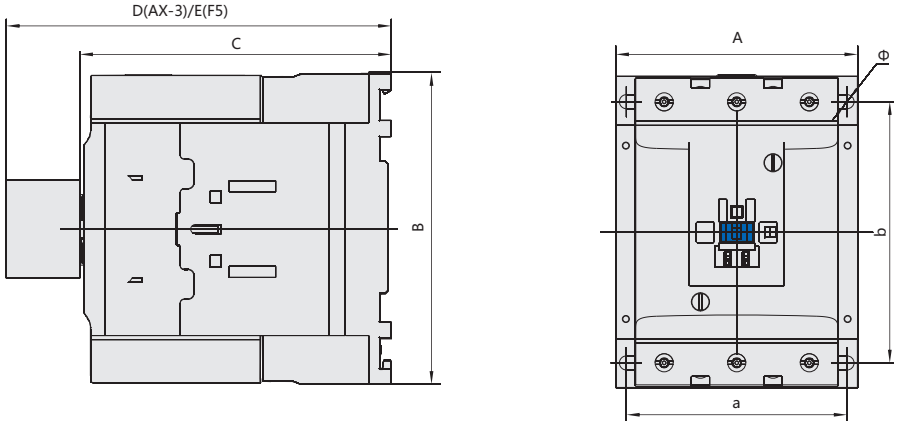

NC7 205~300

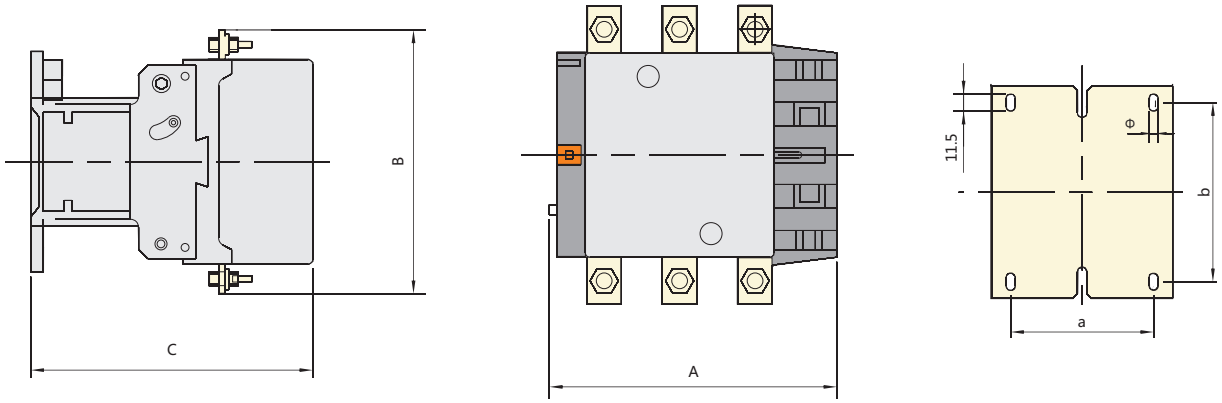

NC7 410~475

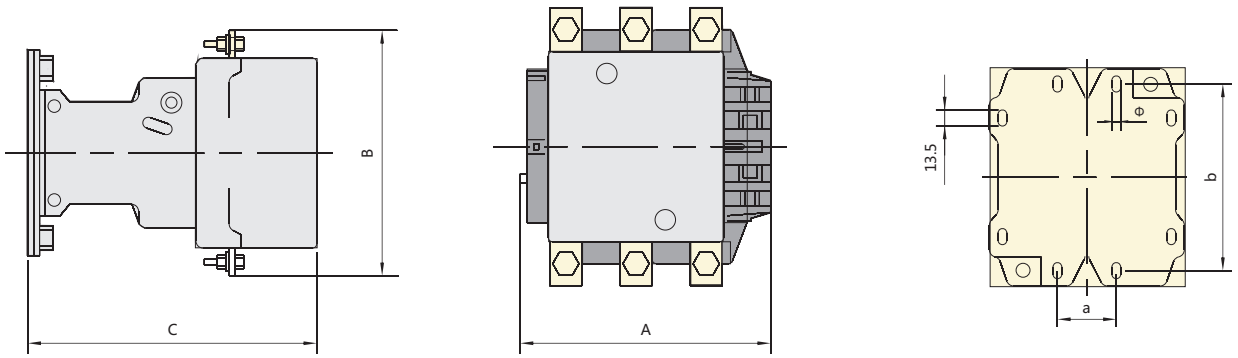

NC7 620

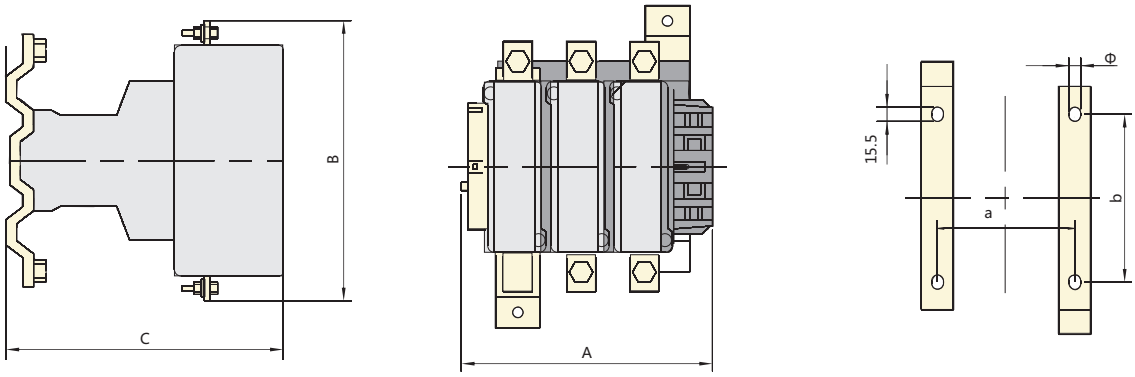

D

mm

Type	Amax	Bmax	Cmax	Dmax	Emax	a	b	Φ
NC7-0911~1211	45	75	88	124.5	144.5	34/35	50/60/61.8	4.5
NC7-1811~2211	45	75	91	127.5	147.5	34/35	50/60/61.8	4.5
NC7-2511	56	88	100	135.5	155.5	40	50/60/75	4.5
NC7-3211~3811	56	88	105	140.5	160.5	40	50/60/75	4.5
NC7-40~65	77	129	119	157.5	177.5	40.5	107	6.5
NC7-80~95	87	129	127	165.5	185.5	40.5	107	6.5
NC7-115~170	122	157	158	192.5	212.5	96~110	130	7
NC7-205	171	197	186			80	110~120	6.5
NC7-250	202	203	215			96	110~120	6.5
NC7-300	213	206	220			96	110~120	6.5
NC7-410	213	206	220			80	170~180	8.5
NC7-475	233	238	233			80	170~180	8.5
NC7-620	309	304	256			180	180~190	10.5

«Электро-Профи» - www.ep.ru

8. Ordering information

The following to be indicated when ordering:

8.1 Full name and type of the contactor

8.2 Rated control source voltage and frequency or size code of the coil

8.3 If you need to order the AX-3 auxiliary contactor block, F5 air delay head or standard rail track for the product, you should further give a clear indication; For products of 205A or higher, the auxiliary contactor blocks will not be attached for lack of indication such as the number of those blocks and how they are combined.

8.4 When the NC7 115A-170A products leave the factory, the body is not provided with the dust cap. It is hoped users will further give a clear indication when they need it.

8.5 Amount on order

8.6 The 38A-or-lower derivative N conventional products triple poles are provided in the mode of reversible wiring, so you must give clear indication for your special wiring mode.

8.7 The 205A-or-higher derivative NS conventional products triple poles are provided in the mode of reversible wiring, so you must give clear indication for your special wiring mode.

8.8 Order Sample:
10 units of NC7-0911 ac contacts, coil voltage 220V/50Hz, with 5 pieces of AX-3/22
10 units of NC7-300 ac contacts, coil voltage 220V/50Hz, with 10 pieces of AX-3/22 further attached

Mechanical interlocking mechanism to be order	Writing format for ordering
NC7-205 combined with NC7-620 Aertical installation, Mechanical interlocking mechanism, 30 sets	NJLc-GL 30 sets
Two NC7-250 combination in a mode of Horizontal installation, Mechanical interlocking mechanism, 30 sets	NJLc-HH 30 sets

«Электро-Профи» - www.ep.ru



NC6 AC Contactor, 6~9A

1. General

1.1 Certificates: CE, VDE, UKrSEPRO, EAC, UL;

1.2 Electric ratings: AC50/60Hz, up to 690V, up to 9A;

1.3 Application: remotely makes and breaks circuit, protect circuit from overload assembling with proper thermal relay;

1.4 Utilization category: AC-1, AC-3, AC-4;

1.5 Ambient temperature: -5℃~+40℃;

1.6 Altitude: ≤2000m;

1.7 Mounting category: Ⅲ

1.8 Mounting conditions: inclination between mounting plane and vertical plane not exceed ±30°

1.9 Standard: IEC/EN 60947-4-1

1.10 IP00

2. Type designation

N C 6 - □ □ □ □ □

- Blank: Screw-clamp connection
  K: With solder "pins" for direct connection to printed circuit boards.
- Number of contacts
  10: 3N/O main contacts, 1N/O auxiliary contact
  01: 3N/O main contacts. 1N/C auxiliary contact
  04: 4N/O main contacts
  08: 2N/O+2N/C main contacts
- Rated operational current (AC-3, 380V)
- Design sequence No.
- Contactor
- Company code

D

«Электро-Профи» - www.ep.ru

3. Technical data

3.1 Contactor

★ 3P contactor AC coil operation

Items		Model	NC6-06	NC6-06-K	NC6-09	NC6-09-K
						
Rated cinventional heating current (A)	AC-1		20		20	
Rated operational current (A)	AC-3/AC-4	380/400V	6		9	
		660/690V	3.8		5	
Power of motor	kW (AC-3)	220/230V	1.5		2.2	
		380/400V	2.2		4	
		660/690V	3		4	
	hp	240V	2		2	
		400V	3		3	
		600V	3		3	
Operating cycles (operations/h)	Electrical	AC-3	1,200		1,200	
		AC-4	300		300	
	Mechanical		3,600		3,600	
Electrical life (×10³ operations)		AC-3	1,200		1,200	
		AC-4	25		25	
Mechanical life (×10⁶ operations)			10		10	
Matching fuse model			RT16-16		RT16-20	

★ 4P contactor AC operation

Items	Model		NC6-06	NC6-09
				
Rated operational current (A)	AC-1		20	20
	AC-3/AC-4	380/400V	6	9
		660/690V	3.8	5
Power of motor	kW (AC-3)	220V/230V/240V	1.5	2.2
		380/400V	2.2	4
		660/690V	3	4
	hp	240V	-	2
		400V	-	3
		600V	-	3
Operating cycles (operations/h)	Electrical	AC-3	1,200	1,200
		AC-4	300	300
	Mechanical		3,600	3,600
Electrical life (×10³ operations)		AC-3	1,200	1,200
		AC-4	25	25
Mechanical life (×10⁶ operations)			10	10
Matching fuse model			RT16-16	RT16-20

3.2 AC coil specifications

Items	Model	NC6-06	NC6-09
Rated control voltage (V AC)		24, 36, 48, 110, 127, 220, 230, 380, 400	
Coil power (VA)	In-rush	30	30
	Sealed	4.5	4.5

«Электро-Профи» - www.ep.ru

4. Terminal connection

Model	Number of piece	Conductor (mm^2)	Screw size	Tightening torque (N·m)
NC6-06	1	2.5	M3	0.5
NC6-09	1	2.5	M3	0.5

5. Accessories

5.1 Auxiliary contact

Model	Auxiliary contact		
	Model of assembled contact	Conventional heating current (A)	Control capacity
NC6-06	NCF6-20; NCF6-02 NCF6-11; NCF6-40 NCF6-31; NCF6-22 NCF6-13; NCF6-04 	10	AC-15: 380/400V/0.95A DC-13: 220/250V/0.15A
NC6-09	NCF6-20; NCF6-02 NCF6-11; NCF6-40 NCF6-31; NCF6-22 NCF6-13; NCF6-04	10	AC-15: 380/400V/0.95A DC-13: 220/250V/0.15A

5.2 Assembly with thermal over-load relay

Model of contactor	Assembled thermal over-load relay			
	Model	Rated current (A)	Recommended fuse type	
			aM	gG
		0.1~0.16	0.25	2
		0.16~0.25	0.5	2
		0.25~0.4	1	2
		0.4~0.63	1	2
		0.63~1	2	4
		1~1.6	2	4
		1.25~2	4	6
		1.6~2.5	4	6
		2.5~4	6	10
		4~6	8	16
		5.5~8	12	20
NC6-09	NR2-11.5	7~10	12	20
		9~13	16	25

6. Overall and mounting dimensions (mm)

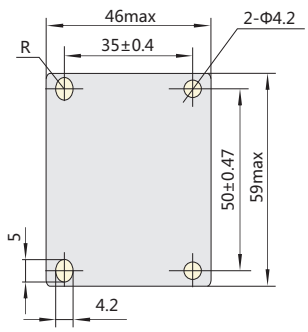

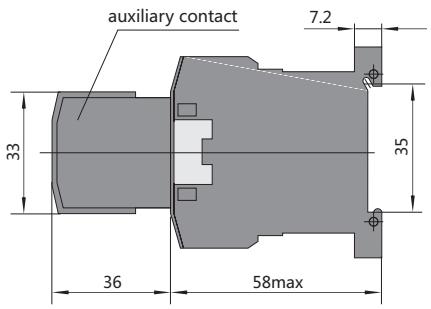

«Электро-Профи» - www.ep.ru



NC1 AC Contactor, 9~95A

1. General

1.1 Certificates: CE, KEMA, VDE, EK, EAC, RCC, UL;

1.2 Electric ratings: AC50Hz (or 60Hz), 690V, up to 95A;

1.3 Application: remote making & breaking circuits;
protect circuit from over-load when assembling with thermal over-load relay;
Frequent start-up and control of AC contactor;

1.4 Utilization category: AC-3, AC-4;

1.5 Altitude: ≤2000m;

1.6 Ambient temperature: -5℃~+40℃;

1.7 Mounting category: Ⅲ

1.8 Mounting conditions:
inclination between the mounting plane and the vertical plane should not exceed ±5°

1.9 Standard: IEC/EN 60947-4-1

2.0 IP10

2. Type designation

N C 1-□□ □□ -□

- Company code
- Contactor
- Design sequence No.
- Basic specification, expressed with the rated operational current 400(380)V, AC-3
- Number of contacts
  - 10: 3 N/O main contacts+1 N/O auxiliary contact (9A,12A,18A,25A,32A)
  - 01: 3 N/O main contacts+1 N/C auxiliary contact (9A,12A,18A,25A,32A)
  - 11: 3 N/O main contacts+1 N/O and 1N/C auxiliary contact (40A,50A,65A,80A,95A)
  - 04: 4 N/O main contacts (9A,12A,25A,40A,50A,65A,80A,95A)
  - 08: 2 N/O and 2N/C main contacts (9A,12A,25A,40A,50A,65A,80A,95A)
- Z: DC coil
  N:Reversing/change-over type contactor (There is no such type as NC1-**Z (DC coil) and NC1-**08 (2N/O+2N/C)).

«Электро-Профи» - www.ep.ru

3. Curves

Electric life curves (AC-3)

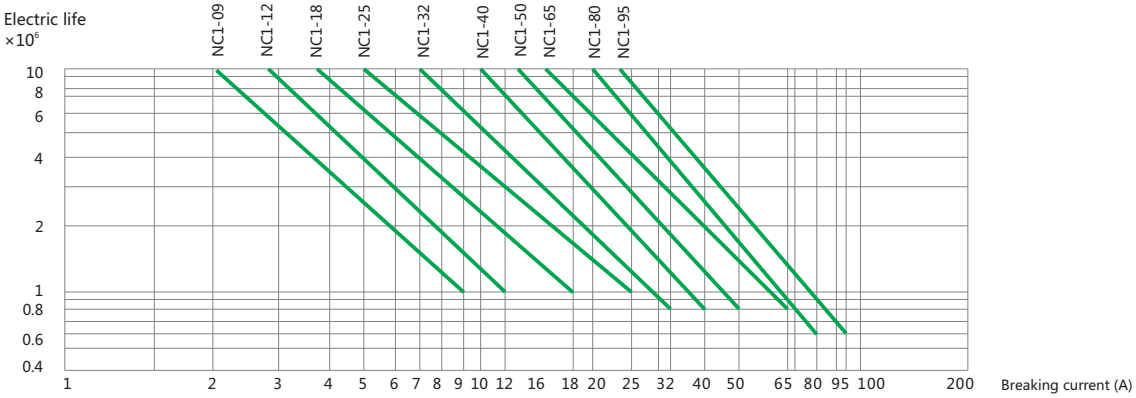

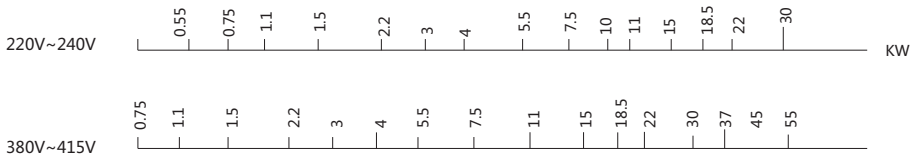

Rated outputs of three-phase motors (50Hz AC-3)

Electric life curves (AC-4)

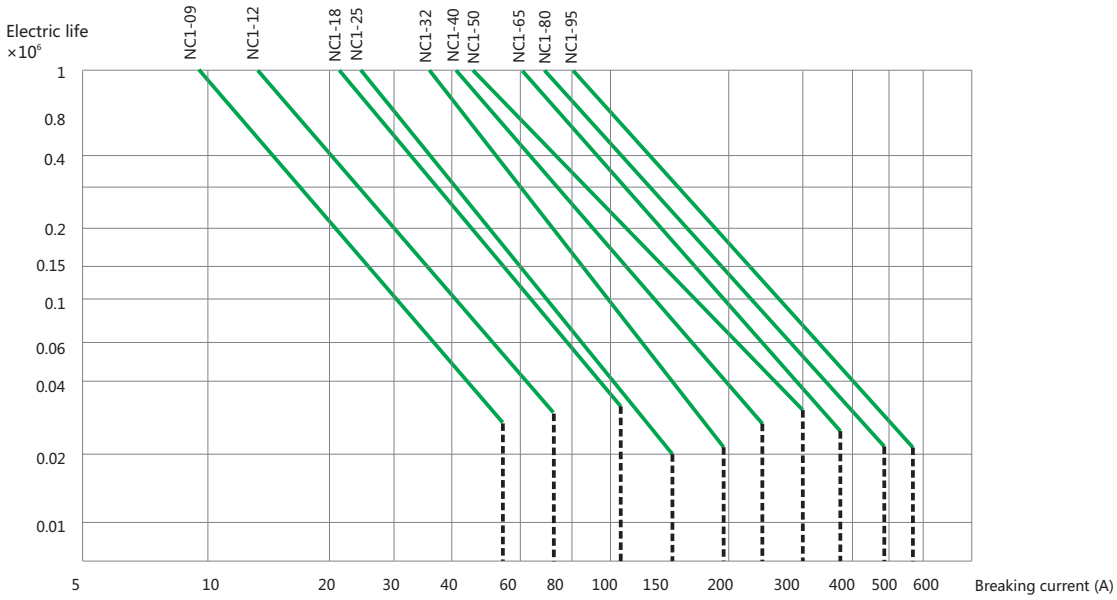

Example:
Request to control the start of three-phase motors
main technical parameter of three-phase motors: P=5.5kW, Ue=400V(380V), Ie=11A, Ic6×Ie=66A
The electric life span of request: 2,00,000 operations
the contactor should be NC1-32 according to the curves above

«Электро-Профи» - www.ep.ru

4. Technical data

4.1 AC coil contactor

★ AC coil operation

Items / Model			NC1-09	NC1-12	NC1-18	NC1-25
Frame			Frame 1 (3P, 4P)		Frame 2 (3P)	Frame 3 (3P, 4P)
						
Rated conventional heating current (A) AC-1			25	25	32	45
Rated operational current (A)	400(380)V	AC-3	9	12	18	25
		AC-4	3.5	5	7.7	8.5
	690(660)V	AC-3	6.6	8.9	12	18
		AC-4	1.5	2	3.8	4.4
Rated insulation voltage (V AC)			690	690	690	690
Power of controlled 3-phase cage motor (AC-3)	kW	230(220)V AC	2.2	3	4	5.5
		400(380)V AC	4	5.5	7.5	11
		690(660)V AC	5.5	7.5	10	15
	hp	200V AC	3	5	7.5	7.5
		240V AC	3	5	7.5	10
		460V AC	5	7.5	10	15
		600V AC	5	7.5	10	15
Operating frequency (operations/h)	Electrical	AC-3	1,200	1,200	1,200	1,200
		AC-4	300	300	300	300
	Mechanical		3,600	3,600	3,600	3,600
Electrical life ($\times 10^3$ operations)	AC-3		1,000	1,000	1,000	1,000
	AC-4		200	200	200	200
Mechanical life ($\times 10^6$ operations)			10	10	10	10
Matched fuse type			RT16-20	RT16-20	RT16-32	RT16-40

★ AC coil operation, reversing type

Items / Model			NC1-09N	NC1-12N	NC1-18N	NC1-25N
Frame			Frame 1 (3P, 4P)		Frame 2 (3P)	Frame 3 (3P, 4P)
Rated conventional heating current (A) AC-1			25	25	32	45
AC-4	Ie(A)	380/400V	3.5	5	7.7	8.5
		660/690V	1.5	2	3.8	4.4
	Pe(kW)	380/400V	1.5	2.2	3	4
		660/690V	1.1	1.5	3.7	4
Power of controlled 3-phase cage motor (AC-3)	hp	200V	3	5	7.5	7.5
		240V	3	5	7.5	10
		460V	5	7.5	10	15
		600V	5	7.5	10	15

★ AC coil operation, change-over type

Items / Model			NC1-09N	NC1-12N	NC1-25N
Frame			Frame 1 (4P)	Frame 2 (4P)	Frame 3 (4P)
Rated conventional heating current (A) AC-1			25	25	45
AC-4	Ie(A)	380/400V	3.5	5	8.5
		660/690V	1.5	2	4.4
	Pe(kW)	380/400V	1.5	2.2	4
		660/690V	1.1	1.5	4
Power of controlled 3-phase cage motor (AC-3)	hp	200V	3	5	7.5
		240V	3	5	10
		460V	5	7.5	15
		600V	5	7.5	15

«Электро-Профи» - www.ep.ru

	NC1-32	NC1-40	NC1-50	NC1-65	NC1-80	NC1-95
	Frame 4 (3P)	Frame 5 (3P, 4P)			Frame 6 (3P, 4P)	
						
	50	60	80	80	110(Can be customized for 125)	110(Can be customized for 125)
	32	40	50	65	80	95
	12	18.5	24	28	37	44
	21	34	39	42	49	49
	7.5	9	12	14	17.3	21.3
	690	690	690	690	690	690
	7.5	11	15	18.5	22	25
	15	18.5	22	30	37	45
	18.5	30	37	37	45	45
	10	15	15	20	25	30
	15	20	20	25	30	30
	20	25	30	40	40	50
	20	25	30	40	40	50
	600	600	600	600	600	600
	300	300	300	300	300	300
	3,600	3,600	3,600	3,600	3,600	3,600
	800	800	600	600	600	600
	200	150	150	150	100	100
	8	8	8	8	6	6
	RT16-50	RT16-63	RT16-80	RT16-80	RT16-100	RT16-125

	NC1-32N	NC1-40N	NC1-50N	NC1-65N	NC1-80N	NC1-95N
	Frame 4 (3P)	Frame 5 (3P, 4P)			Frame 6 (3P, 4P)	
	50	60	80	80	110(Can be customized for 125)	110(Can be customized for 125)
	12	18.5	24	28	37	44
	7.5	9	12	14	17.3	21.3
	5.5	7.5	11	15	18.5	22
	5.5	7.5	11	11	15	18.5
	10	15	15	20	25	30
	15	20	20	25	30	30
	20	25	30	40	40	50
	20	25	30	40	40	50

	NC1-40N	NC1-50N	NC1-65N	NC1-80N	NC1-95N
	Frame 4 (4P)	Frame 5 (4P)		Frame 6 (4P)	
	60	80	80	110(Can be customized for 125)	110(Can be customized for 125)
	18.5	24	28	37	44
	9	12	14	17.3	21.3
	7.5	11	15	18.5	22
	7.5	11	11	15	18.5
	15	15	20	25	30
	20	20	25	30	30
	25	30	40	40	50
	25	30	40	40	50

«Электро-Профи» - www.ep.ru

4.2 DC coil contactor

★ DC coil operation(24V,110V,220V)

Items / Model			NC1-09Z	NC1-12Z	NC1-18Z	NC1-25Z
Frame			**Frame 1 (3P, 4P)**		**Frame 2 (3P)**	**Frame 3 (3P, 4P)**
						
Rated conventional heating current (A) AC-1			25	25	32	45
Rated operational current (A)	400(380)V	AC-3	9	12	18	25
		AC-4	3.5	5	7.7	8.5
	690(660)V	AC-3	6.6	8.9	12	18
		AC-4	1.5	2	3.8	4.4
Conventional heating current (A)			25	25	32	45
Rated insulation voltage (V AC)			690	690	690	690
Power of controlled 3-phase cage motor (AC-3)	kW	230(220)V AC	2.2	3	4	5.5
		400(380)V AC	4	5.5	7.5	11
		690(660)V AC	5.5	7.5	10	15
Operating frequency (operations/h)	Electrical	AC-3	1,200	1,200	1,200	1,200
		AC-4	300	300	300	300
	Mechanical		3,600	3,600	3,600	3,600
Electrical life ($\times 10^3$ operations)	AC-3		1,000	1,000	1,000	1,000
	AC-4		200	200	200	200
Mechanical life ($\times 10^6$ operations)			10	10	10	10
Matched fuse type			RT16-20	RT16-20	RT16-32	RT16-40

«Электро-Профи» - www.ep.ru

	NC1-32Z	NC1-40Z	NC1-50Z	NC1-65Z	NC1-80Z	NC1-95Z
	Frame 4 (3P)	Frame 5 (3P, 4P)			Frame 6 (3P, 4P)	
						
	50	60	80	80	110(Can be customized for 125)	110(Can be customized for 125)
	32	40	50	65	80	95
	12	18.5	24	28	37	44
	21	34	39	42	49	49
	7.5	9	12	14	17.3	21.3
	50	60	80	80	110(Can be customized for 125)	110(Can be customized for 125)
	690	690	690	690	690	690
	7.5	11	15	18.5	22	25
	15	18.5	22	30	37	45
	18.5	30	37	37	45	45
	600	600	600	600	600	600
	300	300	300	300	300	300
	3,600	3,600	3,600	3,600	3,600	3,600
	800	800	600	600	600	600
	200	150	150	150	100	100
	8	8	8	8	6	6
	RT16-50	RT16-63	RT16-80	RT16-80	RT16-100	RT16-125

D

«Электро-Профи» - www.ep.ru

5. Accessories

5.1 Accessories

Items		Model	NC1-09	NC1-12	NC1-18	NC1-25
AC coil	Coil power	In-rush (VA)	70	70	70	110
		Sealed (VA)	9	9	9.5	14
		Power (W)	1.8~2.7	1.8~2.7	3~4	3~4
	Operation range	Operation voltage	(85%~110%) Us			
		Drop-out voltage	(20%~75%) Us			
	Coil voltage(50Hz,60Hz, 50/60Hz)(V)		24,36,48,110,127,220,230,240,380,415,440,480,500,600,660			
DC coil	Coil power(W)		9	9	11	11
	Operation range	Pick-up voltage	(85%~110%) Us			
		Drop-out voltage	(10%~75%) Us			
	Coil voltage (V)		24,36,48,110,220			

F4 auxiliary contact

F4 - □ □
- Number of N/C auxiliary contact
- Number of N/O auxiliary contact
- Auxiliary contact assembly

F5 auxiliary contact

F5 - □ □
- 0: time-delay range, 0.1s~3s
  2: time-delay range, 0.1s~30s
  4: time-delay range, 10s~180s
- T: making time-delay; D: breaking time-delay
- Time-delay module

NCF1-11C lateral side auxiliary contact

NCF1-11C
- Lateral side
- 1 N/C contact
- 1 N/O contact
- Design sequence No.
- Auxiliary contact assembly
- Contactor
- Company code



«Электро-Профи» - www.ep.ru

	NC1-32	NC1-40	NC1-50	NC1-65	NC1-80	NC1-95
	110	300	300	300	300	300
	14	57	57	57	57	57
	3~4	6~10	6~10	6~10	6~10	6~10
	(85%~110%) Us					
	(20%~75%) Us					
	24,36,48,110,127,220,230,240,380,415,440,480,500,600					
	11	20	20	20	20	20
	(85%~110%) Us					
	(10%~75%) Us					

Picture	Model	Configuration of contacts	
		Number of N/O contact	Number of N/C contact
	F4-20	2	0
	F4-11	1	1
	F4-02	0	2
	F4-40	4	0
	F4-31	3	1
	F4-22	2	2
	F4-13	1	3
	F4-04	0	4

Picture	Model	Time-delay range	Number of time-delay contacts
	F5-T0	0.1s~3s	N/O+N/C
	F5-T2	0.1s~30s	N/O+N/C
	F5-T4	10s~180s	N/O+N/C
	F5-D0	0.1s~3s	N/O+N/C
	F5-D2	0.1s~30s	N/O+N/C
	F5-D4	10s~180s	N/O+N/C
	NCF1-11C NC1-40Z-95Z (DC coil) cannot be installed with such accessory	1	1

 SR2-A Surge suppressor	Suppression voltage range	AC 24V~48V	SR2-A 24V~48V	Able to be used for the products of 9A~38A or lower
		AC 100V~250V	SR2-A 100V~250V	
		AC 380V~440V	SR2-A 380V~440V	
 SR2-C Surge suppressor		AC 24V~48V	SR2-C 24V~48V	Able to be used for the products of 40A~95A or lower
		AC 100V~250V	SR2-C 100V~250V	
		AC 380V~440V	SR2-C 380V~440V	

«Электро-Профи» - www.ep.ru

5.2 Derived products when the contactor is assembled with following accessory module

Derived products	Contactor	Accessorial modular	Picture
Time-delay contactor	 +	 Time-delay block →	
Reversing contactor	 +	 Mechanical interlock →	
Magnetic starter	 +	 Thermal relay →	
AC contactor for capacitor switching	 +	 Current-limiting contact assembly →	
Star-delta starter	 +	 Time-delay block +  Auxiliary contact assembly →	

Note: NC1-09Z-95Z cannot form the reversing contactor.

«Электро-Профи» - www.ep.ru

5.3 Assembly with thermal over-load relay

Model of contactor	Assembled thermal over-load relay			
	Model	Rated current (A)	Recommended fuse type	
			aM	gG
NC1-09 NC1-12 NC1-18 NC1-25 NC1-32	 NR2-25	0.1~0.16	0.25	2
		0.16~0.25	0.5	2
		0.25~0.4	1	2
		0.4~0.63	1	2
		0.63~1	2	4
		1~1.6	2	4
		1.25~2	4	6
		1.6~2.5	4	6
		2.5~4	6	10
		4~6	8	16
		5.5~8	12	20
		7~10	12	20
		9~13	16	25
		12~18	20	35
		17~25	25	50
NC1-32	 NR2-36	23~32	40	63
		28~36	40	80
NC1-40 NC1-50 NC1-65 NC1-80 NC1-95	 NR2-93	23~32	40	63
		30~40	40	100
		37~50	63	100
		48~65	63	100
		55~70	80	125
		63~80	80	125
		80~93	100	160

D

«Электро-Профи» - www.ep.ru

5.4 Assembly with electronic overload relay

Model of contactor	Model	Rated	Range of setting	Recommended
		Assembled thermal current (A)	Over-load relay current (A)	Fuse type
NC1-09		1.2	0.6~1.2	RT36-4 (NT00-4)
		2.4	1.2~2.4	RT36-6 (NT00-6)
		4	2~4	RT36-10 (NT00-10)
		8	4~8	RT36-16 (NT00-16)
NC1-12		10	5~10	RT36-20 (NT00-20)
		12	7~12	RT36-25 (NT00-25)
NC1-18		20	10~20	RT36-40 (NT00-40)
NC1-25	NRE8-25	25	20~25	RT36-50 (NT00-50)
NC1-32		32	22~32	RT36-80 (NT00-80)
NC1-40		4	2~4	RT36-10 (NT00-10)
		8	4~8	RT36-16 (NT00-16)
		10	5~10	RT36-20 (NT00-20)
		20	10~20	RT36-40 (NT00-40)
	NRE8-40	40	20~40	RT36-80 (NT00-80)
NC1-40		65	30~65	RT36-160 (NT00-160)
NC1-50				
NC1-65				
NC1-80		100	50~100	RT36-200 (NT1-200)
NC1-95	NRE8-100			

6. Technical information

6.1 Terminal connection

Model	Cabling cross section(Cu)				Screw size	Tightening torque (N·m)
	Number of piece	Flexible cable with cold-pressed socket (mm^2)	Flexible cable without cold-pressed socket (mm^2)	Inflexible cable (mm^2)		
NC1-09	1	1/2.5	1/4	1/4	M3.5	0.8
	2	1/2.5	1/2.5	1/4	M3.5	0.8
NC1-12	1	1/2.5	1/4	1/4	M3.5	0.8
	2	1/2.5	/	1/4	M3.5	0.8
NC1-18	1	1.5/4	1.5/6	1.5/6	M3.5	0.8
	2	1.5/4	1.5/4	1.5/6	M3.5	0.8
NC1-25	1	1.5/4	1.5/10	1.5/6	M4	1.2
	2	1.5/4	1.5/6	1.5/6	M4	1.2
NC1-32	1	2.5/6	2.5/10	2.5/10	M4	1.2
	2	2.5/6	2.5/6	2.5/10	M4	1.2
NC1-40	1	6/25	6/25	6/25	M8	4
	2	4/10	4/10	4/10	M8	4
NC1-50	1	6/25	6/25	6/25	M8	4
	2	4/10	4/10	4/10	M8	4
NC1-65	1	6/25	6/25	6/25	M8	4
	2	4/10	4/10	4/10	M8	4
NC1-80	1	10/35	10/35	10/35	M10	ⓘ 6 ◎ 10
	2	6/16	6/16	6/16	M10	ⓘ 6 ◎ 10
NC1-95	1	10/35(50)	10/35(50)	10/35(50)	M10	ⓘ 6 ◎ 10
	2	6/16	6/16	6/16	M10	ⓘ 6 ◎ 10

«Электро-Профи» - www.ep.ru

7. Overall and mounting dimensions (mm)

NC1-09~32



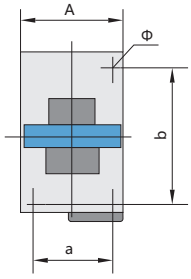

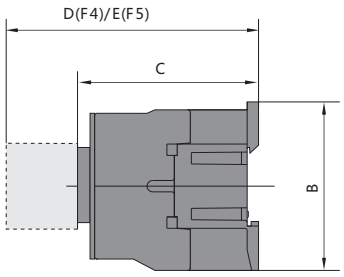

NC1-40~95



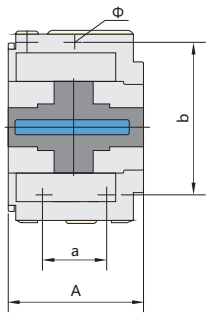

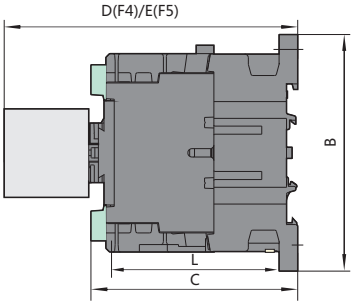

NC1-09Z~32Z



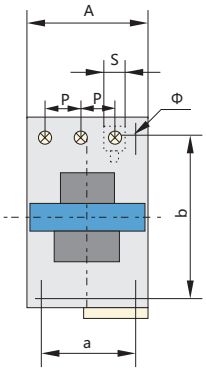

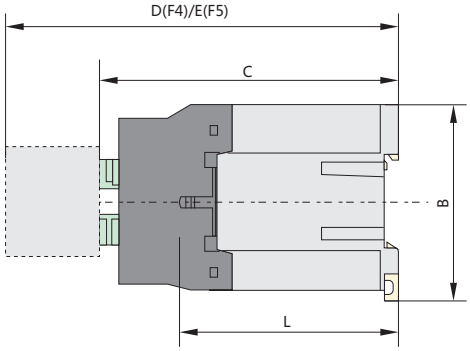

NC1-40Z~95Z

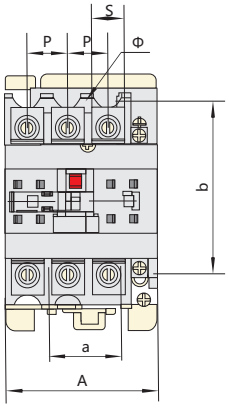

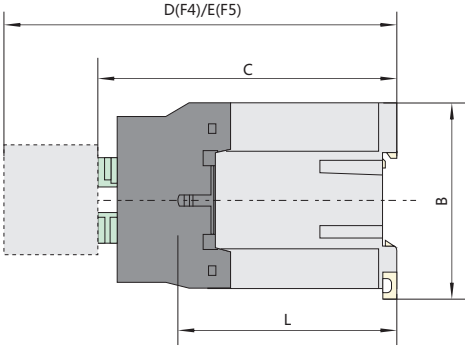

D

«Электро-Профи» - www.ep.ru

Model	A max	B max	C max	D max	E max	a	b	Φ	L	P	S
NC1-09(Z)~12(Z)	47	76	82(116)	120.5(154.5)	140.5(174.5)	34/35	50/60	4.5	60(95)	10.5	8.6
NC1-18(Z)	47	76	87(122)	125.5(160.5)	145.5(180.5)	34/35	50/60	4.5	61(96)	11.3	10.4
NC1-25(Z)	57	86	95(131)	133.5(169.5)	153.5(189.5)	40	48	4.5	70(107)	13.2	11.7
NC1-32(Z)	57	86	100(138)	138.5(176.5)	158.5(196.5)	40	48	4.5	71.6(120)	14.5	13
NC1-4011(Z)~6511(Z)	77	129	116(173)	154.5(211.5)	174.5(231.5)	40	105	6.5	78(135)	20	8.6
NC1-4004~6504	84	129	116	154.5	174.5	40	105	6.5	78(135)	20	8.6
NC1-4008~6508	84	129	127	154.5	174.5	40	105	6.5	78	20	8.6
NC1-8011(Z)~9511(Z)	87	129	127(188)	165.5(226.5)	185.5(246.5)	40	105	6.5	83(140)	23.5	12
NC1-8004~9504	96	129	122	160.5	180.5	40	105	6.5	83	23.5	12
NC1-8008~9508	96	129	135	160.5	180.5	40	105	6.5	83	23.5	12

NC1-09~32N



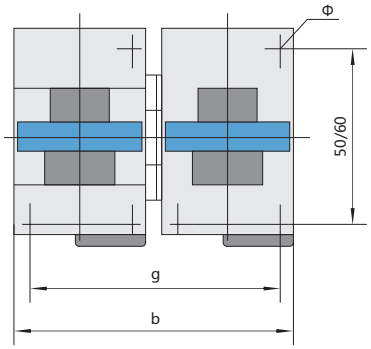

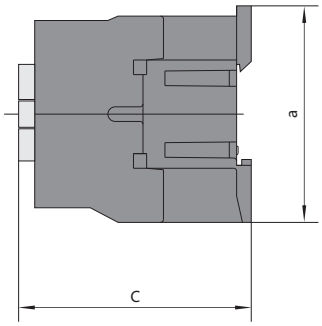

NC1-40~95N



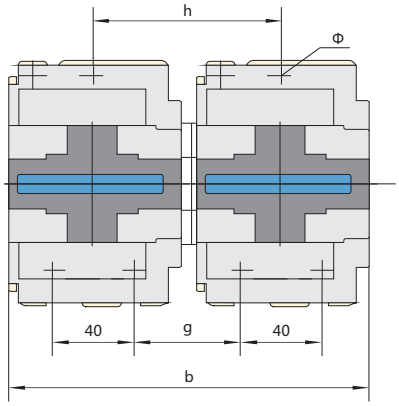

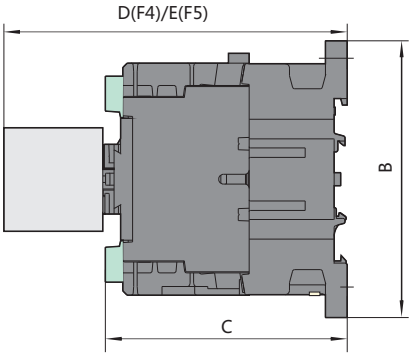

Contactor model	a	b	c	g	h	Φ
NC1-09N~12N	86	109	82	95	--	4.5
NC1-18N	86	109	87	95	--	4.5
NC1-25N	93	131	95	111	--	4.5
NC1-32N	93	131	100	111	--	4.5
NC1-40N~65N(3P)	129	165	116	50	90	6.5
NC1-80N~95N(3P)	129	187	127	57	96	6.5
NC1-40N~65N(4P)	129	180	116	50	90	6.5
NC1-80N~95N(4P)	129	205	127	57	96	6.5

Note:

1. L: in main circuit, the distance between terminals and plate;
2. P: in main circuit, the distance between two phases;
3. S: in main circuit, the width of contacting plate.

«Электро-Профи» - www.ep.ru



NC1-2504Z(N) DP
NC1-4004Z(N) DP
Contactor

1. General

NC1-2504Z DP, NC1-4004Z DP AC contactor (hereinafter called contactor) is developed from NC1-2504, NC1-4004 ac contactor model, is mainly used for DC 48V, rated operation voltage up to 690V, rated current 25A and 40A circuit for remote making and breaking circuits. And apply to match with thermal overload relays electromagnetic starter; can meet reversible function matching with same model of NC1-2504, NC1-4004 AC contactor.

Standard: IEC60947-4-1

2. Type designation

N C 1-□□ 04 Z(N) DP

- Customised
- Reversing AC / DC contactor
- DC coil
- 4 N/O main contacts
- Basic specification, expressed with the rated operational current (380V, AC-3)
- Design Sequence No.
- Contactor
- Company Code

3. Operating conditions

3.1 Ambient temperature: -5℃~+40℃, average does not over +35℃

3.2 Altitude: bellow to 2000m

3.3 Humidity: +40℃ max, relative humidity is no more than 50%, lower temperature allows a higher relative humidity.

3.4 Pollution degree: 3

3.5 Installation category: Ⅲ

3.6 Installation conditions: the mounting surface and the vertical gradient of not more than ± 5°. Product should be installed and used for no apparent shake, shock and vibration

3.7 IP10

D

«Электро-Профи» - www.ep.ru

4. Technical data

Model			NC1-2504Z DP			NC1-4004Z DP		
Rated current (A)	380V~400V	AC-3	25			40		
		AC-4	8.5			18.5		
	660V~690V	AC-3	18			34		
		AC-4	4.4			9		
Rated conventional current (Ith)(A)			40			60		
M Rated insulation voltage (V)			690V					
Power of controlled 3-phase cage motor (AC-3)kw		220V/230V	5.5			11		
		380V/400V	11			18.5		
		660V/690V	15			30		
Operation frequency		Electrical life (AC-4)	300					
		Mechanical life	1800					
Electrical life (AC-4)X10^4		400V (without derating)	1.5					
Mechanical life X10^4			50					
Coil voltage			DC 48V			DC48V		
Matched fuse model			RT16-40			RT16-63		
Cold end	pc	mm^2	1	2		1	2	
	Non-prefabricated cord ends		'1.5/4	1.5/4		6/25	4/10	
	Prefabricated cord ends		1.5/10	1.5/6		6/25	4/10	
	Non-prefabricated hard-wine ends		1.5/6	1.5/6		6/25	4/10	
Termial screw size			M4	M4	M4	M8	M8	M8
Tighting torque (N.M)			1.2	1.2	1.2	4	4	4
Operation range			Pick-up voltage:DC 40V-60V			Pick-up voltage:DC 40V-60V		
			Drop-out voltage:DC 4.8V-16V			Drop-out voltage:DC 4.8V-16V		

«Электро-Профи» - www.ep.ru

NC1-2504ZN DP			NC1-4004ZN DP		
25			40		
8.5			18.5		
18			34		
4.4			9		
40			60		
5.5			11		
11			18.5		
15			30		
20					
DC48V/ AC220V			DC48V/ AC220V		
RT16-40			RT16-63		
1	2		1	2	
1.5/4	1.5/4		6/25	4/10	
1.5/10	1.5/6		6/25	4/10	
1.5/6	1.5/6		6/25	4/10	
M4	M4	M4	M8	M8	M8
1.2	1.2	1.2	4	4	4
Pick-up voltage:DC40V-60V/AC 85%Us-110%Us			Pick-up voltage:DC40V-60V/AC 85%Us-110%Us		
Drop-out voltage:DC 4.8V-16V/AC 20%Us-75%Us			Drop-out voltage:DC 4.8V-16V/AC 20%Us-75%Us		

D

«Электро-Профи» - www.ep.ru

5. Overall and mounting dimensions (mm)

NC1-2504Z DP

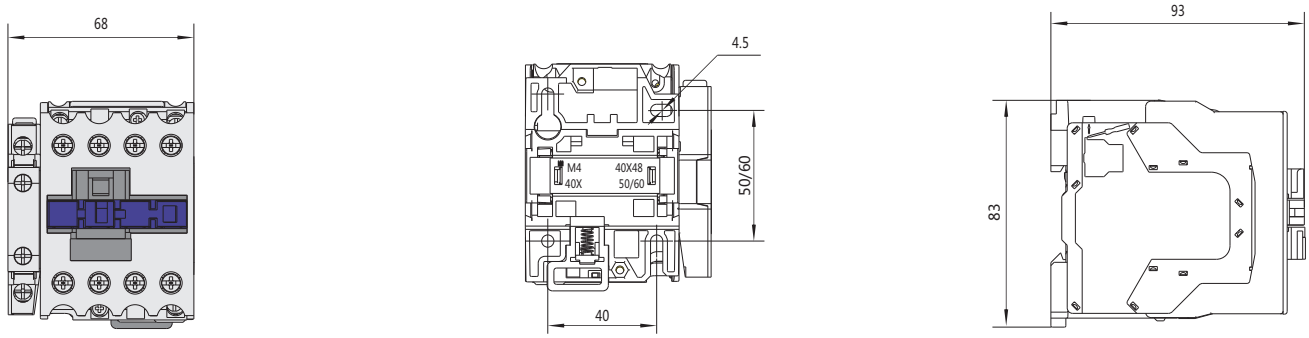

NC1-2504ZN DP

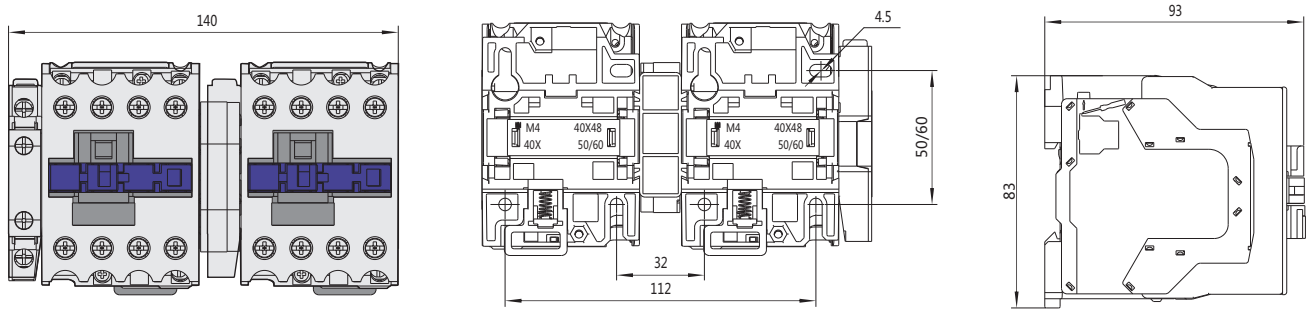

NC1-4004Z DP

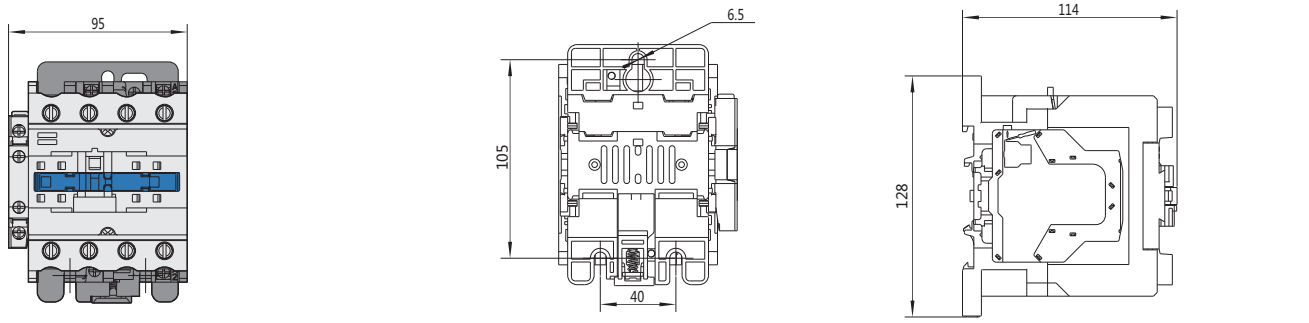

NC1-4004ZN DP

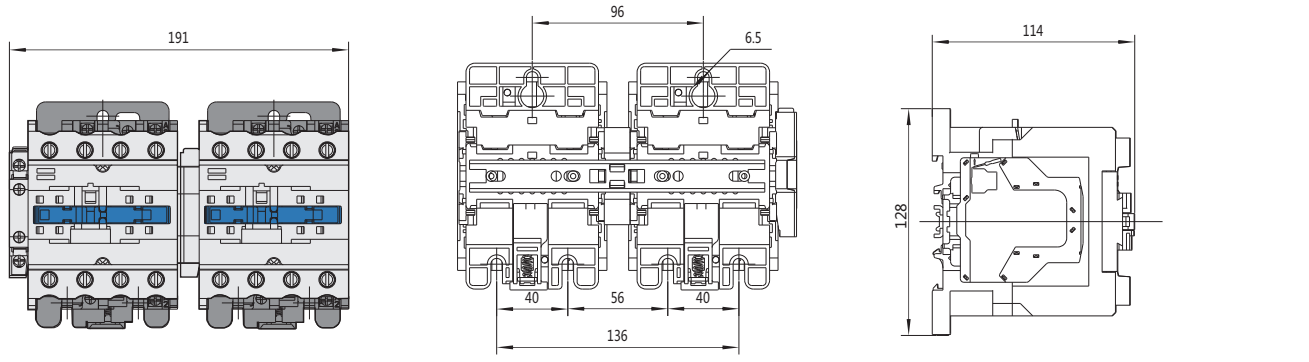

6. Ordering information

6.1 Completed name and model of contactor;
6.2 Rated operation voltage and frequency for AC coil;
6.3 Purchase quantity;
6.4 Mark clearly for ordering F4 contacts or din-rail extra.

«Электро-Профи» - www.ep.ru



NC2 AC Contactor, 115~800A

1. General

1.1 Certificates: NC2-115~800

CE, VDE, UKrSEPRO, EAC, RCC, UL;

1.2 Electric ratings: AC50/60Hz, up to 690V, up to 800A;

1.3 Application: remote making & breaking circuits;

protect circuit from overload when assembling

with thermal over-load relay;

1.4 Ambient temperature: -5℃~+40℃;

1.5 Altitude: ≤2000m;

1.6 Mounting category: III

1.7 Mounting conditions:inclination between the mounting plane and the vertical plane not exceed±5°

1.8 Standard: IEC/EN 60947-4-1

1.9 IP00(IP20 front face with shrouds SHD)

2. Type designation

N C 2- □□□ □/□

- Number of poles: 4P; Blank:3P
- Derivation code:
  N: Reversing/chang-over type contactor
  (Ns: horizontal mounting;
  Nc: vertical mounting)
  Z: DC control
- Rated operational current (A), AC-3 380/400V
- Design sequence No.
- Contactor
- Company code

3. Technical data

3.1 Clearance between active and static contacts

Models	Distance between contacts
NC2-115N/150N	≥5mm
NC2-185N/225N	≥5mm
NC2-265N/330N	≥6mm
NC2-400N/500N	≥6.5mm
NC2-630N	≥7mm
NC2-800N	≥7mm

3.2 Mechanical life

a. NJLC-FF and NJLS-FF: 3×10^6 operations

b. Other model: 2×10^6 operations

(a) 3×10^6	NJLc-FF, NJLs-FF
(b) 2×10^6	NJLs-FF, NJLs-GG, NJLs-HH, NJLs-KK, NJLs-LL, NJLc-FF, NJLc-FG, NJLc-FH, NJLc-FK, NJLc-FL, NJLc-GG, NJLc-GH, NJLc-GK, NJLc-GL, NJLc-HH, NJLc-HK, NJLc-HL, NJLc-KK, NJLc-KL, NJLc-LL

3.3 Terminal connection

Model	The connection capability			Screw size	Tightening torque (N·m)
	Number of piece	Cable Cross section (mm^2)	Cu busbar Cross section (mm^2)		
NC2-115	1	70~95	-	M6	3
NC2-150	1	70~95	-	M8	6
NC2-185	1	95~150	-	M8	6
NC2-225	1	95~150	-	M10	10
NC2-265	1	120~185	-	M10	10
NC2-330	1	185~240	-	M10	10
NC2-400	1(2)	240(150)	30×5	M10	10
NC2-500	2	150~185	40×5	M10	10
NC2-630	2	185~240	50×5	M12	14
NC2-800	2	185~240	50×5	M12	14

«Электро-Профи» - www.ep.ru

4. Technical data

★ 3P contactors AC coil operation

Model			NC2-115(Z)	NC2-150(Z)	NC2-185(Z)	NC2-225(Z)
Frame			Frame 1		Frame 2	
Rated Conventional heating current (A) AC-1			200	200	275	275
Rated operational current (A)	AC-3	380/400V AC	115	150	185	225
	AC-4	660/690V AC	86	108	118	137
Power of controlled 3-phase cage motor (AC-3)	kW	380/400V AC	55	75	90	110
		660/690V AC	80	100	110	129
	hp	240V AC	40	50	60	75
		415V AC	60	75	100	125
		480V AC	75	100	100	125
		600V AC	75	100	100	125
Operating cycles (operations /h) AC-3			1,200	1,200	600	600
Electrical life ($\times 10^6$ operations) AC-3			1.2	1.2	1	1
Mechanical life ($\times 10^6$ operations)			10	10	6	6
Matched fuse	Model		RT36-1	RT36-1	RT36-2	RT36-2
type	Rated current A		250	250	315	315

★ 4P contactors AC coil operation

Model			NC2-115/4	NC2-150/4	NC2-185/4	NC2-225/4
Frame			Frame 1		Frame 2	
Conventional heating current (A) AC-1			200	200	275	275
Rated operational current (A)	AC-3 AC-4	380/400V AC	115	150	185	225
		660/690V AC	86	108	118	137
Power of controlled 3-phase cage motor (AC-3)	kW	380/400V AC	55	75	90	110
		660/690V AC	80	100	110	129
	hp	240V AC	40	50	60	75
		415V AC	60	75	100	125
		480V AC	75	100	100	125
		600V AC	75	100	100	125
Operating cycles (operations /h) AC-3			1,200	1,200	600	600
Electrical life ($\times 10^6$ operations) AC-3			1.2	1.2	1	1
Mechanical life ($\times 10^6$ operations)			10	10	6	6
Matched fuse	Model		RT36-1	RT36-1	RT36-2	RT36-2
type	Rated current (A)		250	250	315	315

«Электро-Профи» - www.ep.ru

NC2-265(Z)	NC2-330(Z)	NC2-400(Z)	NC2-500	NC2-630	NC2-800	
Frame 3	Frame 4	Frame 5	Frame 6		Frame 7	
315	380	450	630	800	800	
265	330	400	500	630	AC-3	AC-4
170	235	303	353	462	800	630
					486	462
132	160	200	250	335	450	
160	220	280	335	450	475	
100	125	150	200	250	350	
150	150	200	250	350	600	
150	200	250	350	400	600	
150	200	300	350	500	650	
600	600	600	600	600	600	
0.8	0.8	0.8	0.8	0.8	0.6	
6	6	6	6	6	3	
RT36-3	RT36-3	RT36-3	RT36-4	RT36-4	RT36-4	
355	500	630	800	1000	1000	

NC2-265/4	NC2-330/4	NC2-400/4	NC2-630/4
Frame 3	Frame 4	Frame 5	Frame 6
315	380	450	800
265	330	400	630
170	235	303	462
132	160	200	335
160	220	280	450
100	125	150	250
150	150	200	350
150	200	250	400
150	200	300	500
600	600	600	600
0.8	0.8	0.8	0.8
6	6	6	6
RT36-3	RT36-3	RT16-3	RT36-4
355	500	630	1000

«Электро-Профи» - www.ep.ru

5. Accessories

Items	Model		NC2-115(Z)	NC2-150(Z)	NC2-185(Z)	NC2-225(Z)
AC coil	Coil power	AC: In-rush (VA)	660		966	
		AC: Sealed (VA)	60		75	
		DC: In-rush (W)	1500		1800	
		DC: Sealed (W)	5		6	
	Operation range	Operation voltage	(85%~110%) Us			
		Drop-out voltage	Common products; 20%~75%; electricity-saving products: 10%~75%Us			
	Coil code (XXX=coil voltage)	3P	FF XXX (DC)		FG XXX (DC)	
		4P	FF XXX/4		FG XXX/4	
Coil voltage			AC(50Hz,60Hz,50/60Hz):110,127,220,230,380,400 DC:48,110,220			
F4 auxiliary contact			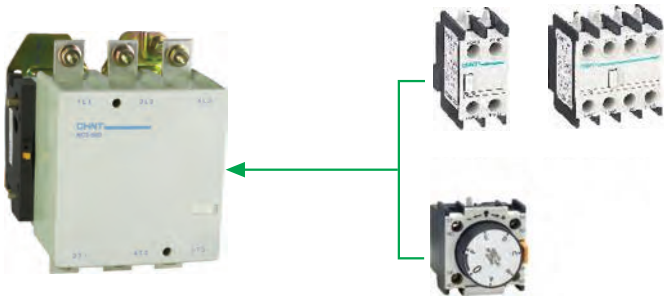			
F5 auxiliary contact			F4 - □ □ Number of N/C auxiliary contacts Number of N/O auxiliary contacts Auxiliary contact assembly		F5 - □ □ 0: time-delay range, 0.1s~3s 2: time-delay range, 0.1s~30s 4: time-delay range, 10s~180s T: making time-delay; D: breaking time-delay Time-delay module	

Items			NC2-115~150	NC2-185~225	NC2-265
Mute coil	Coil power	In-rush(VA)	1500	1800	1500
		Sealed(VA)	5	6	10
	Operation range	Operatio voltage	(85%-110%)Us		
		Drop-out voltage	(10%-75%)Us		
	Coil code(XXX=coil voltage)	3P/4P	FF XXX JZ	FG XXX JZ	FH XXX JZ
	Coil voltage(AC)		110V,220V(230V)		

«Электро-Профи» - www.ep.ru

NC2-265(Z)	NC2-330(Z)	NC2-400(Z)	NC2-500	NC2-630	NC2-800
840	1,500	1,500	1,500	1,700	1,700
100	10	20	25	25	34.2
1500	1500	1700			
8	8	10			
(85%~110%) Us					
Common products; 20%~75%; electricity-saving products: 10%~75%Us					
FH XXX (DC)	FI XXX (DC)	FJ XXX (DC)	FK XXX	FL XXX	FM XXX
FH XXX/4	FI XXX	FJ XXX	-	FL XXX/4	-

AC: 110,127,220,230,380,400
DC: 110,220(NC2-265Z/330Z/400Z)

Picture	Model	Configuration of contacts	
		Number of NO contact	Number of NC contact
	F4-20	2	0
	F4-11	1	1
	F4-02	0	2
	F4-40	4	0
	F4-31	3	1
	F4-22	2	2
	F4-13	1	3
	F4-04	0	4
Picture	**Model**	**Time-delay range**	**Configuration of time-delay contacts**
	F5-T0	0.1s~3s	N/O+N/C
	F5-T2	0.1s~30s	N/O+N/C
	F5-T4	10s~180s	N/O+N/C
	F5-D0	0.1s~3s	N/O+N/C
	F5-D2	0.1s~30s	N/O+N/C
	F5-D4	10s~180s	N/O+N/C

Model of mechanical interlock		Applicable assembly with contactors			
NJLs-FF		NC2-115+NC2-115;	NC2-150+NC2-150;	NC2-115+NC2-150	
NJLs-GG		NC2-185+NC2-185;	NC2-225+NC2-225;	NC2-185+NC2-225	
NJLs-HH	(Horizontal)	NC2-265+NC2-265;	NC2-330+NC2-330;	NC2-265+NC2-330	
NJLs-KK		NC2-400+NC2-400;	NC2-500+NC2-500;	NC2-400+NC2-500	
NJLs-LL		NC2-630+NC2-630;	NC2-800+NC2-800		
NJLc-FF		NC2-115+NC2-115;	NC2-150+NC2-150;	NC2-115+NC2-150	
NJLc-FG		NC2-115+NC2-185;	NC2-150+NC2-185;	NC2-115+NC2-225;	NC2-150+NC2-225
NJLc-FH		NC2-115+NC2-265;	NC2-115+NC2-330;	NC2-150+NC2-265;	NC2-150+NC2-330
NJLc-FK		NC2-115+NC2-400;	NC2-115+NC2-500;	NC2-150+NC2-400;	NC2-150+NC2-500
NJLc-FL		NC2-115+NC2-800;	NC2-115+NC2-630;	NC2-150+NC2-630;	NC2-150+NC2-800
NJLc-GG		NC2-185+NC2-185;	NC2-225+NC2-225;	NC2-185+NC2-225	
NJLc-GH		NC2-185+NC2-265;	NC2-185+NC2-330;	NC2-225+NC2-265;	NC2-225+NC2-330
NJLc-GK	(Vertical)	NC2-185+NC2-400;	NC2-225+NC2-500;	NC2-225+NC2-400;	NC2-225+NC2-500
NJLc-GL		NC2-185+NC2-800;	NC2-185+NC2-630;	NC2-225+NC2-630;	NC2-225+NC2-800
NJLc-HH		NC2-265+NC2-265;	NC2-330+NC2-330;	NC2-265+NC2-330	
NJLc-HK		NC2-265+NC2-400;	NC2-330+NC2-400;	NC2-265+NC2-500;	NC2-330+NC2-500
NJLc-HL		NC2-265+NC2-265;	NC2-265+NC2-630;	NC2-330+NC2-630;	NC2-330+NC2-800
NJLc-KK		NC2-400+NC2-400;	NC2-500+NC2-500;	NC2-400+NC2-500;	NC2-400+NC2-800
NJLc-KL		NC2-400+NC2-630;	NC2-500+NC2-630;	NC2-500+NC2-800	
NJLc-LL		NC2-630+NC2-630;	NC2-630+NC2-800		
NJLc-MM		NC2-800+NC2-800			

«Электро-Профи» - www.ep.ru

6. Structure features

6.1 The contactor is composed of arc-extinguishing system, contact system, base frame and magnetic system (including iron core, coil)
The contact system of the contactor is of direct action type and double-breaking points allocation.
The lower base-frame of the contactor is made of shaped aluminum alloy and the coil is of plastic enclosed structure.
The coil is assembled with the amarture to be an integrated one. They can be directly taken out from or inserted into the contactor.
It is convenient for user's service and maintenance.

Scheme of NC2-115~265 structure



1: arc-extinguishing system 2: contact system 3: base frame 4: magnetic system

NC2 series contactor is of short arcing distance. For example,
the arcing distance of NC2-115~330 contactor is only 10mm (200~500V), which is about one sixth that of the previous contactor of the same capacity. It is an excellent complementary element used for an electric control device and it occupies smaller space in a complete set of equipment. The mechanical interlock can be added to the contactor in both horizontal direction and vertical direction. Three sets of contactor can be interlocked in the vertical direction.

6.2 Refer to fig below for connection mode of connection plate, the interlocked contactors could be mounted horizontally or vertically. For vertical mounting, contactors with lower current mounted at the upper position.

6.3 For reversing type contactors assembled with NC2-115~225 and NC2-265~630, which will be mounted vertically, a padding plate should be added at the bottom of NC2-115~225.

Connection of connection plate

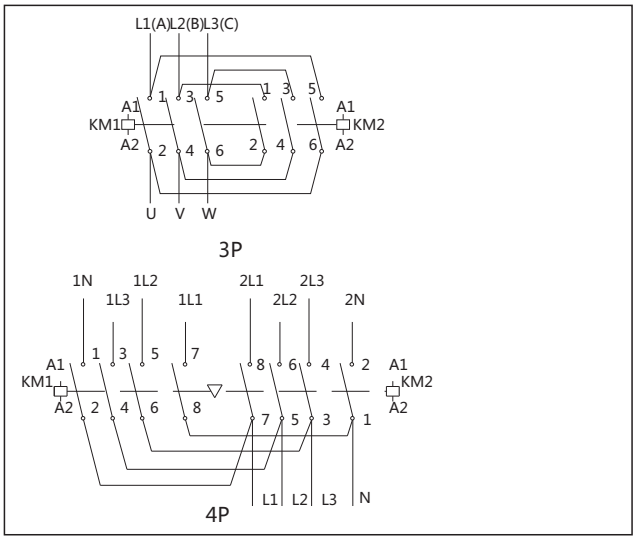

Rereising contactor mounted vertically

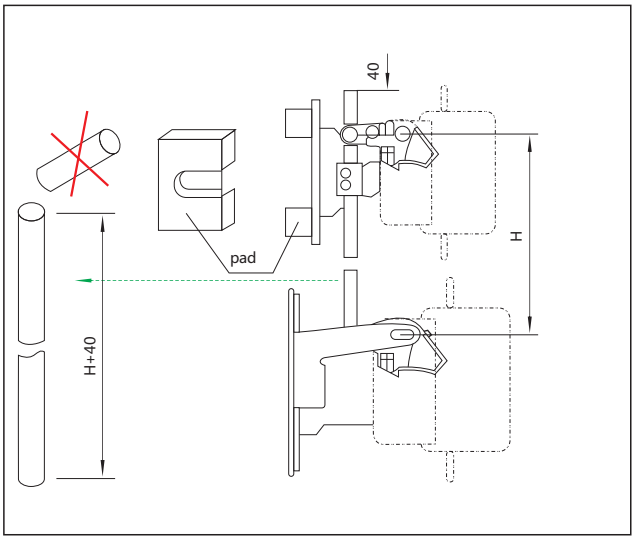

«Электро-Профи» - www.ep.ru

7. Overall and mounting dimensions (mm)

NC2-115~330

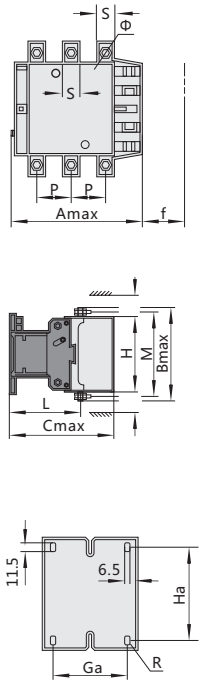

NC2-400~500

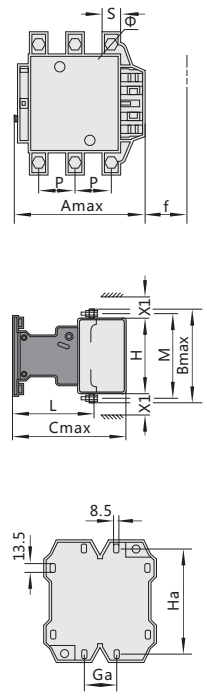

NC2-630~800

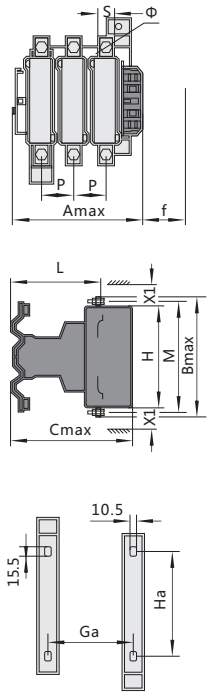

D

Model	NC2-115		NC2-150		NC2-185		NC2-225	
	3P	4P	3P	4P	3P	4P	3P	4P
A	168	204	168	204	171	211	171	211
B	163	163	171	171	175	175	198	198
C	172	172	172	172	183	183	183	183
P	37	37	40	40	40	40	48	48
S	20	20	20	20	20	20	25	25
Φ	M6	M6	M8	M8	M8	M8	M10	M10
f	131	131	131	131	131	131	131	131
M	147	147	150	150	154	154	172	172
H	124	124	124	124	127	127	127	127
L	107	107	107	107	113.5	113.5	113.5	113.5
X1 200~500V	10		10		10		10	
X1 660~1000V	15		15		15		15	
Ga	80		80		80		80	
Ha	110~120		110~120		110~120		110~120	

Note: a. f is the min distance needed to mount and dismount the coil.
b. X1: arcing distance is identified by operating voltage and breaking capacity.

«Электро-Профи» - www.ep.ru

NC2-265		NC2-330		NC2-400		NC2-500	NC2-630		NC2-800
3P	4P	3P	4P	3P	4P	3P	3P	4P	3P
202	247	215	261	215	261	235	312	389	312
204	204	208	208	208	208	238	305	305	305
215	215	220	220	220	220	233	256	256	256
48	48	48	48	48	48	55	80	80	80
25	25	25	25	25	25	30	40	40	40
M10	M10	M10	M10	M10	M10	M10	M12	M12	M12
147	147	147	147	147	147	150	181	181	181
178	178	181	181	181	181	208	264	264	264
147	147	158	158	158	158	172	202	202	202
141	141	145	145	145	145	146	155	155	155
10		10		15		15	20		20
15		15		20		20	30		30
96		96		80		80	180	240	180
110~120		110~120		170~180		170~180	180~190		180~190

D

«Электро-Профи» - www.ep.ru

NC2-115Ns~630Ns (Horizontal mounting)

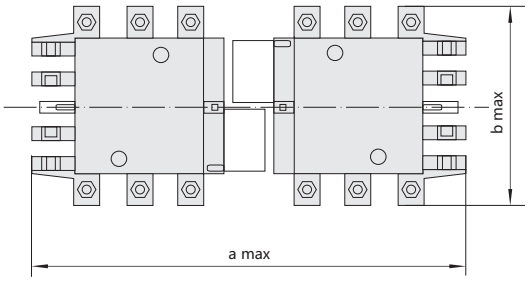

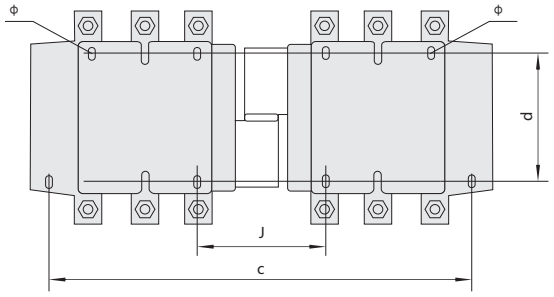

mm

Modle	pole	A max	b max	c	d	J
NC2-115Ns	3	350	163	330	110~120	71
	4	425	208	370		108
NC2-150Ns	3	350	171	330		71
	4	425	211	370		111
NC2-185Ns	3	350	174	330		78
	4	430	223	370		118
NC2-225Ns	3	350	197	330		78
	4	430	243	370		118
NC2-265Ns	3	450	203	428		109
	4	546	249	485		157
NC2-330Ns	3	450	206	428		124
	4	546	251	485		172
NC2-400Ns	3	485	206	460	170~180	157
	4	595	251	485		157
NC2-500Ns	3	485	238	460		156
NC2-630Ns	3	650	304	625	180~190	139
	4	810	364	785		139
NC2-800Ns	3	650	304	625		139

«Электро-Профи» - www.ep.ru

NC2-115Nc~630Nc (Vertical mounting)

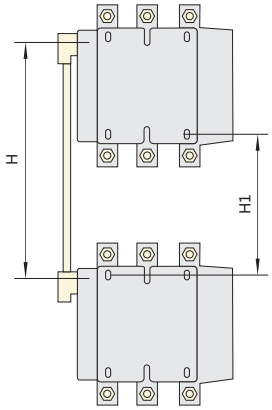

a. NC2-115Nc~225Nc

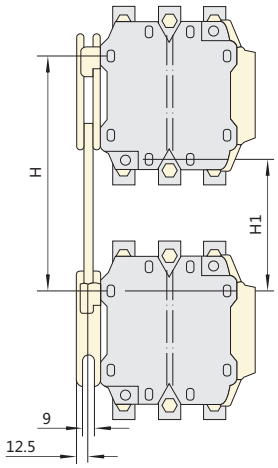

b. NC2-265Nc~800Nc

D

Model	H		H1	
	Min	Max	Min	Max
NC2-115Nc、NC2-150Nc	200	310	80	190
NC2-185Nc、NC2-225Nc	220	310	100	190
NC2-265Nc	250	380	130	260
NC2-330Nc	260	380	60	200
NC2-400Nc	280	380	100	200
NC2-500Nc	300	380	120	200
NC2-630Nc	380	380	200	200
NC2-800Nc	380	380	200	200

8. Assembly with overload relay

8.1 Assembly with thermal overload relay

Model of contactor	Assembled thermal ocerload relay			
	Model	Rated current (A)	Recommended fuse type	
			aM	gG
NC2-115 NC2-150 NC2-185 NC2-225	 NR2-200	80~125	125	200
		100~160	160	250
		125~200	200	315
NC2-185 NC2-225 NC2-265 NC2-330 NC2-400 NC2-500 NC2-630~800	 NR2-630	160~250	250	400
		200~315	315	500
		250~400	400	630
		315~500	500	800
		400~630	630	800

«Электро-Профи» - www.ep.ru



NCK3
Definite Purpose Contactor, 20~90A

1. General

1.1 Certificates: UL，CE、CSA

1.2 Application: HVACR;

1.3 Utilization category: AC-1, AC-8a;

1.4 Rated insulation voltage: 630V;

1.5 Standard: UL/CSA 60947-4-1

1.6 Normal operating conditions:

Ambient air temperature: -5℃~+40℃

Pollution degree: 2.

Altitude: ≤2000m

Mounting angle: The inclination between the mounting surface and vertical plane cannot exceed ±5°.

1.7 IP00

2. Type designation

N C K 3 - □/□□□

- Number of N/C auxiliary contacts
- Number of N/O auxiliary contacts
- Number of main contacts, blank: 3P
- Full Load Amps (AC-8a)
- Design sequence No.
- For HVACR application
- Contactor
- Company code

«Электро-Профи» - www.ep.ru

3. Technical data

3.1 Contactor

★ NCK3, 1P+shunt

Model	NCK3-20/1-40/1								
	FLA			RES	LRA			Voltage	Single-phase horsepower
	240/277V	480V	600V		240/277V	480V	600V		
NCK3-20/1	25	25	25	35	150	125	100	120	1
								240	2
NCK3-25/1	25	25	25	35	150	125	100	120	1
								240	2
NCK3-30/1	32	32	32	40	200	150	120	120	1
								240	2
NCK3-32/1	32	32	32	40	200	150	120	120	1
								240	2
NCK3-40/1	40	40	40	50	240	200	160	120	2
								240	3

★ NCK3, 1pole+1NC auxiliary contact

Model	NCK3-20/101-40/101								
	FLA			RES	LRA			Voltage	Single-phase horsepower
	240/277V	480V	600V		240/277V	480V	600V		
NCK3-20/101	25	25	25	35	150	125	100	120	1
								240	2
NCK3-25/101	25	25	25	35	150	125	100	120	1
								240	2
NCK3-30/101	32	32	32	40	200	150	120	120	1
								240	2
NCK3-32/101	32	32	32	40	200	150	120	120	1
								240	2
NCK3-40/101	40	40	40	50	240	200	160	120	2
								240	3

3.2 Contactor

★ NCK3, 2Pole

Model	NCK3-20/2-40/2								
	FLA			RES	LRA			Voltage	Single-phase horsepower
	240/277V	480V	600V		240/277V	480V	600V		
NCK3-20/2	25	25	25	35	150	125	100	120	2
								240	3
NCK3-25/2	25	25	25	35	150	125	100	120	2
								240	3
NCK3-30/2	32	32	32	40	200	150	120	120	2
								240	3
NCK3-32/2	32	32	32	40	200	150	120	120	2
								240	3
NCK3-40/2	40	40	40	50	240	200	160	120	2
								240	3

«Электро-Профи» - www.ep.ru

★ NCK3, 3Pole

Model	NCK3-20-40									
	FLA			RES	LRA			Voltage	Single-phase horsepower	Three-phase horsepower
	240/277V	480V	600V		240/277V	480V	600V			
NCK3-20	25	25	25	35	150	125	100	120	2	/
								240/277	5	10
								480	/	15
								600	/	20
NCK3-25	25	25	25	35	150	125	100	120	2	/
								240/277	5	10
								480	/	15
								600	/	20
NCK3-30	32	32	32	40	200	150	120	120	2	/
								240/277	5	10
								480	/	15
								600	/	20
NCK3-32	32	32	32	40	200	150	120	120	2	/
								240/277	5	10
								480	/	15
								600	/	20
NCK3-40	40	40	40	50	240	200	160	120	3	/
								240/277	7.5	10
								480	/	20
								600	/	25

Model	NCK3-50-60									
	FLA			RES	LRA			Voltage	Single-phase horsepower HP	Three-phase horsepower HP
	240/277V	480V	600V		240/277V	480V	600V			
NCK3-50	50	50	50	65	300	250	200	110/120	3	/
								200/208	7.5	15
								240/277	10	15
								480	/	25
								600	/	25
NCK3-60	60	60	60	75	360	300	240	110/120	5	/
								200/208	7.5	25
								240/277	10	25
								480	/	30
								600	/	30

Model	NCK3-75-90									
	FLA			RES	LRA			Voltage	Single-phase horsepower HP	Three-phase horsepower HP
	240/277V	480V	600V		240/277V	480V	600V			
NCK3-75	75	75	75	90	450	375	300	110/120	5	/
								200/208	10	20
								240/277	15	25
								480	/	50
								600	/	50
NCK3-90	90	90	90	120	540	450	360	110/120	7.5	/
								200/208	15	25
								240/277	20 (88A FLA)	30
								480	/	60
								600	/	60 (62A FLA)

«Электро-Профи» - www.ep.ru

3.3 Coil specifications

★ 1Pole+shunt, 1Pole+1 NC, auxiliary contact, 2Pole

Model		NCK3-25(20)	NCK3-30(32)	NCK3-40
Power consumption	In-rush (VA)	55	55	55
	Sealed (VA)	13	13	13
Operation range	Operation voltage	(85%~110%) Us		
	Drop-out voltage	(20%~65%) Us		
Power supply voltage Us		AC50/60Hz, 24V, 110V,120V, 220V,240V		

★ 3Pole

Model		NCK3-20~40	NCK3-50~60	NCK3-75~90
Power consumption	In-rush (VA)	51	83	165
	Sealed (VA)	12	14	30
Operation range	Operation voltage	(85%~110%) Us		
	Drop-out voltage	(20%~65%) Us		
Power supply voltage Us		AC50/60Hz, 24V, 110V,120V, 220V,240V		

3.4 Specifications of auxiliary contact

★ 1Pole+1 NC auxiliary contact

Ith (A)	Ui (V)	Capacity of auxiliary contact	
		AC (VA)	DC (W)
10	600	300	30

★ 3Poe , lateral auxiliary contact (NCF8-11 1NC+1NO)

Utilization category	Rated insulation voltage (V)	Resistive amps (A)	Rated operational voltage (V)	Rated operational current (A)	Control capacity
AC-15	660V	10	380/400	0.95	360VA
DC-13	660V	10	220/230	0.15	33W

4. Terminal connection

Model	Cabling(mm^2) (Cu)		Tightening torque (N·m)				
	Rigid wire with single core	Flexible stranded wire	Coil		Main circuit		
			⊕	torque(N.m)	⏽	⊕	torque(N.m)
NCK3-20	2.5~6	2.5~4	-	-	M8	M5	2.3
NCK3-25	2.5~6	2.5~4	-	-	M8	M5	2.3
NCK3-32	4~10	2.5~6	-	-	M8	M5	2.3
NCK3-40	4~10	2.5~6	-	-	M8	M5	2.3
NCK3-50	6~16	4~10	M3.5	0.8	M10	-	4.5
NCK3-60	6~16	4~10	M3.5	0.8	M10	-	4.5
NCK3-75	16~35	10~25	M4	1.2	M12	-	5.6
NCK3-90	25~35	16~25	M4	1.2	M12	-	5.6

«Электро-Профи» - www.ep.ru

5. Overall and mounting dimensions (mm)

NCK3-20/1~40/1

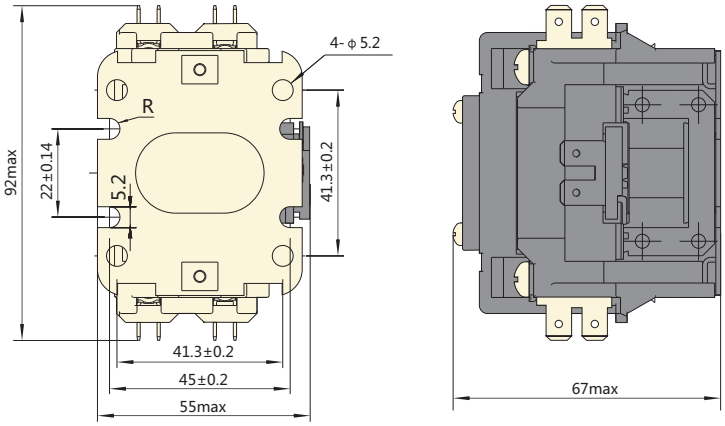

NCK3-20/2~40/2

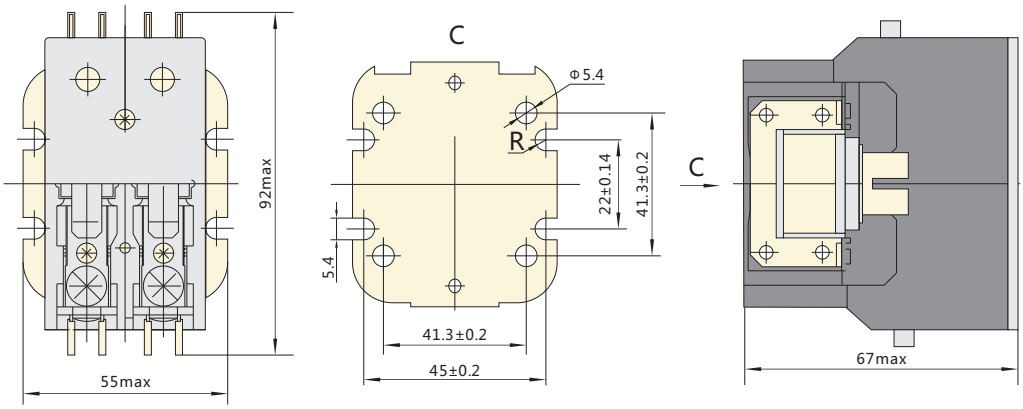

NCK3-20~40

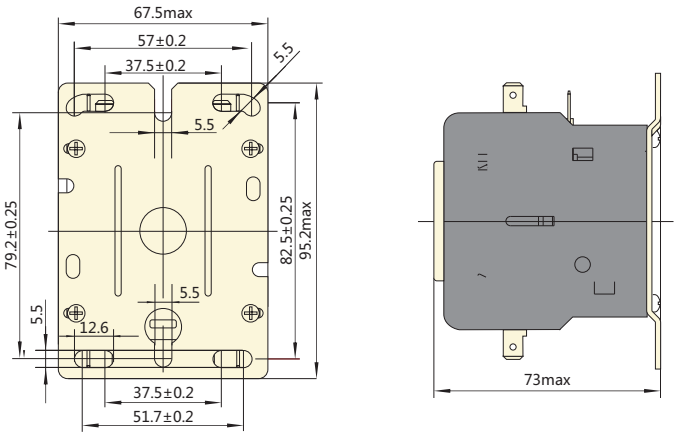

«Электро-Профи» - www.ep.ru

NCK3-50~60

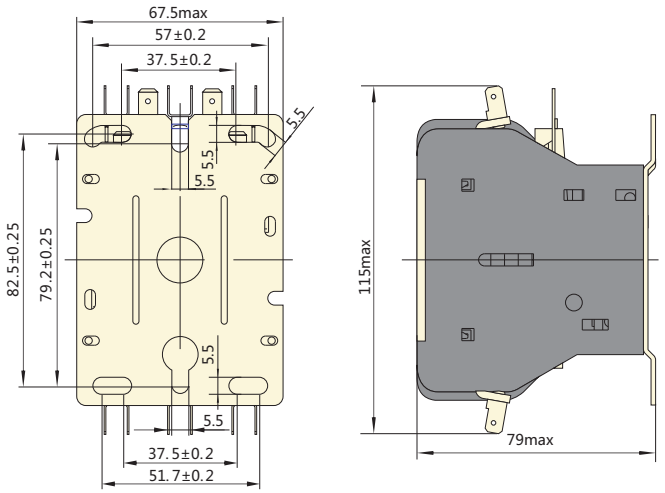

NCK3-75~90

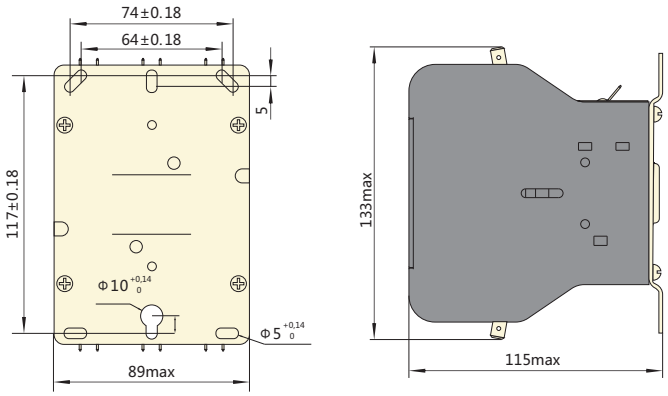

D



NCK5 Definite Purpose Contactor 20～40A

1. Overview

1.1 Product certification: UL, CSA

1.2 Application: HVACR

1.3 Usage category: AC-1, AC-8a

1.4 Rated insulation voltage Ui: 630V

1.5 Applicable standard: UL/CSA 60947-4-1

1.6 Normal operating conditions:

Ambient air temperature: -5℃～+40℃

Pollution degree: 2.

Altitude: ≤2000m

Mounting angle: The inclination between the mounting surface and vertical plane cannot exceed ±5°.

1.7 IP00

2.Description of product model

N C K 5 - □/□ □ □

- Main load terminal Denoted by L and S, L indicates the box lug, S indicates the screw
- Denoted by letter T, T indicates two quick- plug terminals and F indicates four quick-plug terminals, omitted when the single housing has only one terminal (e.g. 3P, 4P).
- 1N represents 1 pole ,2N represents 2 poles, 3 represents 3 poles,4 represents 4 poles,
- Rated current (AC-8a)
- Design serial number For HVACR application
- AC-specific
- AC contactor
- Enterprise feature code

3. Product features

3.1 The coil is closed.

3.2 The range of coil voltage is complete, including 24V-480V. A wide range covering 208V-240V is available for user selection.

3.3 3 Poles、4 poles: The coil connection can be up or down, with 2 quick-plug connections, 1 quick-plug + screwed connection for user selection.

3.4 3 Poles、4 pole: The main circuit has diverse wiring modes: combined screw, box lug and two quick-plug combinations.

3.5 1 pole、2 pole：The main circuit has diverse wiring modes combined screw，box lug and two quick-plug or four quick-plug combination.

«Электро-Профи» - www.ep.ru

4. Technical Parameters

4.1.1 Technical parameters of single two-pole main circuit

Model	Definite purpose Rating							HP ratings (single phase)	
	FLA			RES	LRA			120V	240V
	240/277V	480V	600V		240/277V	480V	600V		
NCK5-20/1N-25/1N NCK5-20/2N-25/2N	25	25	25	35	150	125	100	1	2
								2	3
NCK5-30/1N-32/1N NCK5-30/2N-32/2N	32	32	32	40	200	150	120	1	2
								2	3
NCK5-40/1N NCK5-40/2N	40	40	40	50	240	200	160	2	3

4.1.2 Technical parameters of 3 poles、4 poles main circuit

Model	Definite purpose rating (Three phase)							HP ratings		
	FLA			RES	LRA			Voltage	Single phase	Three phase
	240/277V	480V	600V		240/277V	480V	600V			
NCK5-20/3 NCK5-20/4	25	25	25	35	150	125	100	120	2	/
								240/277	5	10
								480	/	15
								600	/	20
NCK5-25/3 NCK5-25/4	25	25	25	35	150	125	100	120	2	/
								240/277	5	10
								480	/	15
								600	/	20
NCK5-30/3 NCK5-30/4	32	32	32	40	200	150	120	120	2	/
								240/277	5	10
								480	/	15
								600	/	20
NCK5-32/3 NCK5-32/4	32	32	32	40	200	150	120	120	2	/
								240/277	5	10
								480	/	15
								600	/	20
NCK5-40/3 NCK5-40/4	40	40	40	50	240	200	160	120	3	/
								240/277	7.5	10
								480	/	20
								600	/	25

4.2 Technical Parameters of Coil

Type		NCK5-20/1N～40/1N	NCK5-20/2N～40/2N	NCK5-20/3～40/3 NCK5-20/4～40/4
Coil power consumption	IN-rush(VA)	45	55	62
	Sealed (VA)	10	13	9
Operating range	Pull-in voltage	(85%~110%)Us		
	Release voltage	(20~65%) Us		
Coil voltage	(1 poles、2 poles： AC 50 or 60Hz ; 3 poles、4 poles： AC50 / 60Hz) 24V, 36V, 48V, 110V, 120V, 220V, 208~240V, 277V, 440V, 480V			

4.3 Technical Parameters of 3 poles and 4poles Auxiliary Module (Side-mounted)

1NC+1NO auxiliary module (NCF8-11)

Usage category	Rated insulation voltage (V)	Agreed free air heating current (A)	Rated operating voltage (V)	Rated operating current	Control capacity
AC-15	690	10	380/400	0.95	360VA
DC-13	690	10	220/230	0.15	33W

«Электро-Профи» - www.ep.ru

5 Wiring

Model	Connecting wire (mm2)		Tightening torque (N.m)				
	Single core hard wire	Stranded flexible wire	Coil		Main circuit		
			⊕	torque(N.m)	⏀	⊕	torque(N.m)
NCK5-20/1N-25/1N NCK5-20/2N-25/2N	2.5~6	2.5~4	-	-	M8	M5	2.3
NCK5-30/1N-32/1N NCK5-30/2N-32/2N	4~10	2.5~6	-	-	M8	M5	2.3
NCK5-40/1N NCK5-40/2N	4~10	2.5~6	-	-	M8	M5	2.3
NCK5-20/3-25/3 NCK5-20/4-25/4	2.5~6	2.5~4	M4	1.2	M8	M5	2.3
NCK5-30/3-32/3 NCK5-30/4-32/4	4~10	2.5~6	M4	1.2	M8	M5	2.3
NCK5-40/3 NCK5-40/3	4~10	2.5~6	M4	1.2	M8	M5	2.3

6. Overall and installation dimensions

NCK5-20/3~40/3

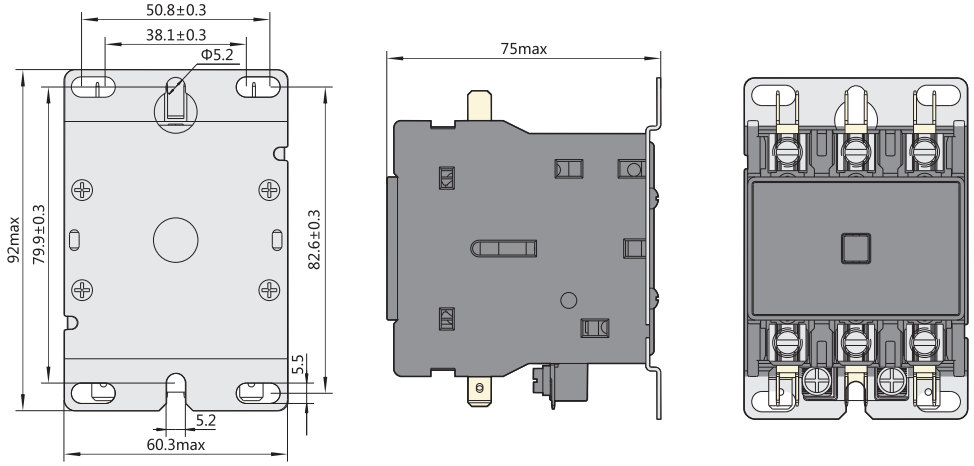

NCK5-20/4~40/4

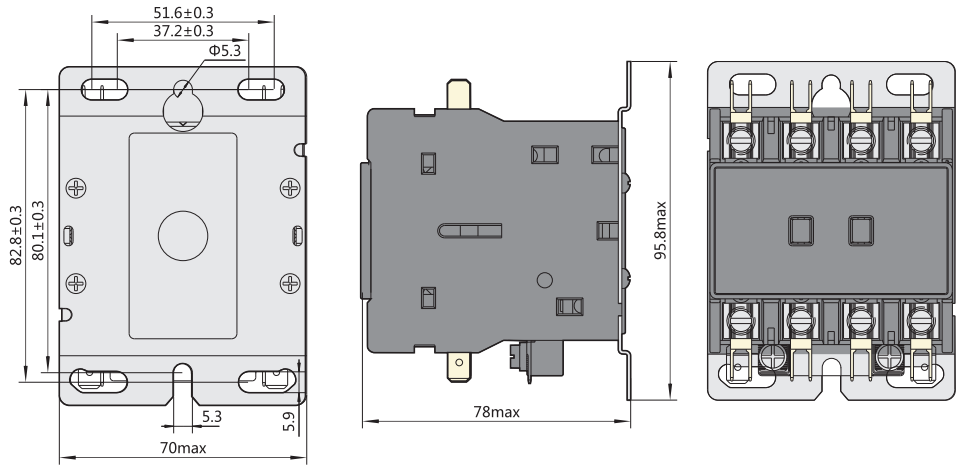

«Электро-Профи» - www.ep.ru

6.1 Overall and mounting dimensions of single two-pole product

NCK5-20/1N-40/1N

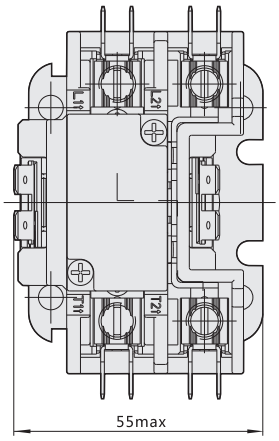

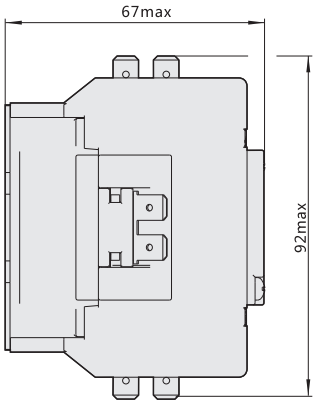

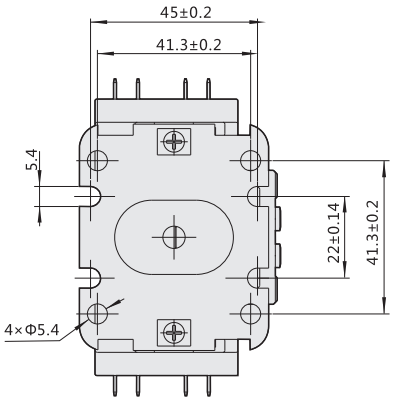

NCK5-20/2N-40/2N

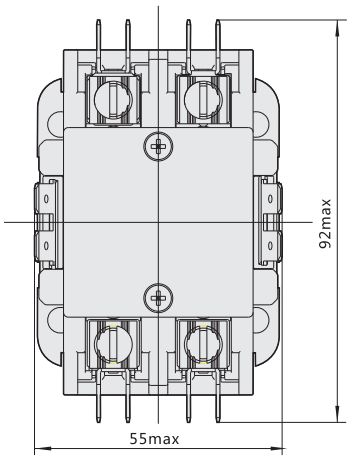

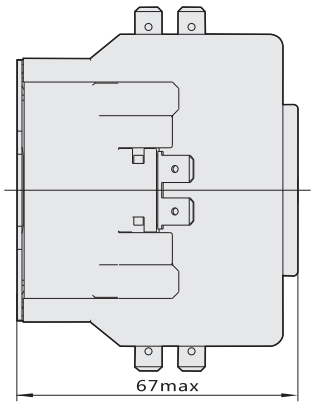

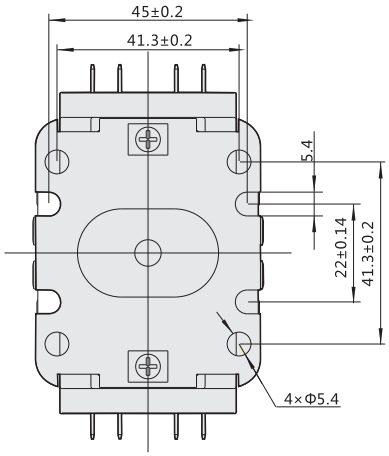

D

«Электро-Профи» - www.ep.ru



NC11 AC Contactor

1. Scope of application

NC11 contactor is mainly used in an electric meter box to control the power supply system of the electric meter: Under normal conditions, the main contacts of the contactor are closed. Only if the consumers fail to pay the electric fee, the power supply company can send a signal to the contactor to apply power to the coil of the contactor, thereby cutting off the power supply. Besides, it can also be used in the power distribution cabinet in refrigerated warehouses and laundries. NC11 contactor can be used in AC 50Hz or 60Hz circuit up to 400V/65A under AC-3 category for remote open and close. Applicable standards: IEC 60947-4-1. EN 947-4-1.

2. Model and meanings

N C 11- □□ / □ □

- Number of normally closed main contact
- Number of normally open main contact
- Basic specification code, expressed by 400V, AC-3 rated operational current
- Design serial number
- AC contactor
- Company code

3. Operating conditions

3.1 Ambient air temperature: -5°C~+ 55°C; the mean value does not exceed +35°C within 24 hours.

3.2 Altitude: not exceed 2000m.

3.3 Atmospheric conditions: The relative humidity shall not exceed 50% when the maximum temperature is +40°C; the relative humidity can be higher when the temperature is lower; for example, at +20°C, the relative humidity can be 90%. Special measures shall be taken if there is condensation caused accidently owing to temperature changes.

3.4 Pollution degree: 3.

3.5 Installation category: category Ⅲ.

3.6 Shock and vibration: the product shall be installed and used in the place without serious shaking, shock, and vibration.

3.7 Protection class: IP10

«Электро-Профи» - www.ep.ru

4. Main parameters and technical performance

Relevant technical parameters of the contactor are shown in table 1:

Table 1

Technical parameters			Product model and specification
			NC11-65/04
Rated insulation voltage Ui			690V
Rated impulse withstand voltage Uimp			8kV
Number of poles			4P
Surrounding ambient temperature		Storage	-50℃~+80℃
		Operation	-5℃~+55℃
		Permissible	-25℃~+55℃
Maximum sea level elevation			2000m
Installation way			A ±5° angle with the normal erection plan is permissible
Rated operational current		AC-3 , θ≤55℃	65A
(Ue≤440V)		AC-1 , θ≤55℃	80A
Rated operational voltage			400V
Conventional free air thermal current Ith,0≤55			80A
Controllable three phase squirrel-cage motor		230V	18.5
Motor power kW		400V	30
Mechanical endurance (10k times)			100
Electrical endurance (AC-3) (10k times)			60
Pull-in voltage in thermal state (+55℃)			(85%~110%)Us
Release voltage in cold state (-25℃)			(75%~20%)Us
Connecting wire	Flexible wire without terminal	1 piece; min/max mm2	6/25
		2 pieces; min/max mm2	4/10
	Flexible wire with terminal	1 piece; min/max mm2	6/25
		2 pieces; min/max mm2	4/10
	Hard wire without terminal	1 piece; min/max mm2	6/25
		2 piece s; min/max mm2	4/10
Tightening torque			4 N.m.
Model of the fuse used			RT16-80
Installation category			Category Ⅲ
Protection grade			IP10
Class of pollution			Class 3
Auxiliary contact			The body part has no auxiliary contact, but a NCF1-11C can be hung to each side respectively.
Work system applicable to the contactor			8-hour, no-break, intermittent periodic duty
Rated operational voltage of the coil			220V/230V. 380V/400V

5. Overall arrangement and key technologies

Contactors of this series are bridge type, double breaking points, directly operated AC contactor. The main contact is quadrupole normally closed; it is reaction force is from the bridge shaped contact.

«Электро-Профи» - www.ep.ru

6. Overall and installation dimension

Figure 1 overall dimension and installation dimension of nc11-65/04



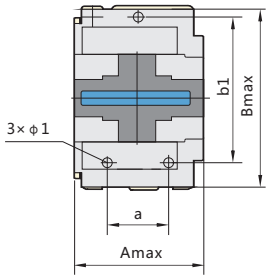

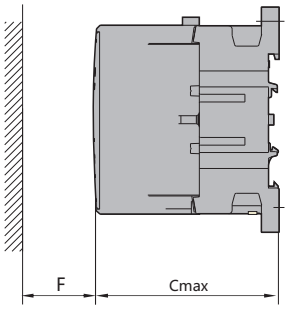

Table 1 mm

Basic specification	Amax	Bmax	Cmax	a	b1	B2	Φ1	Φ2	F
65	77	129	105	40±0.50	105±0.7	—	$6.5^{+0.58}_{0}$	—	12

7. Ordering instructions

When an order is placed, please point out:
7.1 Complete name and model of the contactor;
7.2 Rated operational voltage and frequency or specification code of coil;
7.3 Amount on order.
Example of order: NC11-65/04AC contactor; coil voltage 220V 50Hz 10 sets.

«Электро-Профи» - www.ep.ru



NCH8 Modular AC Contactor 20~63A

1. General

1.1 Electric ratings: up to 20A, 25A, 40A, 63A, 230V, 400V AC50/60Hz;

1.2 Utilization category: AC-1, AC-7a, AC-7b;

1.3 Standard: IEC/EN 61095

2. Features

2.1 Compact design and modularization design;

2.2 Insulation material with excellent performances has been adopted to enhance the operation security to a great extent;

2.3 Elegant appearance. A mounting instruction diagram is appended for convenient operation;

2.4 No noise during operation.

2.5 IP20

D

«Электро-Профи» - www.ep.ru

3. Technical data

3.1 Ratings

Model	Utilization category	Ui (V)	Ue (V~)	Conventional heating current (A)	Ie (A)	Controlled power (kW)
NCH8-20	AC-1,AC-7a	500	230	20	20	4
NCH8-20	AC-7b	500	230	20	9	1.2
NCH8-25	AC-1,AC-7a	500	400	25	25	16
NCH8-40	AC-1,AC-7a	500	400	40	40	40
NCH8-63	AC-1,AC-7a	500	400	63	63	40

3.2 Making and breaking capacity

Model	Utilization category	Making and breaking conditions			Electrification time (s)	Interval time (s)	Operating cycle times
		Ic/Ie	Ur/Ue	COSΦ			
NCH8-20	AC-1,AC-7a	1.5	1.05	0.8	0.05	10	50
NCH8-20	AC-7b	8	1.05	0.45	0.05	10	50
NCH8-25	AC-1,AC-7a	1.5	1.05	0.8	0.05	10	50
NCH8-40	AC-1,AC-7a	1.5	1.05	0.8	0.05	10	50
NCH8-63	AC-1,AC-7a	1.5	1.05	0.8	0.05	10	50

3.3 Conventional Operating Performances

3.3.1 Conventional operating performances of NCH8-20~25

Utilization category	Making conditions			Breaking conditions			Electrification time (s)	Interval time (s)	Operating frequency
	I/Ie	U/Ue	COSΦ	Ic/Ie	Ur/Ue	COSΦ			
AC-1	1.0	1.05	0.8	1.0	1.05	0.8	0.05	10	6000
AC-7a	1.0	1.05	0.8	1.0	1.05	0.8	0.05	10	30000
AC-7b	6.0	1.0	0.45	1.0	0.17	0.45	0.05	10	30000

3.3.2 Conventional operating performances of NCH8-40~63

Utilization category	Making and breaking conditions			Electrification time (s)	Interval time (s)	Operating frequency
	Ic/Ie	Ur/Ue	COSΦ			
AC-1	1.0	1.05	0.8	0.05	10	6000
AC-7a	1.0	1.05	0.8	0.05	10	30000

3.4 Conventional heating current under different ambient temperature

Rated current	40℃	50℃	60℃	70℃
Ie=20A	20A	18A	16A	14A
Ie=25A	25A	22A	18A	16A
Ie=40A	40A	38A	36A	32A
Ie=63A	63A	57A	50A	46A

3.5 Number of appended lamps with voltage up to 230V

Unit power	Tungsten filament and halogen 230V					
	60W	100W	200W	300W	500W	1000W
20A	20	12	6	4	2	1
25A	36	20	11	7	4	2
40A	85	50	25	17	10	5
63A	115	70	35	23	14	7

«Электро-Профи» - www.ep.ru

4. Overall and mounting dimensions (mm)

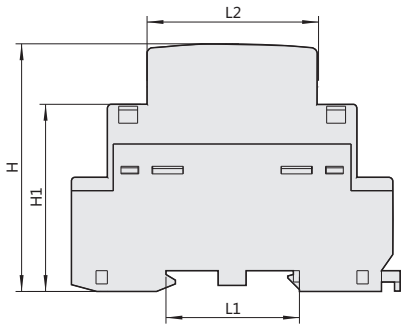

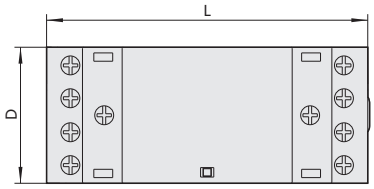

Model	D		L	L1	L2	H	H1
	2P	4P					
NCH8-20~25	18	36	85	35.5	45	65.5	50
NCH8-40~36	36	54	85	35.5	45	65.5	50

D

5. Ordering information

Model	Number of contact	Coil voltage
NCH8-20	2NO	24V,220/230V,240V 50/60Hz
NCH8-20	1NO+1NC	
NCH8-20	2NC	
NCH8-20	1NO	
NCH8-20	1NC	
NCH8-20	4NO	
NCH8-20	2NO+2NC	
NCH8-20	3NO+1NC	
NCH8-25	2NO	
NCH8-25	1NO+1NC	
NCH8-25	2NC	
NCH8-25	1NO	
NCH8-25	1NC	
NCH8-25	4NO	
NCH8-25	2NO+2NC	
NCH8-25	3NO+1NC	
NCH8-40	4NO	
NCH8-40	3NO+1NC	
NCH8-40	2NO+2NC	
NCH8-40	2NO	
NCH8-40	1NO+1NC	
NCH8-40	2NC	
NCH8-63	4NO	
NCH8-63	3NO+1NC	
NCH8-63	2NO+2NC	
NCH8-63	2NO	
NCH8-63	1NO+1NC	
NCH8-63	2NC	

«Электро-Профи» - www.ep.ru



CJ19 Contactor for Capacitor Switching

1. General

1.1 Electric ratings: AC50/60Hz, up to 690V;

1.2 Standard: IEC/EN 60947-4-1

2. Type designation

CJ 19 □ □

- Number of auxiliary contacts
  20: 2N/O, 11: 1N/O+1N/C
  02: 2N/C (CJ19-25~43)
  21: 2N/O+1N/C, 12: 1N/O+2N/C (CJ19-63~95)
  10: 1N/O, 01: 1N/C (CJ19-115~170)
- Basic model code
- Design sequence No.
- Contactor

3. Operating conditions

3.1 Ambient temperature: -5℃~+40℃,
the average during 24 hours should not exceed +35℃;

3.2 Altitude:≤ 2000m;

3.3 Atmosphere conditions: At mounting site,
relative humidity not exceed 50% at the max temperature of +40℃, higher relative humidity is allowable under lower temperature. For example,
RH could be 90% at +20℃,
special measures should be taken to occurrence of dews;

3.4 Pollution degree: 3

3.5 Installation category: Ⅲ

3.6 Installation conditions :
the inclination between installation plane and vertical plane is within ±5 °

3.7 Impact and shake: the products should locate in the places where there are no obvious impact and shake.

3.8 Protection class: IP10

4. Technical data

Item		CJ19-25	CJ19-32	CJ19-43	CJ19-63	CJ19-95	CJ19-115	CJ19-150	CJ19-170
Controllable capacitor Capacity	220/230V	6.7	10	15	20	35	40	46	52
	380/400V	12.5	20	25	33.3	50	60	80	90
	660/690V	18	26	36	48	92	100	120	130
Rated Isolation Voltage Ui V		690					690		
Rated Operational Voltage Ue V		220/230V, 380/400V,660/690V							
Conventional thermal current Ith A		25	32	43	63	95	200	200	275
Rated Operational current Ie A (380V)		17	23	29	43	72.2	87	115	130
Restrained surge capacity		20 Ie							
Controlled power voltage		110 127 220 380							
Auxiliary contact		AC-15: Ie:0.95A Ue:380/400V DC-13: Ie:0.15A Ue:220/250V Conventional thermal current Ith: 10A							
Operating Frequency cycles/h		120							
Electrical durability 10^4		10					2		
Mechanical durability 10^4		100					300		

«Электро-Профи» - www.ep.ru

5. Overall and mounting dimensions (mm)

CJ19-25~43

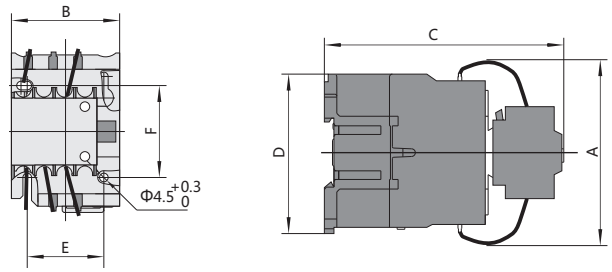

CJ19-63~95

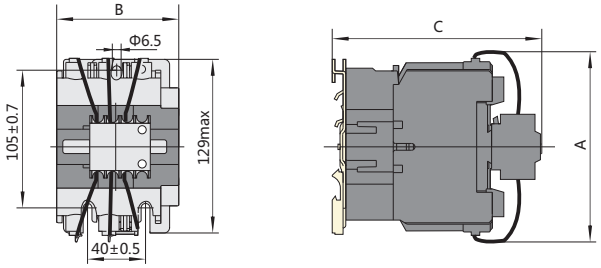

CJ19-115~170

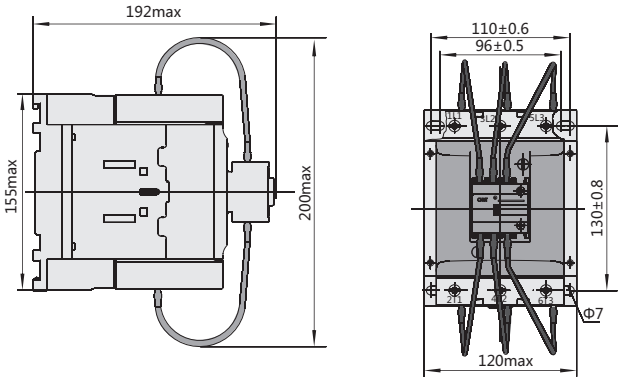

Model	Amax	Bmax	Cmax	Dmax	E	F	Note
CJ19-25	80	47	124	76	34/35	50/60	Not only fixed by screws but also could be fixed with 35mm din rail
CJ19-32	90	58	132	86	40	48	
CJ19-43	90	58	136	86	40	48	
CJ19-63	132	79	150	-	-	-	Not only fixed by screws but also could be fixed with 35mm and 75mm din rail
CJ19-95	135	87	158	-	-	-	
CJ19-115	200	120	192	155			Not only fixed by screws but also could be fixed with two 35mm din rail
CJ19-150	200	120	192	155			
CJ19-170	200	120	192	155			

6. Wiring and installation

6.1 The connection terminals are protected through insulation cover, which is reliable and secure for installation and operation;

6.2 For CJ19-25~43, screws are available for installation, as well as the DIN rail;
for CJ19-63~95, 35mm or 75mm standard rail are available for installation.
for CJ19-115~170, screws are available for installation, as well as two 35mm DIN rail.

«Электро-Профи» - www.ep.ru



NR8 Thermal Overload Relay

1. General

Nr8 series thermal overload relay (hereinafter referred to as thermal relay) is used to provide overload and phase failure protection for AC motors with a frequency of AC 50Hz/60Hz, a voltage of up to 690V and a current of 0.1A~38A that operate continuously or intermittently.

The thermal relay also has temperature compensation, operation indication, automatic and manual reset and stop functions and stable and reliable performances.

Standard: IEC 60947-4-1.

Plug-in mounting is used between the thernal relay and the contactor.

2. Operating conditions

2.1 Altitude: not higher than 2000m.

2.2 When the ambient tempeature is -5℃~+40℃, the mean value is no greater than +35℃ within 24 hours.

2.3 Atmospheric conditions: When the ambient air temperature is +40℃, the relative humidity of the air shall not be higher than 50%; a higher relative humidity is allowed at a lower temperature; for example, for the wettest month, the lowest temperature averaged shall not be higher than +25℃, the maximum relative humidity averaged shall be 90%, and special measures shall be taken for the condensation occasionally produced due to temperature change.

2.4 Class of pollution: 3.

2.5 The inclination between the mounting plane and the vertical plane shall not exceed 5°.

2.6 In non-explosive media that do not contain a sufficient amount of gas or conductive dust to cause metal corrosion or insulation failure.

2.7 In places with rain and snow protection equipment and not full of vapor.

2.8 In places where there is no significant shake, impact or vibration.

«Электро-Профи» - www.ep.ru

3. Technical data

Item			NR8-11.5	NR8-38
Current class			13	38
Nominal insulation voltage V			690	690
Phase failure protection			Have	Have
Manual and automatic reset			Have	Have
Temperature compensation			Have	Have
Tripping indication			Have	Have
Test button			Have	Have
Stop button			Have	Have
Mounting type			Plug-in type	Plug-in type
Auxiliary contact			1NO+1NC	1NO+1NC
AC-15 230V rated current A			2.61	/
AC-15 380V/400V rated current A			1.5	1.5
DC-13 220V rated current A			0.2	0.2
Conductor cross-sectional area mm^2	Main circuit	Single-core or stranded conductor	1~2.5	1~10
		Terminal screw	M4	M4
	Auxiliary circuit	Single-core or stranded conductor	0.5~2.5	0.5~2.5
		Terminal screw	M3.5	M3.5

D

4. Others

4.1 Structural features
4.1.1 Three-phase bimetal type, tripping class 10A.
4.1.2 Phase failure protection.
4.1.3 Setting curent continuously adjustable device.
4.1.4 Temperature compensation.
4.1.5 Operation indication.
4.1.6 Testing mechanism.
4.1.7 Stop button.
4.1.8 Manual and automatic reset button.
4.1.9 One N.O. contact and one N.C. contact, electrically separable.
4.1.10 Mounting type: plug-in mounting with the contactor.

4.2 Protection characteristics

Item	No.	Setting current multiple		Operation time	Test conditions
Overload protection	1	1.05		No operation within 2h	Cold state start Hot state start (after No.1) Start when thermal equilibrium is reached after applying a 1 times setting current
	2	1.2		Operation within 2h	
	3	1.5		Operation with 2min	
	4	7.2		2s<Tp≤10s	
Phase failure protection	5	Any two phases	The other phase	No operation within 2h	Cold state start
		1.0	0.9		
	6	1.15	0	Operation within 2h	Hot state start (after No.5)

«Электро-Профи» - www.ep.ru

4.3 Type selection and ordering data (see the table)

Product appearance	Rated current A	Specification of matching fuse(RT 36 is recommended) A	Model of matching contactor
		gG	
 NR8-11.5	0.1~0.16	2	 NC8-06M、NC8-06M/Z NC8-09M、NC8-09M/Z NC8-12M、NC8-12M/Z
	0.16~0.25	2	
	0.25~0.4	2	
	0.4~0.63	2	
	0.63~1	4	
	1~1.6	4	
	1.6~2.5	6	
	2.5~4	10	
	4~6	16	
	5.5~8	20	
	7~10	20	
	9~13	25	
 NR8-38	0.10-0.14	2	 NC8-09、NC8-12 NC8-18、NC8-25 NC8-32、NC8-38
	0.14-0.2	2	
	0.18-0.25	2	
	0.22-0.32	2	
	0.28-0.4	2	
	0.35-0.5	2	
	0.45-0.63	2	
	0.55-0.8	4	
	0.7-1	4	
	0.9-1.25	4	
	1.1-1.6	4	
	1.4-2	6	
	1.8-2.5	6	
	2.2-3.2	10	
	2.8-4	10	
	3.5-5	16	
	4.5-6.3	16	
	5.5-8	20	
	7.5-10	20	
	9-13	25	
	12-16	35	
	14-20	50	
	18-24	50	
	23-32	63	
	30-38	80	

«Электро-Профи» - www.ep.ru

4.4 Tripping characteristics

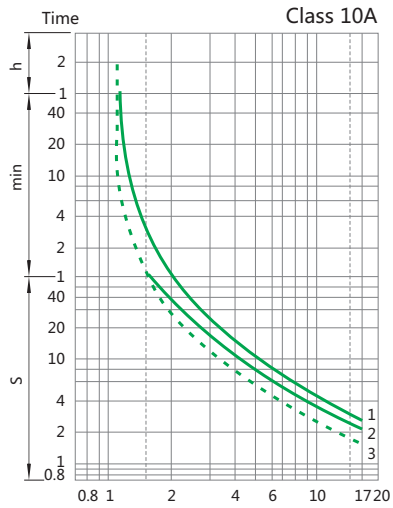

One Balanced operation, 3-phase, cold state start.
Two Balanced operation, 2-phase, cold state start.
Three Balanced operation, 3-phase, cold state start.

D

5. Overall and mounting dimensions (mm)

NR8-11.5

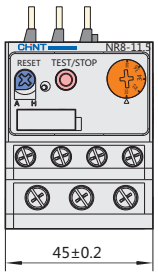

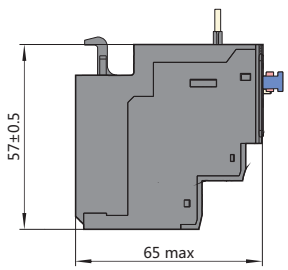

NR8-38

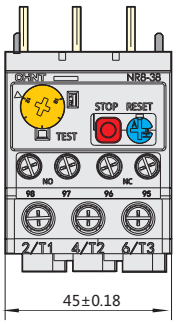

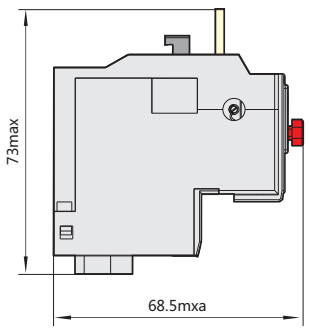

«Электро-Профи» - www.ep.ru



NRE8 Electronic Overload Relay

1. General

1.1 Certificates: CE, UKrSEPRO, UL;

1.2 Electrical ratings: AC50/60Hz, 690V;

1.3 Standards: IEC/EN 60947-4-1, UL508

2. Type designation

N Re 8 - □ / □

- Mounting version (F: independent; blank: combined)
- Rated current class
- Design sequence No.
- Electronic overload relay
- Company code

3. Features

3.1 Three-phase electronic type, tripping class10A;

3.2 Energy saving up to 80%
compared with bimetallic type;

3.3 Phase-failure protection;

3.4 Current setting continuously adjustable;

3.5 Two indicator lights available for indicating normal, overload time-delay, phase-failure and phase-failure time-delay status respectively;

3.6 Manual test mechanism;

3.7 Manual reset button;

3.8 A pair of N/C and N/O contacts;

3.9 Two mounting versions:
independent or combined with a contactor.

4. Technical data

4.1 Main Circuit: Rated insulation;
Voltage: AC 690V;
Rated frequency: 50/60Hz;

4.2 Auxiliary Circuit: Rated insulation;
Voltage: AC 400V;
Rated frequency: 50/60Hz;
See table below for other ratings.

Utilization category	AC-15		DC-13
Rated operational voltage Ue (V)	230	400	220
Rated operational current Ie (A)	2.5	1.5	0.2
Conventional heating current (A)	5		

«Электро-Профи» - www.ep.ru

4.3 Wiring. Connection of main circuit is PVC insulation copper conductor or cable. See table below for details:

Current range (A)	Cross section area (mm^2)	Length (m)	Number of piece
I≤8	1.0	1	1
8 < I≤12	1.5	1	1
12 < I≤20	2.5	1	1
20 < I≤25	4.0	1	1
25 < I≤32	6.0	1	1
32 < I≤50	10	1	1
50 < I≤65	16	1	1
65 < I≤85	25	1	1
85 < I≤115	35	1	1
115 < I≤150	50	2	1
150 < I≤175	75	2	1
175 < I≤225	95	2	1
225 < I≤250	120	2	1
250 < I≤275	150	2	1
275 < I≤350	185	2	1
350 < I≤400	240	2	1
400 < I≤500	150	2	2
500 < I≤630	185	2	2

D

4.4 Protection Characteristics

4.4.1 Operation characteristic under three-phase balanced-load status as per the table below.

Series No.	I/In	Operating time	Test condition	Ambient temperature (℃)
1	1.05	< 2h non-tripping	Cold status	(20±5)℃
2	1.20	< 2h tripping	Starts from hot status, right after item no.1	
3	1.50	≤ 2 min		
4	7.20	2s < Tp≤10s	Cold status	

Under three-phase operation, if relay current reaches and maintains 1.05 times of the current setting, the green lamp flashes and red lamp does not light up, which indicates that the relay is not at over-load time-delay status, which equals to non-operation in 2 hours in serial No. 1 of the table above. A current tolerance for serial No.1 is -3%, and a current tolerance for No.2 is +3% .
Cold status implies the status of the power re-energized of main circuit of relay 5 seconds after its power off.

4.4.2 Operation characteristic under phase-failure status as per the table below.

Series No.	I/In		Operating time Tp	Test condition	Ambient temperature ℃
	Any two phases	The third phase			
1	1.0	0.9	< 2h non-tripping	Starts from cold status	(20±5)℃
2	1.15	0	< 2h tripping	Starts from hot status, right after item No.1	

Under phase failure operation, if one phase has the current = 0, the other two phases have the current ≥1.15 times of the current setting, then, the red lamp flashes, and green lamp lights up, which indicates that the relay is at time-delay release status.
As to this table, the permissible error of the No.1 circuit is -3%, No.2 circuit +3%

«Электро-Профи» - www.ep.ru

4.5 Tripping Curve

Tripping class 10A

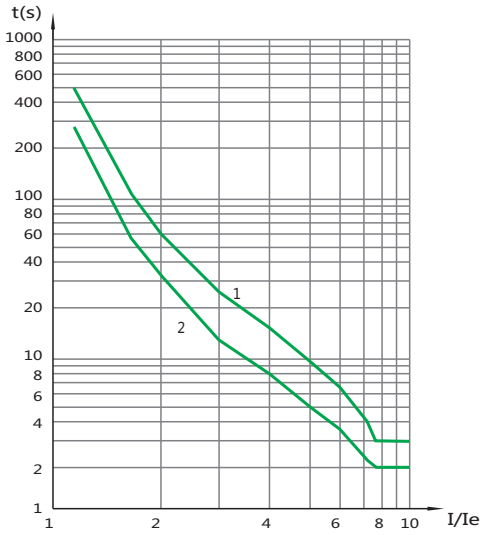

1: Cold status 2: Hot status

5. Overall and mounting dimensions (mm)

5.1 For Combined Mounting

NRE8-25



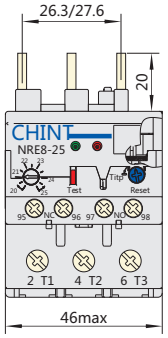

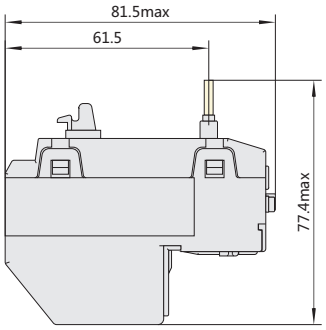

NRE8-25/F

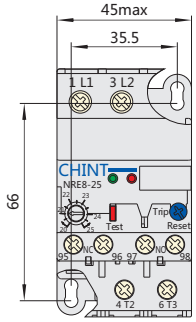

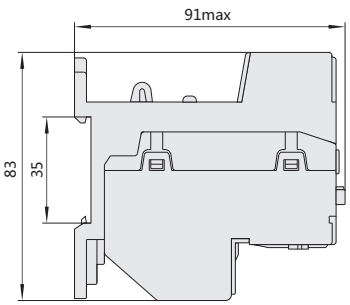

«Электро-Профи» - www.ep.ru

NRE8-40

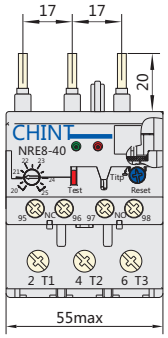

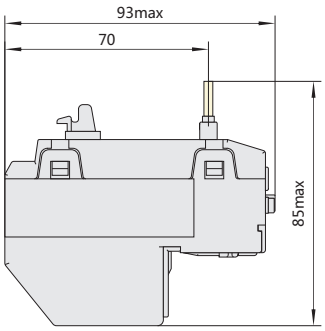

NRE8-40/F

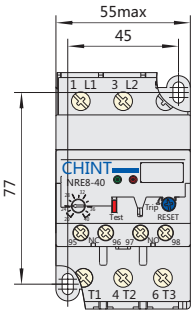

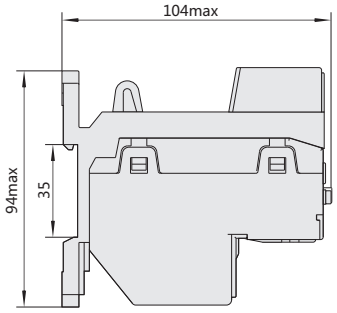

NRE8-100



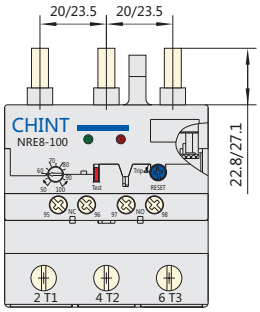

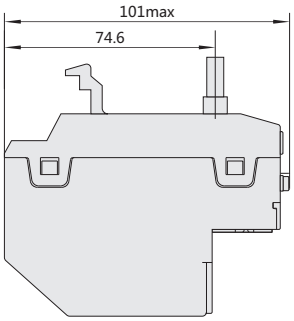

NRE8-100/F



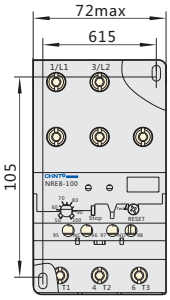

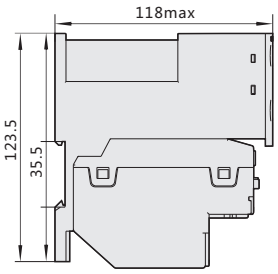

«Электро-Профи» - www.ep.ru

NRE8-200



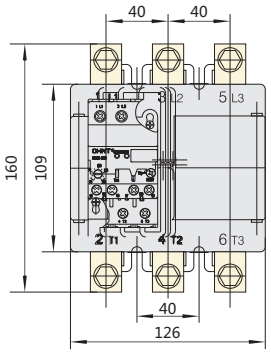

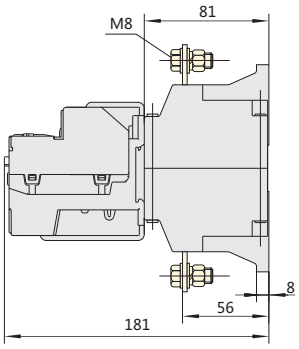

NRE8-630



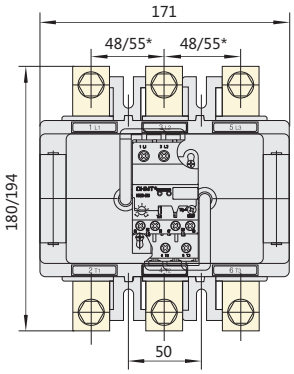

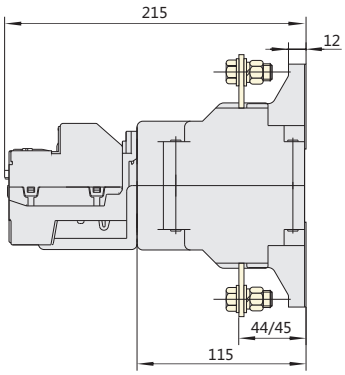

Note:Dimension with '*' for the product above 400A.

6. Applications

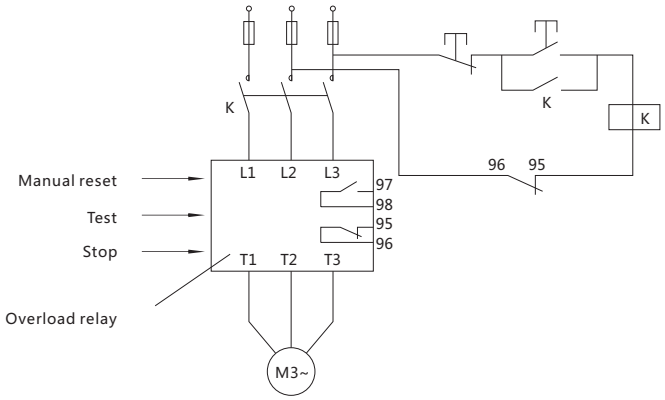

7. Accessories

7.1 Mounting base

Mounting base	Description	Application
	NRE8-25 mounting bracket	Incorporates with NRE8-25 to form an independently mounted product

«Электро-Профи» - www.ep.ru

Mounting base	Description	Application
	NRE8-40 mounting bracket	Incorporates with NRE8-40 to form an independently mounted product
	PIA-7 mounting bracket	Incorporates with NRE8-100 to form an independently mounted product

Note: NRE8-100 without mounting bracket

7.2 Assembly with contactors

Thermal overload Relay	Rated current (A)	Current setting range (A)	Model of recommended contactor	Model of recommended fuse
 NRE8-25	1.2	0.6~1.2	NC1-09~18 NC1-25~32 NC7-09~18 NC7-25~38	RT36-4 (NT00-4)
	2.4	1.2~2.4		RT36-6 (NT00-6)
	4	2~4		RT36-10 (NT00-10)
	8	4~8		RT36-16 (NT00-16)
	10	5~10		RT36-20 (NT00-20)
	12	7~12		RT36-25 (NT00-25)
	20	10~20		RT36-40 (NT00-40)
	25	20~25		RT36-50 (NT00-50)
	32	22~32		RT36-80 (NT00-80)
 NRE8-40	4	2~4	NC1-40~65 NC7-40~65	RT36-10 (NT00-10)
	8	4~8		RT36-16 (NT00-16)
	10	5~10		RT36-20 (NT00-20)
	20	10~20		RT36-40 (NT00-40)
	40	20~40		RT36-80 (NT00-80)
 NRE8-100	65	30~65	NC1-40~65,NC7-40~65 NC8-40~65	RT36-160 (NT00-160)
	100	50~100	NC1-80~95,NC7-80~95 NC8-80~100	RT36-200 (NT1-200)
 NRE8-200	120	85~120	NC2-115, NC2-150 NC2-185, NC2-225	RT36-250 (NT1-250)
	160	110~160		RT36-315 (NT2-315)
	200	140~200		RT36-400 (NT2-400)
 NRE8-630	250	170~250	NC2-225, NC2-265 NC2-330, NC2-400 NC2-500, NC2-630	RT36-500 (NT3-500)
	315	215~315		RT36-630 (NT3-630)
	400	275~400		RT36-800 (NT4-800)
	500	340~500		RT36-1000 (NT4-1000)
	630	430~630		RT36-1000 (NT4-1000)

«Электро-Профи» - www.ep.ru



NR2 Thermal Overload Relay

1. General

1.1 Certificates: CE, KEMA, UkrSEPRO, EAC, RCC, UL;

1.2 Electric ratings: AC 50/60Hz, 690V, 0.1A~630A;

1.3 Tripping class: 10A;

1.4 Mounting version:
a. Plug-in: Available for NR2-11.5, 25, 36, 93, 150;
b. Independent: Available for NR2-200, 630;

1.5 Standard: IEC/EN 60947-4-1

2. Type designation

N R 2 -□

- Current class
- Design sequence No.
- Thermal overload relay
- Company code

3. Features

3.1 3-phase bimetal

3.2 Continuously readjustable current settings

3.3 Temperature compensation

3.4 Tripping indicator

3.5 Test button

3.6 Stop button

3.7 Manual and automatic reset button

3.8 Electrically separated 1N/O plus 1N/C contact

«Электро-Профи» - www.ep.ru

4. Technical data

4.1 Protection properties

Item	Series No.	I/In		Operating time Tp	Test condition
Overload protection	1	1.05		>2 h	Start from cold status
	2	1.2		≤2 h	Start from heat status, right after item No.1
	3	1.5		≤2 min	Start from heat status, right after item No.1
	4	7.2		2s<Tp≤10s	Start from cold status
Phase failure protection	5	Any two phases	Another phase	>2 h	Start from cold status
		1.0	0.9		
	6	1.15	0	≤2 h	Start from heat status, right after item No.5

Curves

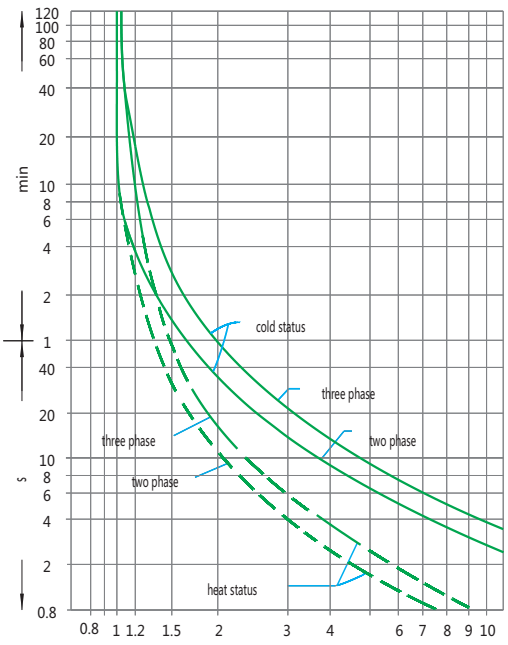

Multiple of rectified current

D

«Электро-Профи» - www.ep.ru

4.2 Main Technical Parameters

Model		NR2-11.5						
Picture								
Current class(A)		13						
Phase failure protection function		Yes						
Automatic & manual reset		Yes						
Temperature compensation		Yes						
Tripping indicator		Yes						
Test & stop pushbutton		Yes						
Mounting mode	Plug-in	Yes						
	Independent	Yes						
Auxiliary contacts	No. of contacts	1N/O+1N/C						
	Rated current (A) (AC-15 220V)	2.73						
	Rated current (A) (AC-15 380V)	1.58						
	Rated current (A) (DC-13 220V)	0.2						
		Current setting range						
Rated operational current(A)		0.1~0.16	0.16~0.25	0.25~0.40	0.40~0.63	0.63~1	1~1.6	1.25~2
Matched fuse	aM(A)	0.25	0.5	1	1	2	2	4
	gG(A)	2	2	2	2	4	4	6

Model		NR2-93						
Picture								
Current class(A)		93						
Phase failure protection function		Yes						
Automatic & manual reset		Yes						
Temperature compensation		Yes						
Tripping indicator		Yes						
Test & stop pushbutton		Yes						
Mounting mode	Plug-in	Yes						
	Independent	Yes						
Auxiliary contacts	Configuration of contacts	1N/O+1N/C						
	Rated current (A) (AC-15 220V)	2.73						
	Rated current (A) (AC-15 380V)	1.58						
	Rated current (A) (DC-13 220V)	0.2						
		Current setting range						
Rated operational current(A)		23~32	30~40	37~50	48~65	55~70	63~80	80~93
Matched fuse	aM(A)	40	40	63	63	80	80	100
	gG(A)	63	100	100	100	125	125	160

«Электро-Профи» - www.ep.ru

NR2-25								NR2-36	
									
25								36	
Yes								Yes	
Yes								Yes	
Yes								Yes	
Yes								Yes	
Yes								Yes	
Yes								Yes	
Yes								Yes	
1N/O+1N/C								1N/O+1N/C	
2.73								2.73	
1.58								1.58	
0.2								0.2	
Current setting range								Current setting range	
1.6~2.5	2.5~4	4~6	5.5~8	7~10	9~13	12~18	17~25	23~32	28~36
4	6	8	12	12	16	20	25	40	40
6	10	16	20	20	25	35	50	63	80

NR2-150			NR2-200			NR2-630				
										
150			200			630				
Yes			Yes			Yes				
Yes			Yes			Yes				
Yes			Yes			Yes				
Yes			Yes			Yes				
Yes			Yes			Yes				
Yes			No			No				
No			Yes			Yes				
1N/O+1N/C			1N/O+1N/C			1N/O+1N/C				
2.73			2.73			2.73				
1.58			1.58			1.58				
0.2			0.2			0.2				
Current setting range			Current setting range			Current setting range				
80~104	95~120	110~150	80~125	100~160	125~200	160~250	200~315	250~400	315~500	400~630
125	125	160	125	160	200	250	315	400	500	630
200	224	250	200	250	315	400	500	630	800	800

«Электро-Профи» - www.ep.ru

5. Overall and mounting dimensions (mm)

NR2-11.5



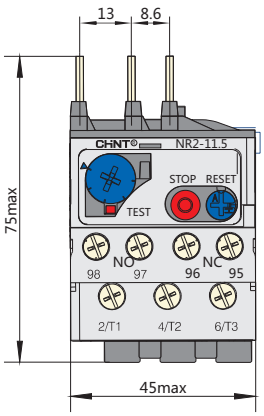

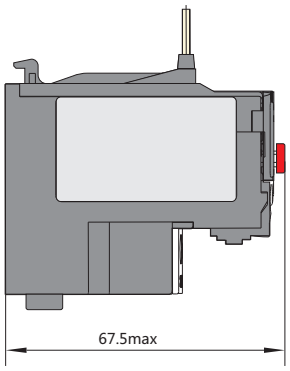

NR2-11.5 with MB-1

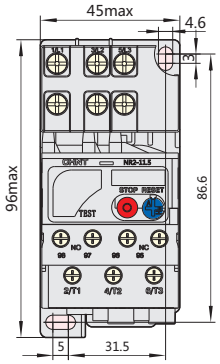

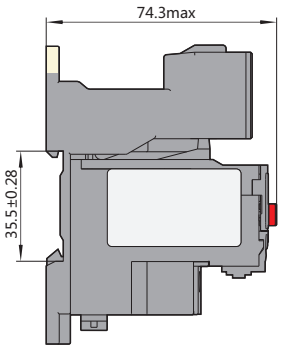

NR2-25



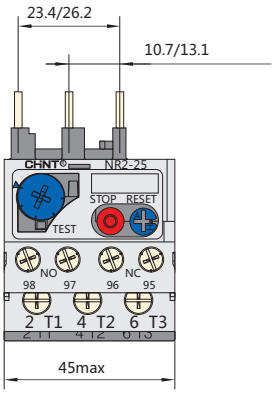

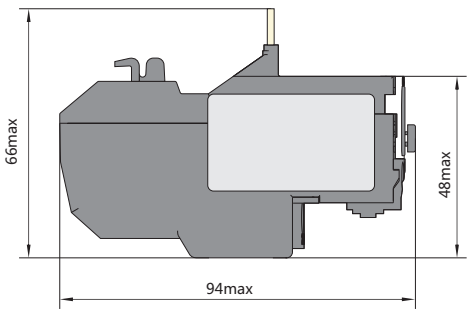

«Электро-Профи» - www.ep.ru

NR2-25 with MB-2

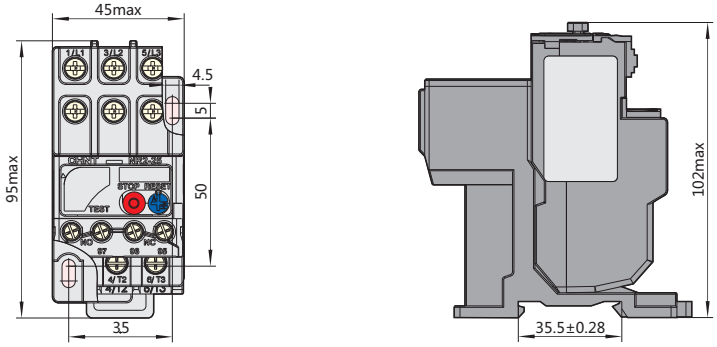

NR2-36

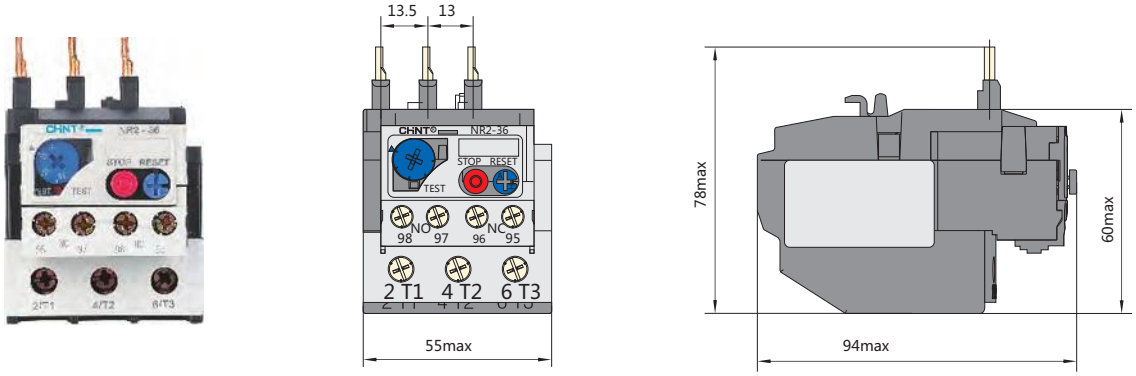

NR2-36 with MB-3

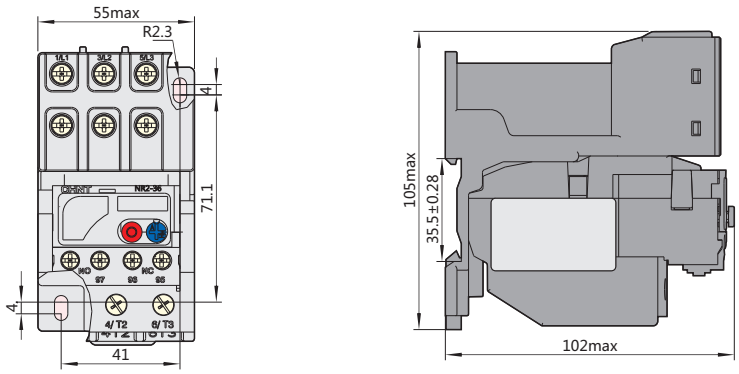

«Электро-Профи» - www.ep.ru

NR2-93



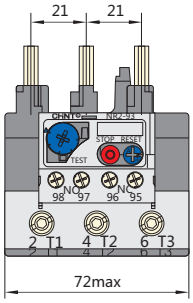

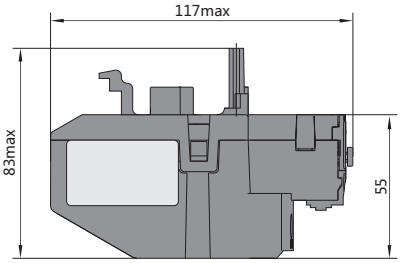

NR2-93 with MB-4

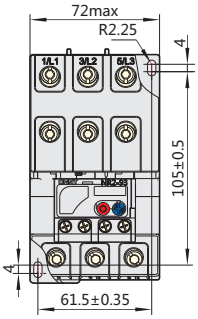

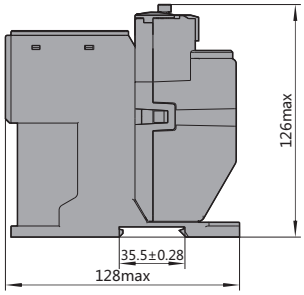

NR2-150 (matched with NC2)



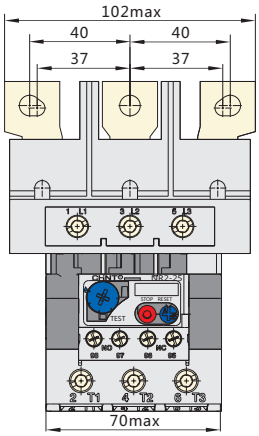

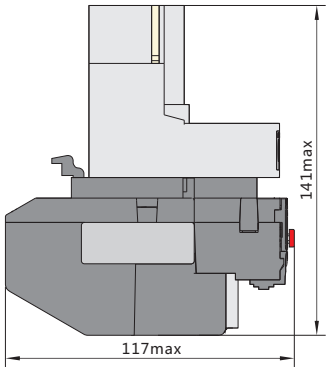

NR2-150 (matched with NC7)



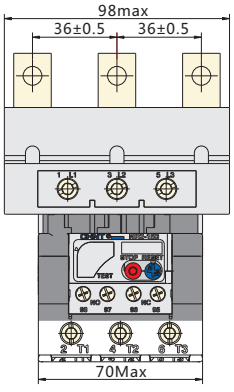

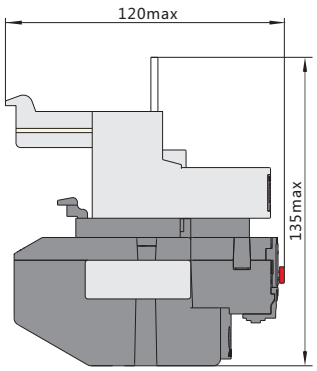

«Электро-Профи» - www.ep.ru

NR2-200



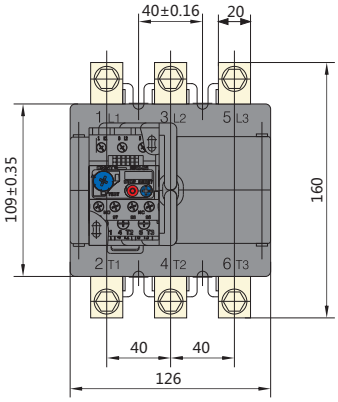

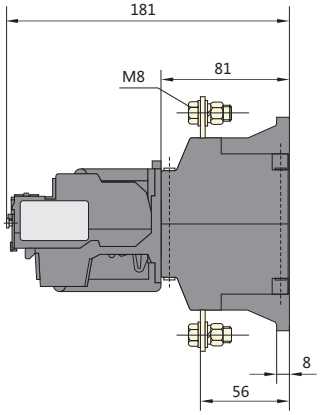

NR2-630



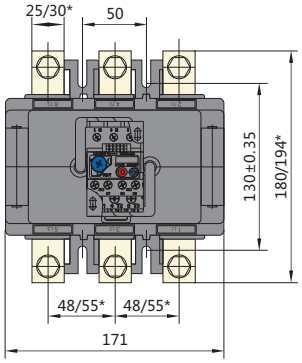

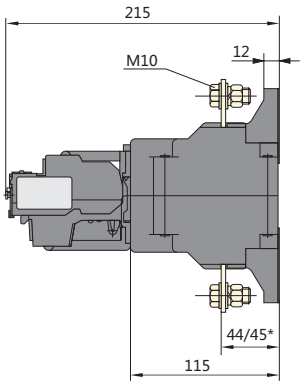

Note: Dimension with "*" for the product over 400A.

6. Wiring

Items			NR2-11.5	NR2-25	NR2-36	NR2-93	NR2-150	NR2-200	NR2-630
Cross section area of conductor mm²	Main circuit	Single core or stranded wire	1~4	1~4	4~10	4~35	25~95	25~95	70~2×240
		Wiring screw	M3.5	M4	M4	M10	M6/M8	M8	M10
	Auxiliary circuit	Single core or stranded wire	1~2.5	1~2.5	1~2.5	1~2.5	1~2.5	1~2.5	1~2.5
		Wiring screw	M3.5	M3.5	M3.5	M3.5	M3.5	M3.5	M3.5

«Электро-Профи» - www.ep.ru

7. Accessories

No.		Description	Application
1		MB-1	Incorporate with NR2-11.5 relay to form an independently mounted product
2		MB-2	Incorporate with NR2-25 relay to form an independently mounted product
3		MB-3	Incorporate with NR2-36 relay to form an independently mounted product
4		MB-4	Incorporate with NR2-93 relay to form an independently mounted product

8. Assembly with contactor

Model of overload relay	Rated current (A)	Recommended fuse type (RT16 is recommended)		Model of contactor
		aM	gG	
 NR2-11.5	0.1~0.16	0.25	2	NC6-09
	0.16~0.25	0.5	2	
	0.25~0.4	1	2	
	0.4~0.63	1	2	
	0.63~1	2	4	
	1~1.6	2	4	
	1.25~2	4	6	
	1.6~2.5	4	6	
	2.5~4	6	10	
	4~6	8	16	
	5.5~8	12	20	
	7~10	12	20	
	9~13	16	25	
 NR2-25	0.1~0.16	0.25	2	NC1-09 NC1-12 NC1-18 NC1-25 NC1-32 NC7-09~18 NC7-25~32
	0.16~0.25	0.5	2	
	0.25~0.4	1	2	
	0.4~0.63	1	2	
	0.63~1	2	4	
	1~1.6	2	4	
	1.25~2	4	6	
	1.6~2.5	4	6	
	2.5~4	6	10	
	4~6	8	16	
	5.5~8	12	20	
	7~10	12	20	
	9~13	16	25	
	12~18	20	35	
	17~25	25	50	

«Электро-Профи» - www.ep.ru

Model of overload relay	Rated current (A)	Recommended fuse type (RT16 is recommended)		Model of contactor
		aM	gG	
 NR2-36	23~32	40	63	NC1-32 NC7-32~38
	28~36	40	80	
 NR2-93	23~32	40	63	NC1-40 NC1-50 NC1-65 NC1-80 NC1-95 NC7-40~65 NC7-80~95
	30~40	40	100	
	37~50	63	100	
	48~65	63	100	
	55~70	80	125	
	63~80	80	125	
	80~93	100	160	
 NR2-150 (matched with NC2)	80~104	125	200	NC2-115 NC2-150
	95~120	125	224	
	110~150	160	250	
 NR2-150 (matched with NC7)	80~104	125	200	NC7-115 NC7-150 NC7-170
	95~120	125	224	
	110~150	160	250	
 NR2-200	80~125	125	200	NC2-115 NC2-150 NC2-185 NC2-225 NC7-115~170 NC7-205
	100~160	160	250	
	125~200	200	315	
 NR2-630	160~250	250	400	NC2-185 NC2-225 NC2-265 NC2-330 NC2-400 NC2-500 NC2-630 NC7-205~300 NC7-410~475 NC7-620
	200~315	315	500	
	250~400	400	630	
	315~500	500	800	
	400~630	630	800	

D

«Электро-Профи» - www.ep.ru



NS2 Manual Motor Starter

1. General

1.1 Certificates: SEMKO, CE, UkrSEPRO, EAC, RCC, UL;

1.2 Electric ratings: AC690V, 25A, 32A, 80A;

1.3 Standard: IEC/EN 60947-2, IEC60947-4-1

2. Type designation

N S 2 - □ □ / □

- Rated current of release
- Code of structural modification
- Frame size rated current (A)
- Design sequence No.
- AC motor starter
- Company code

3. Operating conditions

3.1 Temperature: -5℃ ~ +40℃,
average temperature in 24 hours not exceed +35℃

3.2 Altitude: not exceed 2000m

3.3 Air conditions:
At mounting site, relative humidity not exceed 50% at the max temperature of +40℃, higher relative humidity is allowable under lower temperature,
for example, RH could be 90% at +20℃

3.4 Pollution grade: Grade Ⅲ

3.5 Trip class:
10A(NS2-25, NS2-25X, NS2-32, NS2-32X,NS2-32H)
10 (NS2-80, NS2-80B)

3.6 Rated operational system:
Continuous operational system

3.7 Mounting conditions:
The inclination between the mounting plane and the vertical plane shall not exceed 5°
The product shall be installed and operated at a place without obvious shake, impact and vibration.

«Электро-Профи» - www.ep.ru

4. Technical data

4.1 Protection properties

Over-load Protection Properties

Series No.	Multiple of setting current	Initial status	Time		Expected results	Ambient temperature
1	1.05	Cold status	t≥2h		Non-tripping	+20℃±2℃
2	1.20	Heat status (right after test.1)	t < 2h		Tripping	+20℃±2℃
3	1.50	Heat status (right after test.1)	Tripping class	10A t < 2min 10 t < 4min	Tripping	+20℃±2℃
4	7.20	Cold status	Tripping class	10A 2s < t≤10s 10 4s < t≤10s	Tripping	+20℃±2℃

Phase failure protection properties

Series No.	Multiple of setting current		Initial status	Time	Expected results	Ambient temperature
	Any 2 phases	The other phase				
1	1.0	0.9	Cold status	t≥2h	Non-tripping	+20℃±2℃
2	1.15	0	Heat status (right after test.1)	t < 2h	Tripping	+20℃±2℃

Temperature compensation properties

Series No.	Multiple of setting current	Initial status	Time	Expected results	Ambient temperature
1	1.0	Cold status	t≥2h	Non-tripping	+40℃±2℃
2	1.2	Heat status (right after test.1)	t < 2h	Tripping	+40℃±2℃
3	1.5	Heat status (through 1.0 times rated current ,after thermal equilibrium is reached)	t < 2min	Tripping	+40℃±2℃
4	1.05	Cold status	t≥2h	Non-tripping	-5℃±2℃
5	1.3	Heat status (right after test.3)	t < 2h	Tripping	-5℃±2℃
6	1.5	Heat status (through 1.0 times rated current ,after thermal equilibrium is reached)	t < 4min	Tripping	-5℃±2℃

«Электро-Профи» - www.ep.ru

4.2 Technical parameters

Model			**NS2-25, NS2-25X, NS2-32,NS2-32X,NS2-32H**			
Picture						
Rated insulation voltage Ui(V)			690			
Rated operational voltage Ue(V)			230/240, 400/415, 440, 500, 690			
Rated impulse withstand voltage Uimp(V)			8000			
Regulating rang of setting current (A)			0.1~0.16	0.16~0.25	0.25~0.4	0.4~0.63
Rated current of release			0.16	0.25	0.4	0.63
Rated ultimate short-circuit breaking capacity Icu(kA)	400/415V		100	100	100	100
	660/690V		100	100	100	100
Rated service short-circuit breaking capacity Ics(kA)	400/415V		100	100	100	100
	660/690V		100	100	100	100
Arcing distance (mm)			40	40	40	40
Standard rated power of three-phase motor (kW)	230/240V		-	-	-	-
	400V		-	-	-	-
	415V		-	-	-	-
	440V		-	-	-	-
	500V		-	-	-	-
	660/690V		-	-	-	0.37
Current setting value of instantaneous electromagnetic release Ir(A)			1.5	2.4	5	8
Current rating of fuse-link of back-up fuse, which is only needed in case of Icc > Icu (Icc: prospective short-circuit breaking current)	230/240V	aM A	★	★	★	★
		gl/gG A	★	★	★	★
	400/415V	aM A	★	★	★	★
		gl/gG A	★	★	★	★
	440V	aM A	★	★	★	★
		gl/gG A	★	★	★	★
	500V	aM A	★	★	★	★
		gl/gG A	★	★	★	★
★: fuse is not required	690V	aM A	★	★	★	★
		gl/gG A	★	★	★	★
Degree of protection			IP2L0	IP2L0	IP2L0	IP2L0

«Электро-Профи» - www.ep.ru

NS2-25, NS2-25X, NS2-32,NS2-32X,NS2-32H					
					
690					
230/240, 400/415, 440, 500, 690					
8000					
0.63~1	1~1.6	1.6~2.5	2.5~4	4~6.3	6~10
1	1.6	2.5	4	6.3	10
100	100	100	100	100	100
100	100	3 (NS2-32H: 4)	3 (NS2-32H: 4)	3 (NS2-32H: 4)	3 (NS2-32H: 4)
100	100	100	100	100	100
100	100	2.25 (NS2-32H: 4)	2.25 (NS2-32H: 4)	2.25 (NS2-32H: 4)	2.25 (NS2-32H: 4)
40	40	40	40	40	40
-	-	0.37	0.75	1.1	2.2
-	0.37	0.75	1.5	2.2	4
-	-	0.75	1.5	2.2	4
0.37	0.55	1.1	1.5	3	4
0.37	0.75	1.1	2.2	3.7	5.5
0.55	1.1	1.5	3	4	7.5
13	22.5	33.5	51	78	138
★	★	★	★	★	★
★	★	★	★	★	★
★	★	★	★	★	★
★	★	★	★	★	★
★	★	★	★	50 (NS2-32H: ★)	50 (NS2-32H: ★)
★	★	★	★	63 (NS2-32H: ★)	63 (NS2-32H: ★)
★	★	★	★	50 (NS2-32H: ★)	50
★	★	★	★	63 (NS2-32H: ★)	63
★	★	16 (NS2-32H: 20)	25	32 (NS2-32H: 40)	32 (NS2-32H: 40)
★	★	20 (NS2-32H: 25)	32	40 (NS2-32H: 50)	40 (NS2-32H: 50)
IP2L0	IP2L0	IP2L0	IP2L0	IP2L0	IP2L0

D

«Электро-Профи» - www.ep.ru

Model			NS2-25, NS2-25X, NS2-32, NS2-32X				
Picture							
Rated insulation voltage Ui(V)			690				
Rated operational voltage Ue(V)			230/240, 400/415, 440, 500, 690				
Rated impulse withstand voltage Uimp(V)			8000				
Regulating rang of setting current (A)			9~14	13~18	17~23	20~25	24~32
Rated current of release			14	18	23	25	32
Rated ultimate short-circuit breaking capacity Icu(kA)	400/415V		15 (NS2-32H: 50)	15 (NS2-32H: 50)	15 (NS2-32H: 50)	15 (NS2-32H: 50)	15 (NS2-32H: 50)
	660/690V		3 (NS2-32H: 4)	3 (NS2-32H: 4)	3 (NS2-32H: 4)	3 (NS2-32H: 4)	3 (NS2-32H: 4)
Rated service short-circuit breaking capacity Ics(kA)	400/415V		7.5 (NS2-32H: 25)	7.5 (NS2-32H: 25)	7.5 (NS2-32H: 25)	7.5 (NS2-32H: 25)	7.5 (NS2-32H: 25)
	660/690V		2.25 (NS2-32H: 4)	2.25 (NS2-32H: 4)	2.25 (NS2-32H: 4)	2.25 (NS2-32H: 4)	2.25 (NS2-32H: 4)
Arcing distance (mm)			40	40	40	40	40
Standard rated power of three-phase motor (kW)	230/240V		3	4	5.5	5.5	7.5
	400V		5.5	7.5	11	11	15
	415V		5.5	9	11	11	15
	440V		7.5	9	11	11	15
	500V		7.5	9	11	15	18.5
	660/690V		9	11	15	18.5	25
Current setting value of instantaneous electromagnetic release Ir(A)			170	223	327	327	416
Current rating of fuse-link of back-up fuse, which is only needed in case of Icc > Icu (Icc: prospective short-circuit breaking current)	230/240V	aM A	★	★	80 (NS2-32H: ★)	80 (NS2-32H: ★)	80 (NS2-32H: ★)
		gl/gG A	★	★	100 (NS2-32H: ★)	100 (NS2-32H: ★)	100 (NS2-32H: ★)
	400/415V	aM A	63 (NS2-32H: ★)	63 (NS2-32H: 100)	80 (NS2-32H: 100)	80 (NS2-32H: 100)	80 (NS2-32H: 100)
		gl/gG A	80 (NS2-32H: ★)	80 (NS2-32H: 125)	100 (NS2-32H: 125)	100 (NS2-32H: 125)	100 (NS2-32H: 125)
	440V	aM A	50	50 (NS2-32H: 63)	63 (NS2-32H: 80)	63 (NS2-32H: 80)	63 (NS2-32H: 80)
		gl/gG A	63	63 (NS2-32H: 80)	80 (NS2-32H: 100)	80 (NS2-32H: 100)	80 (NS2-32H: 100)
	500V	aM A	50	50	50	50	50
		gl/gG A	63	63	63	63	63
★: fuse is not required	690V	aM A	40 (NS2-32H: 50)	40 (NS2-32H: 50)	40 (NS2-32H: 50)	40 (NS2-32H: 50)	40 (NS2-32H: 50)
		gl/gG A	50 (NS2-32H: 63)	50 (NS2-32H: 63)	50 (NS2-32H: 63)	50 (NS2-32H: 63)	50 (NS2-32H: 63)
Degree of protection			IP2L0	IP2L0	IP2L0	IP2L0	IP2L0

«Электро-Профи» - www.ep.ru

NS2-80B			
			
690			
230/240, 400/415			
8000			
16~25	25~40	40~63	56~80
25	40	63	80
15	15	15	- 15
-	-	-	-
7.5	7.5	7.5	7.5
-	-	-	-
50	50	50	50
5.5	11	15	22
11	18.5	30	40
11	22	33	45
-	-	-	-
-	-	-	-
-	-	-	-
327	480	756	960
★	★	★	★
★	★	★	★
250	250	315	315
315	315	400	400
-	-	-	-
-	-	-	-
-	-	-	-
-	-	-	-
-	-	-	-
-	-	-	-
IP2L0	IP2L0	IP2L0	IP2L0

D

«Электро-Профи» - www.ep.ru

Model			NS2-80					
Picture								
Rated insulation voltage Ui(V)			690					
Rated operational voltage Ue(V)			400/415 660/690					
Rated impulse withstand voltage Uimp(V)			8000					
Regulating rang of setting current (A)			20-25	23-32	30-40	37-50	48-65	63-80
Rated current of release			25	32	40	50	65	80
Rated ultimate short-circuit breaking capacity Icu(kA)	400/415V		50	50	50	50	50	50
	660/690V		4	4	4	4	4	4
Rated service short-circuit breaking capacity Ics(kA)	400/415V		17.5	17.5	17.5	17.5	17.5	17.5
	660/690V		2	2	2	2	2	2
Arcing distance (mm)			50	50	50	50	50	50
Standard rated power of three-phase motor (kW)	400V		11	15	18.5	22	30	37
	415V		11	15	18.5	22	30	37
	660/690V		18.5	22	37	45	55	63
Current setting value of instantaneous electromagnetic release Ir(A)			350	448	560	700	910	1120
Current rating of fuse-link of back-up fuse, which is only needed in case of Icc > Icu (Icc: prospective short-circuit breaking current)	400/415V	aM A	250	250	250	315	315	315
		gl/gG A	315	315	315	400	400	400
	690V	aM A	160	160	160	200	200	200
		gl/gG A	200	200	200	250	250	250
Degree of protection			IP2L0					

5. Other

5.1 Starters accessories

5.1.1 Type, model and specifications of accessories (see Table 10).

Table 10

Description of accessories	Accessories Model					Accessories Specifications
	NS2-25, NS2-32 applies	NS2-25X, NS2-32X applies	NS2-32H applies	NS2-80 applies	NS2-80B applies	
Undervoltage release	NS2-UV110	NS2-UV110	NS2-UV110	NS2-UV110	-	110~115V, 50Hz ; 127V,60Hz
	NS2-UV220	NS2-UV220	NS2-UV220	NS2-UV220	-	220~240V, 50Hz
	NS2-UV380	NS2-UV380	NS2-UV380	NS2-UV380	-	380~400V, 50Hz ; 440V,60Hz
Shunt release	NS2-SH110	NS2-SH110	NS2-SH110	NS2-SH110	-	110~115V, 50Hz ; 127V,60Hz
	NS2-SH220	NS2-SH220	NS2-SH220	NS2-SH220	-	220~240V, 50Hz
	NS2-SH380	NS2-SH380	NS2-SH380	NS2-SH380	-	380~400V, 50Hz ; 440V,60Hz
Instantaneous auxiliary contact (front hanging)	NS2-AE20	NS2-AE20	NS2-AE20	NS2-AE20	-	2NO
	NS2-AE11	NS2-AE11	NS2-AE11	NS2-AE11	-	1NO+1NC
Instantaneous auxiliary contact (side hanging)	NS2-AU20	NS2-AU20	NS2-AU20	NS2-AU20(NS2-80)	NS2-AU20(NS2-80B)	2NO
	NS2-AU11	NS2-AU11	NS2-AU11	NS2-AU11(NS2-80)	NS2-AU11(NS2-80B)	1NO+1NC
Fault signal contact and instantaneous auxiliary contact	NS2-FA0110	NS2-FA0110	NS2-FA0110	-	-	1NC+1NO
	NS2-FA0101	NS2-FA0101	NS2-FA0101	-	-	1NC+1NC
	NS2-FA1010	NS2-FA1010	NS2-FA1010	-	-	1NO+1NO
	NS2-FA1001	NS2-FA1001	NS2-FA1001	-	-	1NO+1NC
Waterproof mounting box	NS2-MC	WPB-1	-	-	-	-
Mounting box with emergency stop button	NS2-MC01	-	-	-	-	-

«Электро-Профи» - www.ep.ru

5.1.2 Undervoltage trip device

NS2-UV110, UV220, UV380'S, performance:

a. Rated insulation voltage Ui (V): 690.

b. Operating characteristics: When the voltage drops to 70% and 35% of the rated voltage range, undervoltage trip device shall act;

Undervoltage trip device in the power supply voltage is less than 35% of the rated voltage of the trip device, the undervoltage trip device should be able to prevent the starter from closing;

when the power supply voltage is equal to or greater than 85% of the rated voltage of the trip device, the undervoltage trip device should guarantee closure of the starter.

5.1.3 The characteristics of the shunt trip

NS2-SH110, SH220, SH380:

a. Rated insulation voltage Ui (V): 690.

b. Operating characteristics: the operating voltage range of the shunt trip device is rated working voltage of 70% ~ 110%.

5.1.4 Characteristics of the instantaneous auxiliary contact NS2-Ae20, AE11 (front hanging)

a. rated insulation voltage Ui (V): 250;

b. agreed thermal current Ith (A): 2.5;

c. type , rated voltage and rated operating current (see Table 11) of instantaneous auxiliary contacts.

NS2-UV



NS2-SH



NS2-AE



D

Table 11

Utilization category	AC-15				DC-13		
Rated operating voltage Ue (V)	24	48	110/127	230/240	24	48	60
Rated operating current Ie (A)	2	1.25	1	0.5	1	0.3	0.15
Normal operating power P (W)	48	60	127	120	24	15	9

«Электро-Профи» - www.ep.ru

5.1.5 Instantaneous auxiliary contact NS2-AU20, AU11 performance (side hanging):

a. rated insulation voltage Ui (V): 690;

b. agreed thermal current Ith (A): 6;

c. type, rated voltage and rated operating current of the instantaneous auxiliary contacts(see Table 12).

NS2-AU



Table 12

Utilization category	AC-15							DC-13				
Rated operating voltage Ue (V)	48	110/127	230/240	380/415	440	500	690	24	48	60	110	220
Rated operating current Ie (A)	6	4.5	3.3	2.2	1.5	1	0.6	6	5	3	1.3	0.5
Normal operating power P (W)	300	500	720	850	650	500	400	140	240	180	140	120

5.1.6 Characteristics of the fault signal contact and instantaneous auxiliary contact NS2-FA:

Fault signal contact and instantaneous auxiliary contact NS2-FA, consist of the fault signal contact and instantaneous auxiliary contact. They have different use types and characteristics.

a. rated insulation voltage Ui (V): 690;

b. agreed thermal currents of instantaneous auxiliary contacts: 6, agreed thermal current of fault signal contacts Ith (A): 2.5;

c. the use type, rated voltage and rated work current (see Table 12) of the instantaneous auxiliary contact same as the NS2-AU instantaneous auxiliary contact; the use type, rated voltage and rated operating current (see Table 13) of the fault signal contacts.

NS2-FA



Table 13

Utilization category	AC-14				DC-13		
Rated operating voltage Ue (V)	24	48	110/127	230/240	24	48	60
Rated operating current Ie (A)	1.5	1	0.5	0.3	1	0.3	0.15
Normal operating power P (W)	36	48	72	72	24	15	9
Operating performance (time)	1000	1000	1000	1000	1000	1000	1000

5.1.7 Non-normal making and breaking capacity (see Table 14) of fault signal contact and instantaneous auxiliary contact.

Table 14

Use type	Connection		Disconnection				On-off operation cycles and operating frequency		
	I/Ie	U/Ue	CosΦ or T0.95	I/Ie	U/Ue	CosΦ or T0.95	Operating cycles	Operating cycles per minutes	Energize Time
AC-14	6	1.1	0.7	6	1.1	0.7	10	2	0.05
AC-15	10	1.1	0.3	10	1.1	0.3	10	2	0.05
DC-13	1.1	1.1	6Pe	1.1	1.1	6Pe	10	2	0.05

Note: Pe≥50W, T0.95 upper limit≈6Pe≤300ms.

«Электро-Профи» - www.ep.ru

6. Overall and mounting dimension (mm)

NS2-25, NS2-32

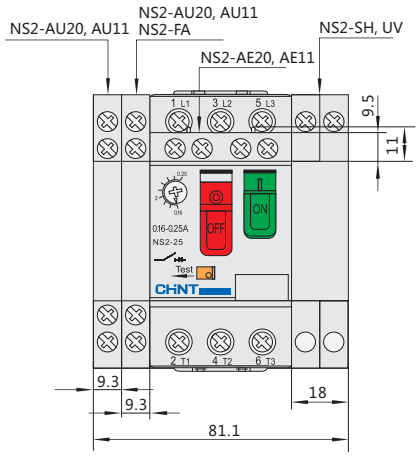

NS2-25X, NS2-32X, NS2-32H

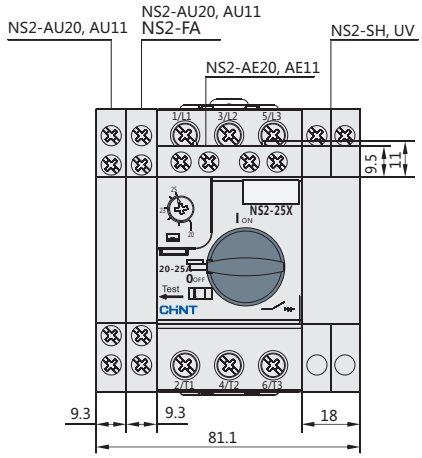

NS2-80

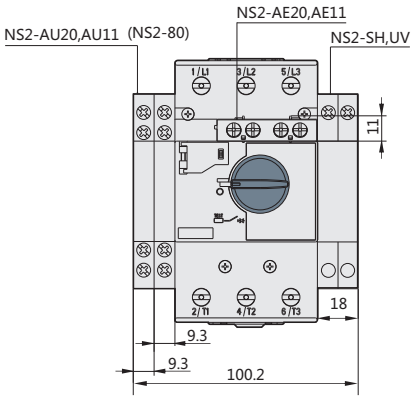

NS2-25, NS2-32

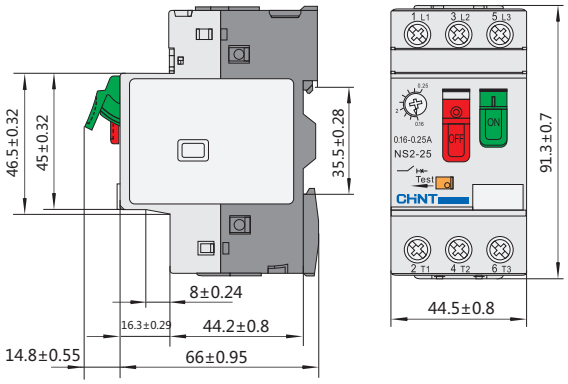

NS2-25X, NS2-32X

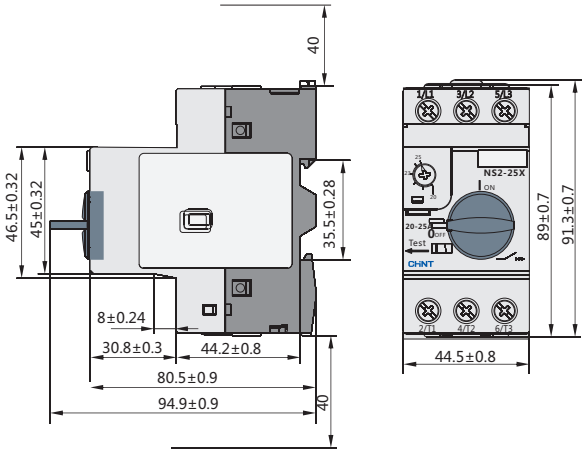

NS2-32H

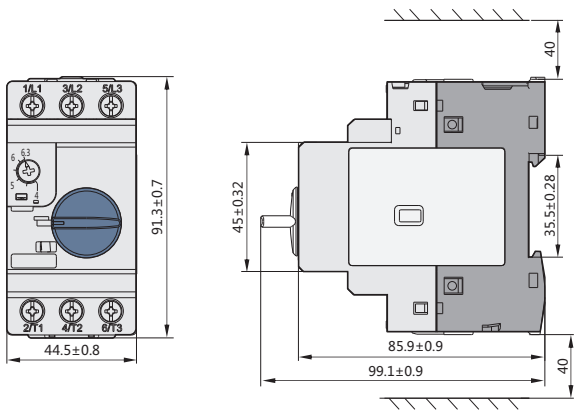

«Электро-Профи» - www.ep.ru

NS2-80B

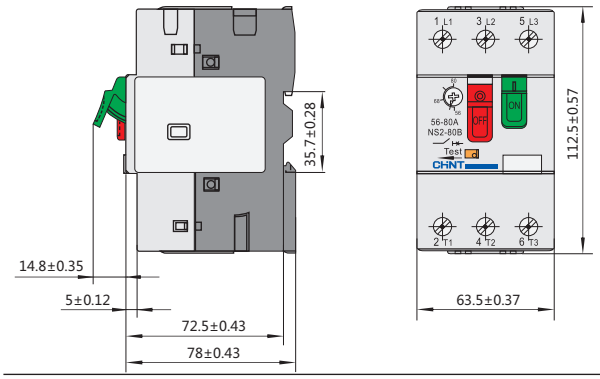

NS2-80

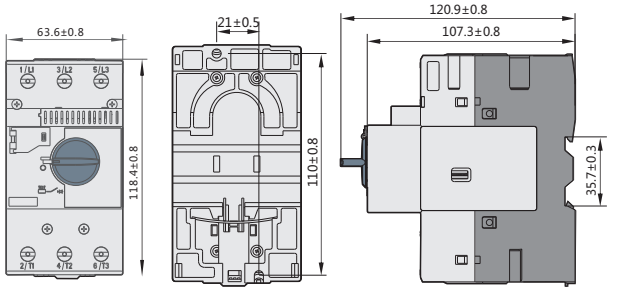

NS2-MC

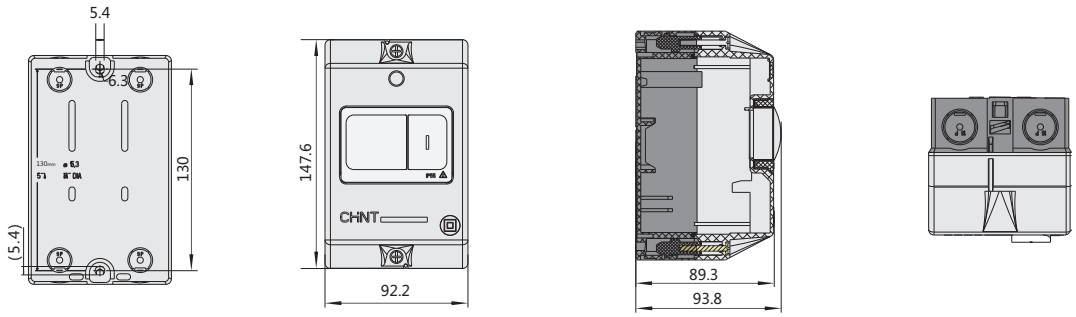

NS2-MC01

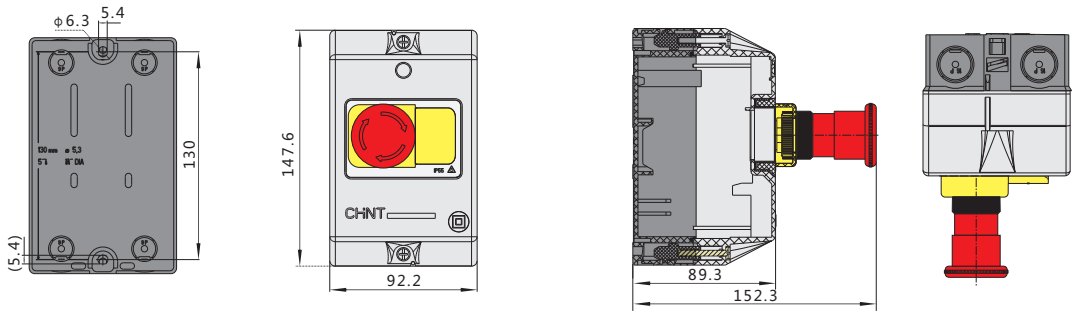

WPB-1

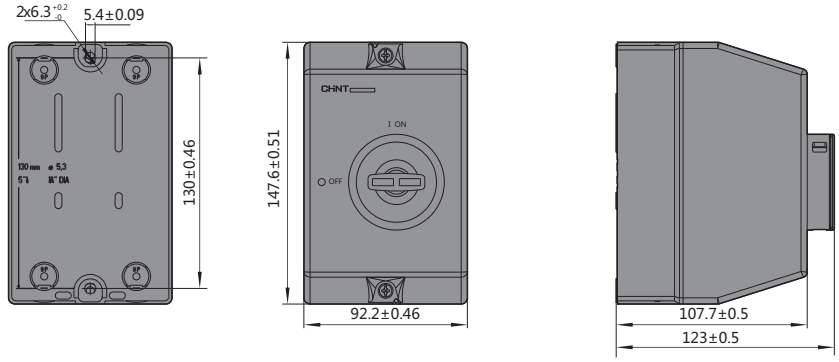

«Электро-Профи» - www.ep.ru

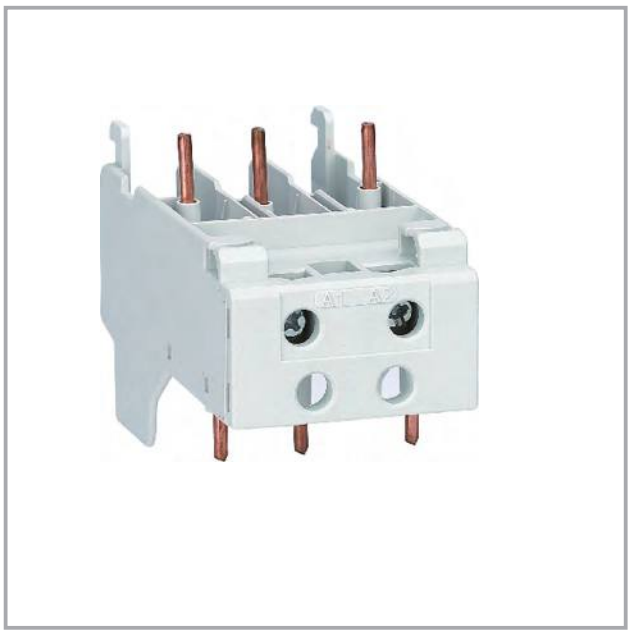

CC Conversion Connectors

1. General

CC conversion connectors are used to connect AC contactor and starter to be a composite apparatus, for the circuits with AC current frequency 50HZ and rated operating voltage up to 690V. CC-2 (NS2) conversion connector is used for NC8-38 AC contactor and NS2-32H starter, and CC-3 (NS2) conversion connector is used for NC8-65 AC contactor and NS2-80 starter. After connecting the AC contactor and starter as a composite apparatus, CC connectors are applicable for various power distribution systems or motor protection and control systems. Conformed standards: IEC60947-1 Low-voltage Switchgear and Controlgear - Part 1: General rules.

2. Product Features

CC connectors combine AC contactor and starter as a composite apparatus, can reduce the wiring and improve the system operation reliability.

CC connectors are composed of shell, main circuit connection and auxiliary circuit connection , can connect the circuits well.

The connector leads the coil terminals of AC contactor to the above of the product, and reliable cable trough is designed to facilitate the customers' wiring.

3. Type designation

CC - □ (NS2)

- CC: Company code
- □: Design sequence No.
- (NS2): Suitable for NS2 starter

4.Operating Conditions

4.1 Ambient air temperature: -5℃~+40℃ , daily average not more than +35℃.

4.2 Altitude: Not exceed 2000m. If it exceeds 2000m, the product should be used with reduced capacity. It is proposed that the altitude increased by each 1000m, the capacity should be reduced by 10%.

4.3 Humidity: When the ambient air temperature is +40℃, the air relative humidity doesn' t exceed 50%; at a lower temperature, the humidity could be higher. When the average minimum temperature is +25℃,the average maximum relativehumidity is 90%, considering the product surface condensation resulting from the temperature variation.

4.4 Pollution grade: 3.

4.5 Installation category: Ⅲ.

4.6 The external magnetic field of mounting place should not exceed 5 times earth magnetism at any direction; it should have no explosive or corrosive gas; no rain or snow attack; and should be dry and ventilated.

D

«Электро-Профи» - www.ep.ru

5. Main Technical Parameters

Table 1 Main Circuit Parameters

Model	CC -2 (NS 2)	CC -3(NS 2)
Rated operating voltage Ue (V)	690	690
Rated insulation voltage Ui (V)	690 and below	690 and below
Rated impulse withstand voltage Uimp (kV)	6	6
Rated operating current Ie max (A)	32	65
Number of poles	3P	3P

6. Installation

Fig.1 Outline and Installing Dimensions of CC-2(NS2)

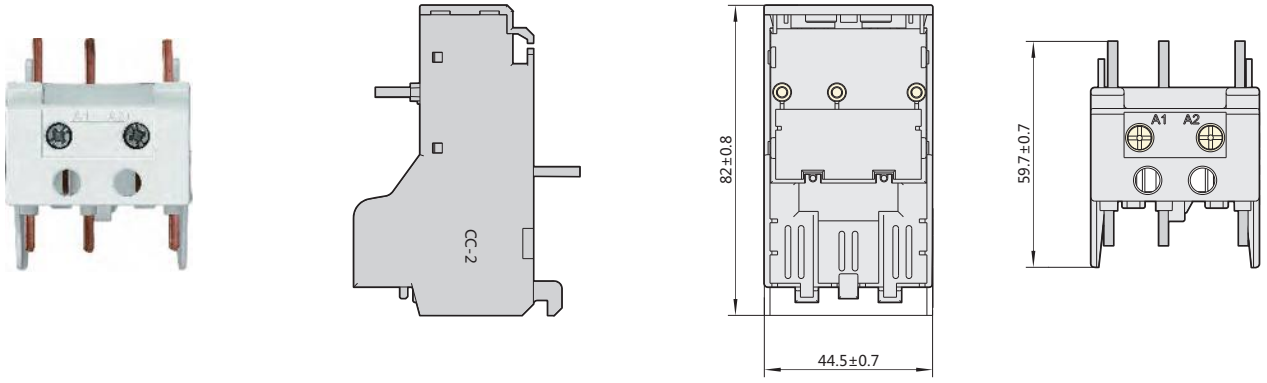

Fig.2 Outline and Installing Dimensions of CC-3(NS2)

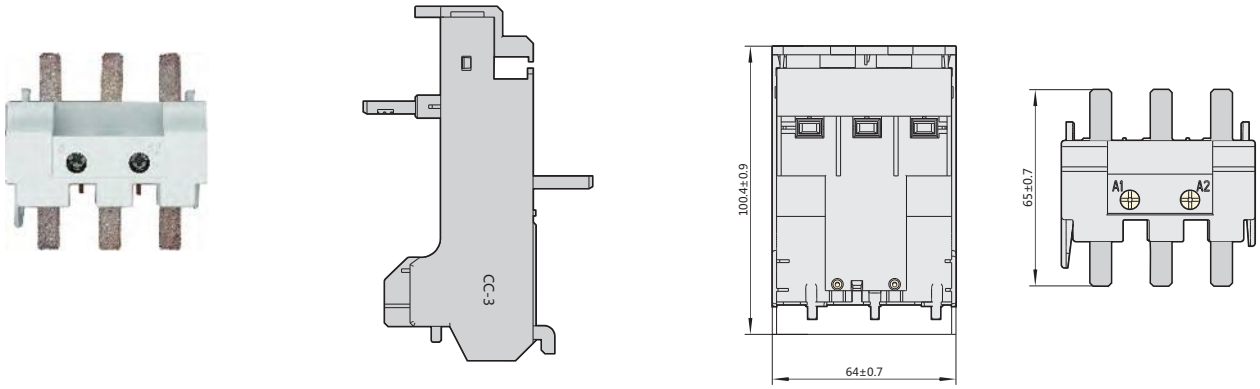

«Электро-Профи» - www.ep.ru

Fig.3 Outline and Installing Dimensions of CC-2(NS2) after assembly with the starter and contactor

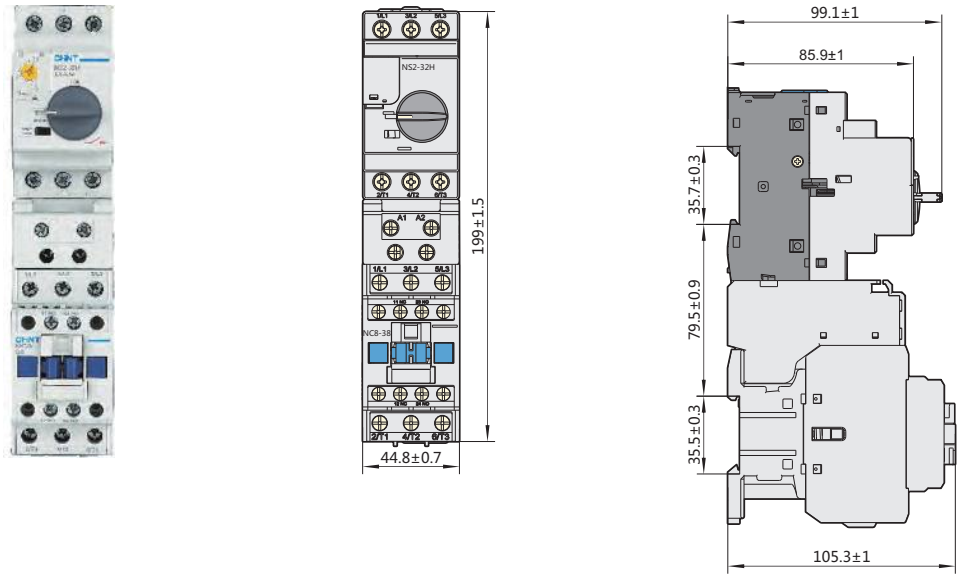

Fig.4 Outline and Installing Dimensions of CC-3(NS2) after assembly with the starter and contactor

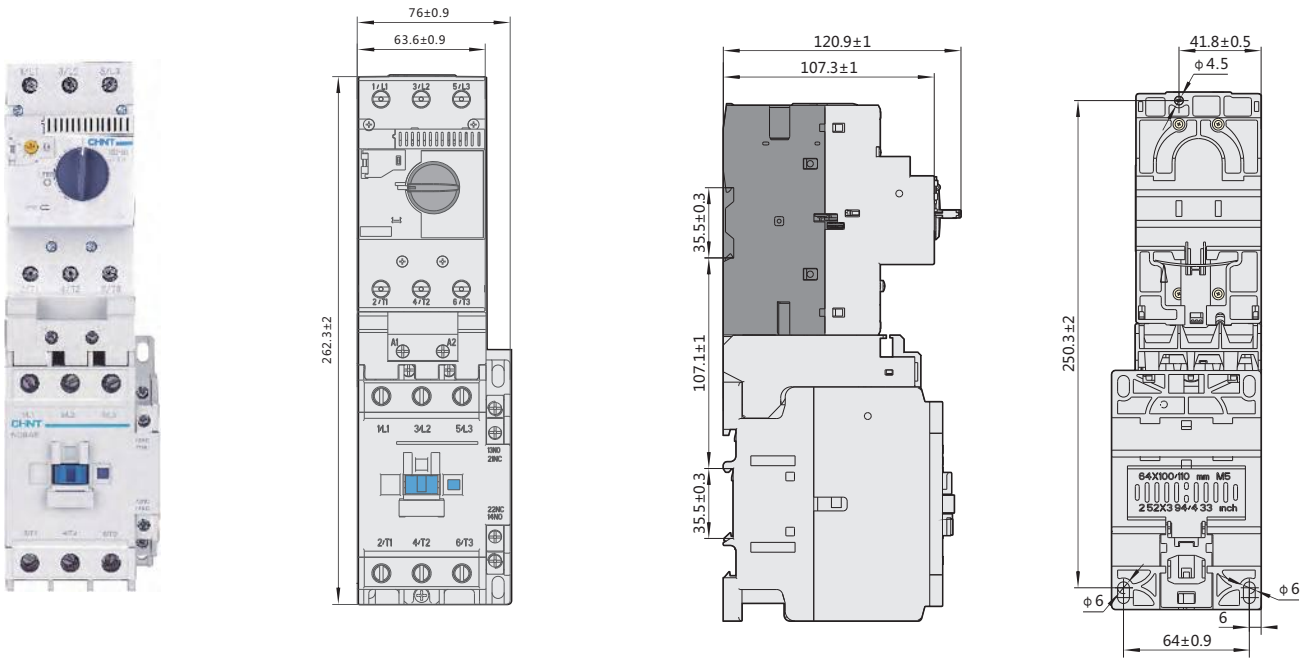

«Электро-Профи» - www.ep.ru



NQ2 Direct On-line Starter

1. General

1.1 NQ2 series electromagnetic starter
("starter" for short hereinafter) applies mainly to
circuit with AC current of 50Hz (or 60Hz),
rated operational voltage of 660V
and rated controlled power up to 33kW
(current up to 68A)
for using to control the direct start
and halt of the electromotor to protect the motor
from overload and phase failure.

1.2 The starter conforms to standards IEC/EN60947-4-1

2. Type designation

N Q 2-□ □/□

- Rated control power code (AC-3, 380V): 1~4
- Structure code:
  Blank: non- reversing type without pushbutton
  P: with pushbutton
  N: reversing type
  NB: reversing type without thermal relay
- Frame level power code
- Design sequence No.
- Starter
- Company code

«Электро-Профи» - www.ep.ru

3. Technical data

3.1 NQ2-15, 33

Model	Conventional heating current Ith (A)	Rated operational current Ie (A)	Rated power (AC-3) (kW)			Model of matched contactor	Model of matched relay	Range of setting current (A)
			660V	380V	220V			
NQ2-15/1	13	12	7.5	5.5	3	NC1-1210	NR2-25	0.1~0.16
								0.16~0.25
								0.25~0.4
								0.4~0.63
								0.63~1
								1~1.6
								1.25~2
								1.6~2.5
								2.5~4
								4~6
								5.5~8
								7~10
								9~13
NQ2-15/2	18	18	10	7.5	4	NC1-1810		12~18
NQ2-15/3	25	25	15	11	5.5	NC1-2510		17~25
NQ2-15/4	36	32	18.5	15	7.5	NC1-3210	NR2-36	23~32
								28~36
NQ2-33/1	52	52	33	25	15	NC1-6511	NR2-93	23~32
								30~40
								37~50
								48~65
NQ2-33/2	68	68	37	33	25	NC1-9511		55~70
								63~80
								80~93

3.2 NQ2-15P, 33P

Model	Conventional heating current Ith (A)	Rated operational current Ie (A)	Rated power (AC-3) (kW)			Model of matched contactor	Model of matched relay	Model of matched pushbutton	Range of setting current (A)
			660V	380V	220V				
NQ2-15P/1	13	12	7.5	5.5	3	NC1-1210	NR2-25	Start: NP2-EA31 Stop: NP2-EA42	0.1~0.16
									0.16~0.25
									0.25~0.4
									0.4~0.63
									0.63~1
									1~1.6
									1.25~2
									1.6~2.5
									2.5~4
									4~6
									5.5~8
									7~10
									9~13
NQ2-15P/2	18	18	10	7.5	4	NC1-1810			12~18
NQ2-15P/3	25	25	15	11	5.5	NC1-2510			17~25
NQ2-15P/4	36	32	18.5	15	7.5	NC1-3210	NR2-36		23~32
									28~36
NQ2-33P/1	52	52	33	25	15	NC1-6511	NR2-93		23~32
									30~40
									37~50
									48~65
NQ2-33P/2	68	68	37	33	25	NC1-9511			55~70
									63~80
									80~93

«Электро-Профи» - www.ep.ru

3.3 NQ2-15 N

Model	Conventional heating current Ith (A)	Rated operational current Ie (A)	Rated power (AC-3) (kW)			Model of matched contactor	Model of matched relay	Range of setting current (A)
			660V	380V	220V			
NQ2-15N/1	13	12	7.5	5.5	3	NC1-1210	NR2-25	0.1~0.16
								0.16~0.25
								0.25~0.4
								0.4~0.63
								0.63~1
								1~1.6
								1.25~2
								1.6~2.5
								2.5~4
								4~6
								5.5~8
								7~10
								9~13
NQ2-15N/2	18	18	10	7.5	4	NC1-1810		12~18
NQ2-15N/3	25	25	15	11	5.5	NC1-2510		17~25
NQ2-15N/4	36	32	18.5	15	7.5	NC1-3210	NR2-36	23~32
								28~36

3.4 NQ2-15NB

Model	Conventional heating current Ith (A)	Rated operational current Ie (A)	Rated power (AC-3) (kW)			Model of matched contactor
			660V	380V	220V	
NQ2-15NB/1	13	12	7.5	5.5	3	NC1-1201N
NQ2-15NB/2	18	18	10	7.5	4	NC1-1801N
NQ2-15NB/3	25	25	15	11	5.5	NC1-2501N
NQ2-15NB/4	36	32	18.5	15	7.5	NC1-3201N

Altitude: not exceeding 2000m; Temperature of ambient air: -5℃~+40℃
Rated control supply voltage (AC 50Hz): 24V, 36V, 48V, 110V, 127V, 220V, 380V, 415V
Mechanical life: 1,000,000 circles; Electric life: 500,000 circles; IP40

4. Overall and mounting dimensions (mm)

NQ2-15





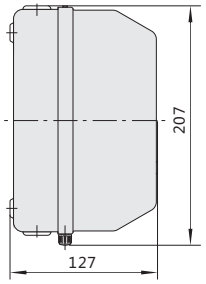

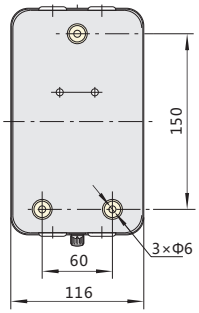

«Электро-Профи» - www.ep.ru

NQ2-15P

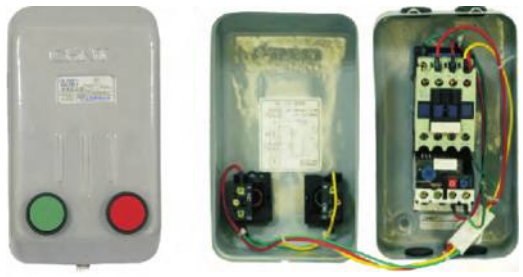

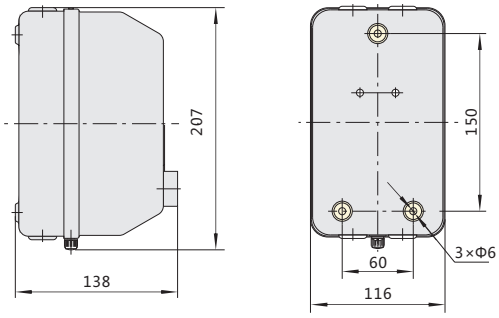

NQ2-15N



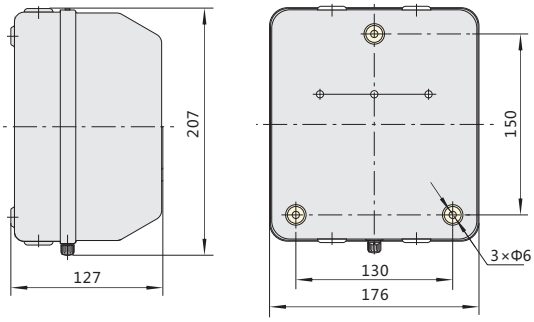

NQ2-15NB



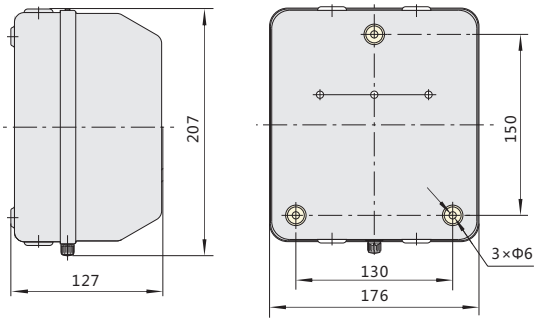

NQ2-33



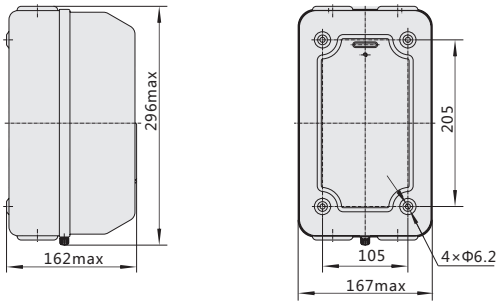

D

NQ2-33P





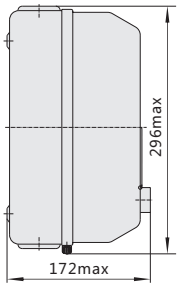

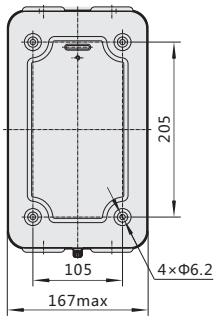

5. Wiring Diagram

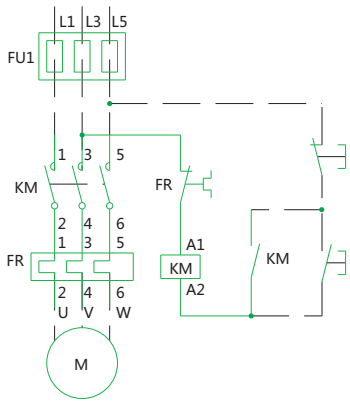

Control supply voltage is as the same as the main circuit voltage (three-phrase)

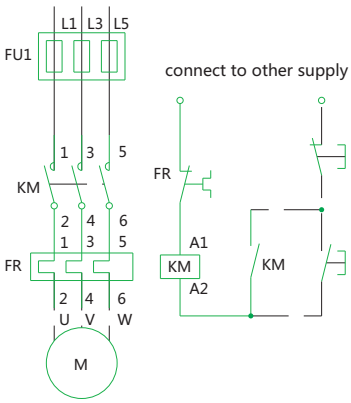

Control supply voltage is not as the same as the main circuit voltage (three-phrase)

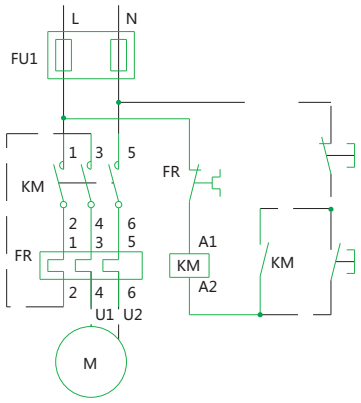

Control supply voltage is as the same as the main circuit voltage (single-phrase)

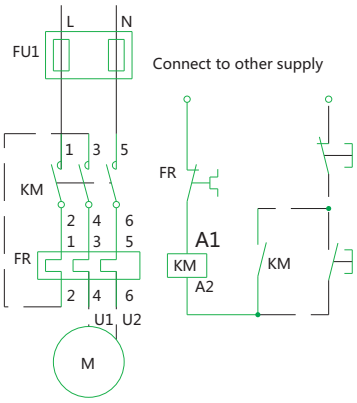

Control supply voltage is not as the same as the main circuit voltage (single-phrase)

«Электро-Профи» - www.ep.ru



NQ3 Series
DOL Electromagnetic Starter

1. General

1.1 NQ3 series electromagnetic starter ("starter" for short hereinafter) applies mainly to circuit with AC current of 50Hz (or 60Hz), rated operational voltage of 660V and rated controlled power up to 11kW (current up to 22A) for using to control the direct start and halt of the electromotor to protect the motor from overload and phase failure.

1.2 The starter conforms to standards IEC/EN60947-4-1

2. Type designation

N Q 3 - □ P

- P: Code of structure characteristic: P means with buttons
- □: Code of power grade of the bracket
- 3: Design code name
- Q: Electromagnetic starter
- N: Characteristic code of the enterprise

3. Technical data

Altitude: not exceeding 2000m;
Temperature of ambient air: -5℃~+40℃
Rated control supply voltage (AC 50Hz):
24V, 36V, 48V, 110V, 127V, 220V, 380V, 415V
Mechanical life: 1,000,000 circles;
Electric life: 500,000 circles;
IP55

«Электро-Профи» - www.ep.ru

Table 1 Basic Model and main technical parameter of the starter

Model	Rated working current (A)	Maximum rated Power (kW)			Model of equipped AC contactor	TOR matched	Range of setting current A
		AC-3					
		660V	380V	220V			
NQ3-5.5P	12	7.5	5.5	3	NC1-1810	NR2-25	0.1~0.16
							0.16~0.25
							0.25~0.4
							0.4~0.63
							0.63~1
							1~1.6
							1.25~2
							1.6~2.5
							2.5~4
							4~6
							5.5~8
							7~10
							9~13
NQ3-11P	22	15	11	5.5	NC1-3210		12~18
							17~25

4. Overall and mounting dimension (mm)

NQ3-5.5P

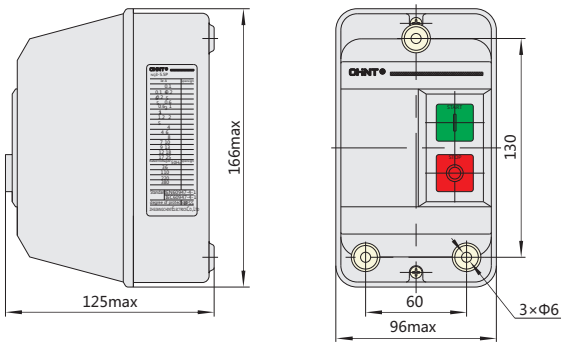

NQ3-11P

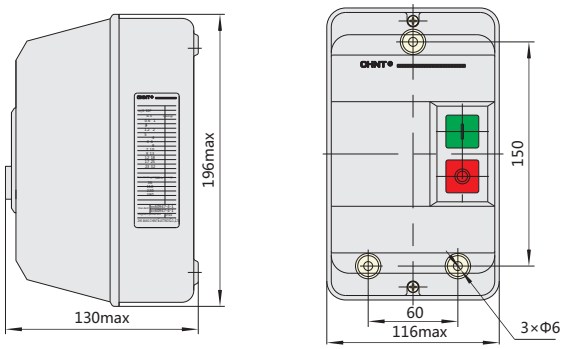

«Электро-Профи» - www.ep.ru

5. Wiring Diagram

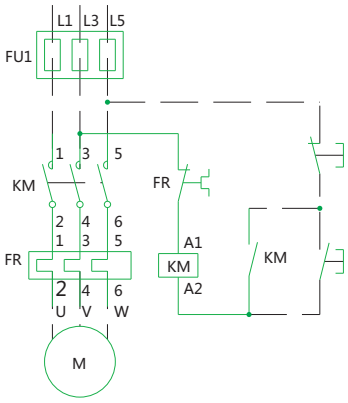

Control supply voltage is as the same as the main circuit voltage (three-phrase)

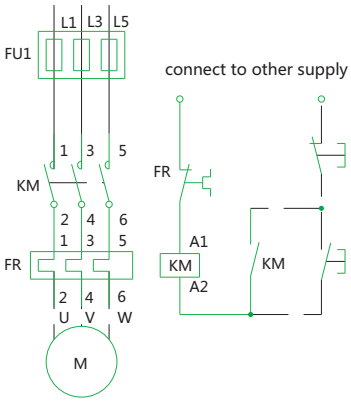

Control supply voltage is not as the same as the main circuit voltage (three-phrase)

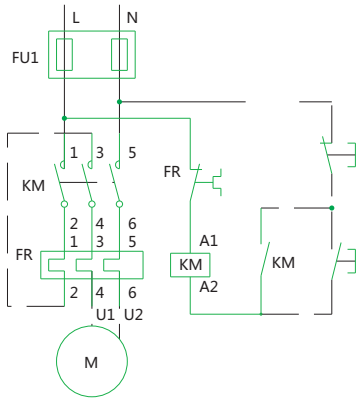

Control supply voltage is as the same as the main circuit voltage (single-phrase)

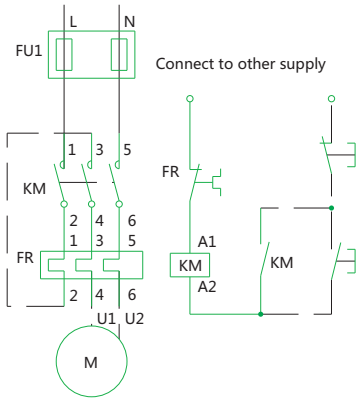

Control supply voltage is not as the same as the main circuit voltage (single-phrase)

D

«Электро-Профи» - www.ep.ru

6. Picture

NQ3-5.5P



NQ3-11P



«Электро-Профи» - www.ep.ru



NQB1 Series Protection Starter

1. Application scope

NQB1 series protection starter (starter for short hereinafter) applies mainly to the power system with AC current of 50Hz, rated operational voltage of 690V and rated operational current up to 18A for the direct start, running and breaking of the three-phase squirrel cage induction motor, with the functions of frequent switching and breaking circuit, and short circuit protection, overload, phase failure, temperature compensation and other line protection. NQB1 series starter breaks the traditional decentralized model of components of low-voltage products and integrates all functions, with the internal system coordinating by itself. The compact structure not only saves space and is suitable for the new busbar wiring system, but also reduces inventory, makes it easy for users to select models and decreases the workload and improper model selection. Thus, it is with strong economy and practicability.

The starter conforms to standards GB 14048.4 and IEC 60947-4-1.

2. Model and meanings

N QB 1 - 18/ □□

- Accessory code:
  J0 - economical without base;
  J1 - economical with base; B0 - standard
- Frame Level rated current
- Design sequence No.
- Protection Starter
- Characteristic code of the enterprise

D

«Электро-Профи» - www.ep.ru

3. Normal operating conditions and mounting conditions

3.1 Normal operating conditions

a) Frequency: AC frequency of the power supply of 50Hz;

b) Ambient temperature: -5 ℃ ~ +40 ℃, average temperature in 24 hours not exceed +35 ℃;

c) Altitude: not exceed 2000m;

d) Humidity: The relative humidity not exceed 50% at the maximum temperature of +40 ℃, and the relative humidity not more than 90% at room temperature (at 25℃ + 5 ℃);

e) Pollution grade: Grade Ⅲ.

3.2 Mounting conditions

3.2.1 Mounting methods

a)Use rail for mounting: 35mm standard mounting rail, with the input terminal of the product up;

b)The inclination between the mounting plane and the vertical plane shall not exceed ±5 °.

3.2.2 Mounting overvoltage category Mounting overvoltage category: Ⅱ,Ⅲ.

3.2.3 Impact and vibration

The product shall be installed and operated at a place without obvious shake, impact and vibration.

4. Main parameters and technical performance

4.1 See the main parameters and technical performance indicators in the table below:

Table 1 Main Parameters and Technical Performance Indicators

Model	Rated insulation voltage (Ui V)	Rated frequency Hz	Rated operational current Ie A	Range of setting current of thermal overload releaser A	Conventional heating current Ith A	Current setting value of instantaneous releaser Ir A	Rated operational voltage Ue V	Rated limited short circuit current Iq kA	Expected current r kA	Matched type r kA	Power of controlled three-phase squirrel cage motor kW	Arcing distance mm
NQB1-18	690	50	0.16	0.1-0.16	0.16	1.5	380(400)	50	1	2	-	40
							660(690)				-	
			0.25	0.16-0.25	0.25	2.4	380(400)				-	
							660(690)				-	
			0.4	0.25-0.4	0.4	5	380(400)				-	
							660(690)				-	
			0.63	0.4-0.63	0.63	8	380(400)				-	
							660(690)				0.37	
			1	0.63-1	1	13	380(400)				-	
							660(690)				0.55	
			1.6	1-1.6	1.6	22.5	380(400)	50		1	-	
							660(690)	2.25			1.1	
			2.5	1.6-2.5	2.5	33.5	380(400)	50			0.75	
							660(690)	2.25			1.5	
			4	2.5-4	4	51	380(400)	50			1.5	
							660(690)	2.25			3	
			6.3	4-6.3	6.3	78	380(400)	50		1	2.2	
							660(690)	2.25			4	
			10	6-10	10	138	380(400)	50			4	
							660(690)	2.25			5.5	
			14	9-14	14	170	380(400)	7.5			5.5	
							660(690)	2.25			9	
			18	13-18	18	223	380(400)	7.5	3		7.5	

4.2 Coil voltage Us(~)(V):110, 220, 380, 50Hz.

«Электро-Профи» - www.ep.ru

5 Structural characteristics

The starter is a compact product mainly made up of the mass-produced single electrical component AC contactor NC1 and motor starter NS2 plus the intermediate connection module and optional base through performance coordination and matching.

Main characteristics: Control and protection of system coordination, ensuring the safety of electrical equipment compared with the traditional system; Reducing the wiring workload, required mounting time and mounting area; Standard components can meet requirements of most applications and reduce inventory; applicable to new mounting applications and busbar wiring system;

Facilitating users' model selection and reducing the workload and improper model selection; thereby being novel, economical and practical.

6 Wiring diagram of starter application circuit (see Figure 1)

Figure 1

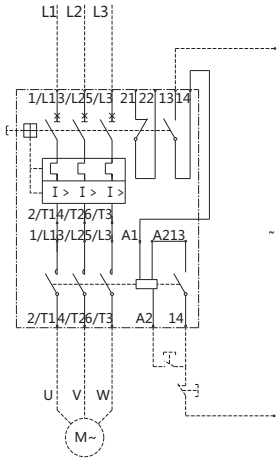

7 Overall and mounting dimension

NQB1-18/JO economical without base



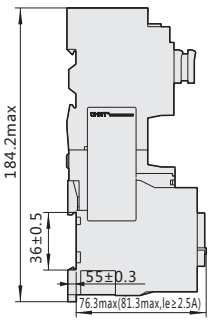



«Электро-Профи» - www.ep.ru

NQB1-18/J1 economical with base



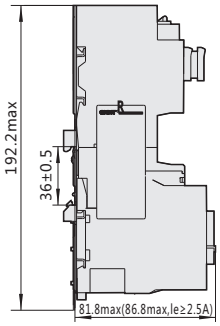

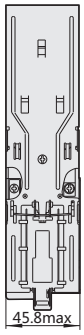

NQB1-18/BO standard



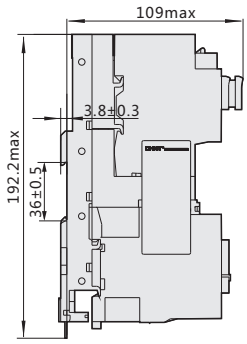

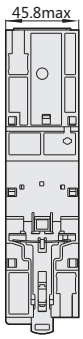

8 Ordering instructions

8.1 Before placing an order, the main parameters and technical performance indicators can be used as a reference.

8.2 When placing an order, the following must be described:

a) Protector's model, specifications, rated operational current and coil control voltage

b) Order quantity

8.3 Starters needing special uses, starters with technical conditions negotiated by the supplier and demander and starters exceeding the normal operating range specified in this technical specification shall be regarded as special orders.

«Электро-Профи» - www.ep.ru



NKB1
Control & Protective Switching Device

1. General

NKB1 series control & protective switching device (CPS) is mainly applied to circuit with AC current frequency of 50 Hz or 60Hz, rated operational voltage up to 690V and rated operational current from 1A to 125A used for it is making, carrying and breaking currents under normal conditions, including specified overload conditions and for making, carrying for a specified time and breaking currents under specified abnormal conditions such as those of short-circuits.

NBK1 series CPS is applied to power distribution and motor protection & control of various occasions or systems, e.g. infrastructure, buildings, communications, etc.

Standard: IEC60947-6-2 Multiple function equipment-Control and protective switching devices (or equipment) (CPS).
Symbol: 

2. Features

NKB1 series CPS adopts the integrated modular structure, integrating the main functions of circuit breaker, contactor, over load relay, starter, disconnector, and so on.

With small volume and high reliability, it consists of the advantages of high short current breaking capacity and short flashover distance. It can provide inverse time delay protection, short circuit short time delay protection, instantaneous short circuit protection, and fast short circuit protection. Once function selected according to requirements, it can provide protection for various motor starting, control circuits and distribution circuits with accurate and reliable performance.

NKB1 series product consists of enclosure, electromagnetic transmission mechanism, operation mechanism, main circuit contacts sets, intelligent trip unit and auxiliary contacts, and can control the making and breaking of the circuit locally or remotely.

The CPS has a variety of circuit protection functions: start delay, phase failure, three phases unbalance, under current, over voltage, under voltage, etc.

The CPS has different types for choice: basic type, fire-fighting type, leakage type, communication type. The whole series products have isolation function.

The CPS has the one key recovery function and self-setting function, to meet the different needs of the users.

The CPS has two control modes: remote automatic control & local manual control. It has panel indication & electromechanical signal alarm function.

3. Operating conditions

Ambient temperature: -5℃~+40℃, average day temperature value ≤ +35℃. It can operate reliably at -25℃~+70℃ for a short period.
Altitude: ≤2000m,derating by 10% every 1000m when higher than 2000m.
Humidity: When ambient air temperature is +40℃, the relative humidity ≤ 50% ; Higher relative humidity is allowed at lower temperatures.
The average maximum relative humidity of the month is 90% when the minimum monthly average temperature is + 25 ℃, and the condensation occurring on the surface of the product due to temperature variation is taken into account.
Pollution degree: 3
Installation category: Ⅲ
Installation site requirement: The external magnetic field of the installation site shall not exceed 5 times of the geomagnetism in any direction. No explosive gas, no corrosive gas; no rain or snow invasion; dry and ventilated.

«Электро-Профи» - www.ep.ru

4. Type & designation

N KB 1 - □□/□□/□□□

- Additional function code: Basic type: blank; Fire-fighting type: F; Leakage type: L; Communication type: T; Isolation type: G
- Control supply voltage code: M-230V, Q-400V
- Auxiliary contacts set code: 06-3NO 2NC+1 fault release+1 fault alarm
- Rated operational current Ie(A): 1、3、6、12、16、25、32、45、63、80、100、125
- Load type code: M-motor protection, L- distribution protection
- Breaking capacity code: C-15kA, Y-35kA
- Frame size (A): 45, 125
- Serial number
- Control & Protective Switching Device (CPS)
- Enterprise code

5. Technical parameter

Table 1 Main circuit technical parameter

Type	NKB1-45								NKB1-125			
Rated operational voltage Ue(V)	400,690/50Hz											
Rated insulation voltage Ui(V)	690								800			
Rated impulse withstand voltage Uimp(kV)	4								6			
Conventional free air thermal current Ith(A)	16					45			80		125	
Rated operational current Ie(A)	1	3	6	12	16	25	32	45	63	80	100	125
Utilization categories	AC-43,AC-44											
Number of poles	3P											

Table 2 Setting current of the controller

Frame size	Rated operational current Ie (A)	Controller rated current Iet (A)	Overload setting current range Ir1 (A)	Controllable motor power Pe (kW) (400V)
45	1	1	0.4~1	0.12~0.3
	3	3	1.2~3	0.37~1.2
	6	6	2.4~6	1.0~2.7
	12	12	4.8~12	2.2~5.5
	16	16	6.4~16	3.0~7.5
	25	25	10~25	5.0~12
	32	32	12.8~32	6.5~15
	45	45	18~45	9.0~22
125	63	63	25~63	12~30
	80	80	32~80	15~37
	100	100	40~100	22~45
	125	125	50~125	27~55

Table 3 Operating conditions for controlling electromagnet

Rated control supply voltage	Conventional operation	Operation voltage range
M : AC230V	CPS reliable close	(85%~110%)Us
Q : AC400V	CPS open or trip	(20%~75%)Us

Table 4 Electrical life

Type		NKB1-45	NKB1-125
Electrical life (10^4)	AC-43	120	100
	AC-44	3	2
Mechanical life (10^4)		1000	500
Duties: Intermittent duty		300 Loading factor 40%	120 Loading factor 25%

«Электро-Профи» - www.ep.ru

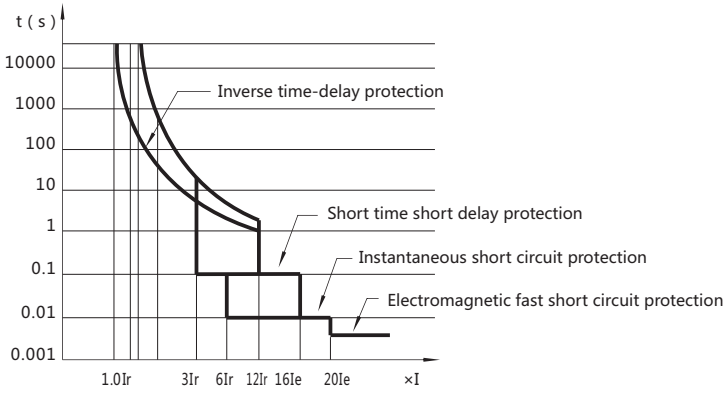

Figure 1 NKB1 time-current characteristics

6. Controller technical parameter

Function		Parameter setting	Delay setting	Factory defaults	Setting parameters	Fault status output	
						Basic type	Fire-fighting type
Overload protection		(0.4～1)Ie	Protection curve	F1	(0.4～1)Ie	Delay tripping	Delay alarm
Short circuit short time delay protection		(3～12)Ir+OFF	0.1～0.4s	8Ir/0.2s	(3～12)Ir+OFF	Delay tripping	Delay alarm
Instantaneous short circuit protection		(6～16)Ie	<50ms	14Ie	(8～16)Ie	Instantaneous tripping	Tripping + alarm
Phase unbalance（phase failure, phase lose）protection		(20%～80%)+OFF	1～40s	30%/10s	(20%～80%)+OFF	Delay tripping	Delay alarm (tripping)
Under-current protection		(0～0.8)Ir+OFF	1～60s	OFF	(0～0.8)Ir+OFF	Delay tripping	Delay alarm (tripping)
Under-voltage protection	Us230V	(154V～198V)+OFF	1～30s	176V/10s	(154V～198V)+OFF	Delay tripping	Delay alarm (tripping)
	Us400V	(266V～342V)+OFF	1～30s	304V/10s	(266V～342V)+OFF		
Over-voltage protection	Us230V	(230V～286V)+OFF	1～30s	264V/10s	(230V～286V)+OFF	Delay tripping	Delay alarm
	Us400V	(400V～494V)+OFF	1～30s	456V/10s	(400V～494V)+OFF		
Start delay protection		(0～99s)+OFF	0～99s	3s	(0～99s)+OFF	During the start delay, shield certain protection function, e.g. instantaneous short circuit tripping.	
Locked rotor protection		(5～9)Ir+OFF	0～50s	OFF	Hidden menu	Delay tripping	Delay alarm (tripping)
Residual current protection		(30～500mA)+OFF	0.1～1s	100mA	(30～500mA)+OFF	Tripping	Alarm

Notes:Communication and leakage protection are optional function; communication type product adopts RS485 , RJ45 interface, Modbus protocol.
Overload protection setting curve （1.5Ir1 operation times）:F0（overload protection close） , F1(51), F2(98) , F3(144) , F4(200)
The power signal of under/over voltage protection of the controller is taken from the control terminal Us(A1--A2).

6.1 Controller menu

Controller menu grading: open setup menu, hide setup menu, calibration menu;
Open the setup menu: the user can set functional parameters as required;
One key recovery operation: perform a one key recovery operation when parameter setting problem occurs, and the controller will restore the factory settings (factory defaults);
Self-setting operation: when the load operation is stable, perform this self-setting operation, the controller will set the setting current according to the circuit parameters automatically.

6.2 Controller display

When NKB1 is connected to the working power supply, the LED displays the voltage value, and this can be used as a voltmeter, with the last three figures display the voltage value;
NBK1 can be used as an ammeter at runtime, and circularly displays three phase alternating current running condition;
Troubleshooting: no-load runs NKB1, and press “data” key to view the last fault type.

«Электро-Профи» - www.ep.ru

7. Operating instruction (handle)

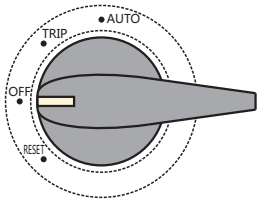

Connect AUTO: (automatic control position) the CPS controls the connection of the electromagnet coil, and realizes remote automatic control by making & breaking the control power supply.
Trip: when there's fault tripping, the mechanism of the switch trips, the main contacts open, and the electromagnet coil circuit is disconnected.
OFF: manual operation, the electromagnet coil circuit is disconnected, the main contacts of the switch remains in the open position.
RESET: turn the operation knob, to reset and switch on the tripped switch mechanism.
Isolation status: When the switch is in the OFF position, pull out the isolation strip and lock it, the switch will be on the disconnected isolation status, and the handle is not operational.
Notes: The isolation type CPS has isolation handle and isolation strip.

8. Installation

NKB1 Installation dimensions

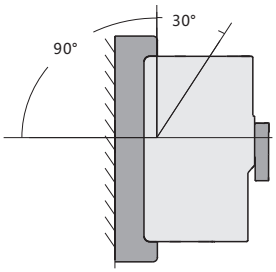

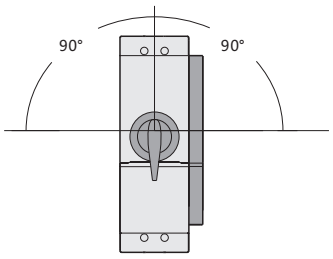

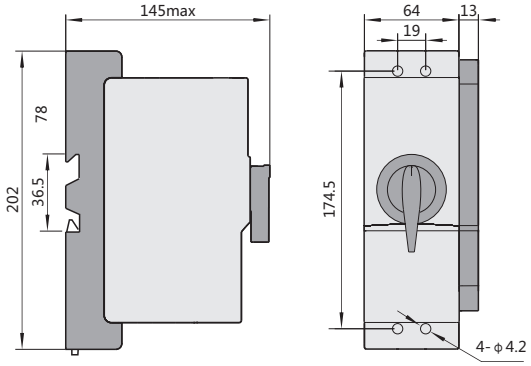

NKB1-45 Control & protective switching device

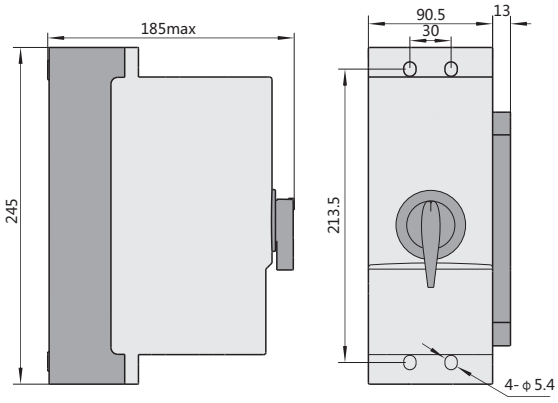

NKB1-125 Control & protective switching device

«Электро-Профи» - www.ep.ru

9. Basic electric control chart

9.1 Manual panel + local control

Secondary power supply	Power supply protection	Power supply signal	Local manual control		Auxiliary signal			Fault signal	
			Start	Stop	Self-lock	Run	Stop	Stop	Alarm

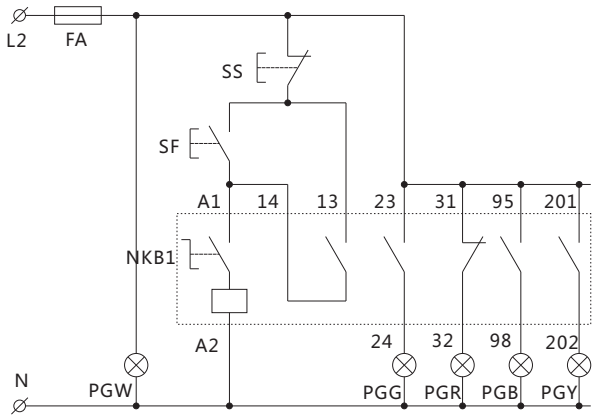

NKB1 Auxiliary contacts instruction (06 auxiliary)

	NO	NC	NC	NO	NC	a	b
Auxiliaries	13 / 14	23 / 24	31 / 32	41 / 44	41 / 42	95 / 98	201 / 202
	AC-15 Ie:5A Ue:400V				AC-15 Ie:3A Ue:230V		

Notes: auxiliary a(95/98): fault tripping signal port;
Auxiliary b (201/202): fire-fighting type fault talarmng signal port.

9.2 Manual panel + local control+ remote control

Secondary power supply	Power supply protection	Power supply signal	Local & remote manual control	Auxiliary signal			Fault signal		External signal		Signal
				Self-lock	Run	Stop	Stop	Alarm	Stop	Run	Power supply

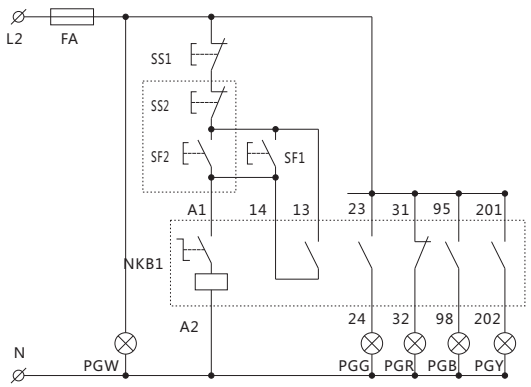

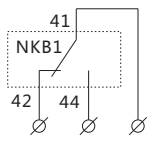

To the control panel

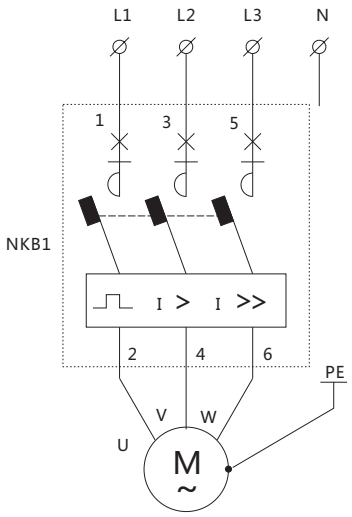

Notes: This diagram is applicable to all kinds of motor when single equipment is in normal operation and adopts simultaneous local and remote control.

«Электро-Профи» - www.ep.ru

10. Attention

10.1 Before installing the CPS, make sure that the operation knob can work normally and is on the OFF position; "AUTO" indicates the connection status of the main circuit,; "TRIP" indicates the free tripping position that caused by circuit fault, and the circuit fault must be removed by the responsible person before one operates the switch; "OFF" indicates the main circuit open position; the free tripped switch can only be reset and switched on by turning the operation knob to "RESET".

10.2 Before installing the switch, make sure that the power supply of the coil and auxiliaries comply with the product instruction as well as with the actual control circuit.

10.3 Energizing (85%～110%)Us to the coil, the electromagnet closes reliably when the knob is on "AUTO" position, and the electromagnet releases reliably when the knob is on "OFF" position. The current setting has been set up before leaving the factory, and users can adjust it according to actual needs.

10.4 NKB1 can continue to run after breaking short circuit current, but it need checking and confirmation of its operation status before continue operation.

10.5 In high power motor controlling application (above 11kW), when choosing the starting mode, the user shall take starting torque, current multiple, voltage drop, circuit capacity into consideration. According to general requirements, to start normally with proper load and satisfy the reliable operation of NKB1 electromagnet, the voltage reduction limit shall not exceed 80% of the rated value, and the starting current multiple shall not exceed(4～5) times.

10.6 The exposed part of the external connecting wire of the incoming and outgoing terminal of the switch shall be wrapped with insulator.

10.7 In the process of transportation and storage, the products shall be protected from rain and snow. The storage environment shall meet the following conditions: daily average temperature shall be +25℃, relative humidity shall be less than 90%, the environment temperature shall be no higher than +40℃ and no less than -5℃.

11. Ordering instructions

During product selection, the user shall specify the following contents, if necessary, application conditions or requirements shall be further specified:
Product name & type;
Rated current of the switch, intelligent controller type & rated current;
Control power supply voltage of the electromagnet coil;
Additional functions required.

«Электро-Профи» - www.ep.ru



NTB1
Circuit-breaker for Equipment

1.General

1.1 Certificates: CE, UL, CSA;

1.2 Electric ratings: AC 50/60Hz, AC250V, DC32V, 3A;

1.3 Standard: IEC/EN 60934, UL1077 and CSA C22.2 No.235.

2. Type designation

N TB 1 — 03 □

- Terminal configuration (S: Straight Tab; Default: Normal Tab)
- Frame degree rated currnet
- Designsequence No.
- Circuit-breaker for equipment
- Corporationcode name

3. Features

3.1 1-phase bimetal

3.2 Terminal configuration (S: Straight Tab; Default: Normal Tab)

3.3 Use embedded or panel installation

3.4 Inserting or welding connection

3.5 Tripping current code: "TC1"

3.6 Protectors type: "OC".

«Электро-Профи» - www.ep.ru

4. Technical date

4.1 Protection properties

Series No.	I/In	Operating time Tp	Test condition	Expected results
1	1.0 Ie	> 1h	Start from cold status	No trip
2	1.35 Ie	≤1h	Start from heat status, night after item No.1	trip
3	2.0 Ie	2.2s≤t≤15s	Start from cold status	trip
4	4.0 Ie	0.55s≤t≤1.8s	Start from cold status	trip
5	6.0 Ie	0.27s≤t≤0.7s	Start from cold status	trip
6	8.0 Ie	0.17s≤t≤0.45s	Start from cold status	trip
7	10.0 Ie	0.12s≤t≤0.3s	Start from cold status	trip

4.2 The time-current characteristic curve

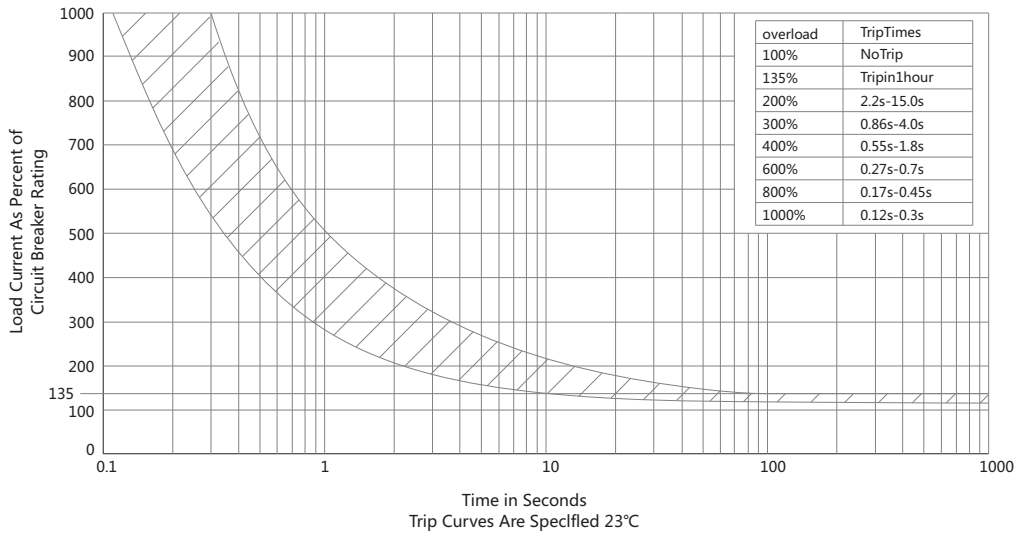

4.3 Deatting factor table

Amblent Temperature ℃	-40	-30	-10	-5	0	10	15	25	30	40	50	60
Multlpllcation factor	1.26	1.22	1.14	1.12	1.1	1.06	1.04	1.0	0.98	0.94	0.9	0.86

4.4 Main technical parameters

Model	Type	UG	FW	Ue V	Ie A	Hz	TC	OL	SC
NTB1	OC	A,B,C,D	0	125 Ac	3	50/60	1	1	1kA , U1
			0	250 Ac					
			0	32 Dc					

«Электро-Профи» - www.ep.ru

5. Overall and mounting dimensions (mm)

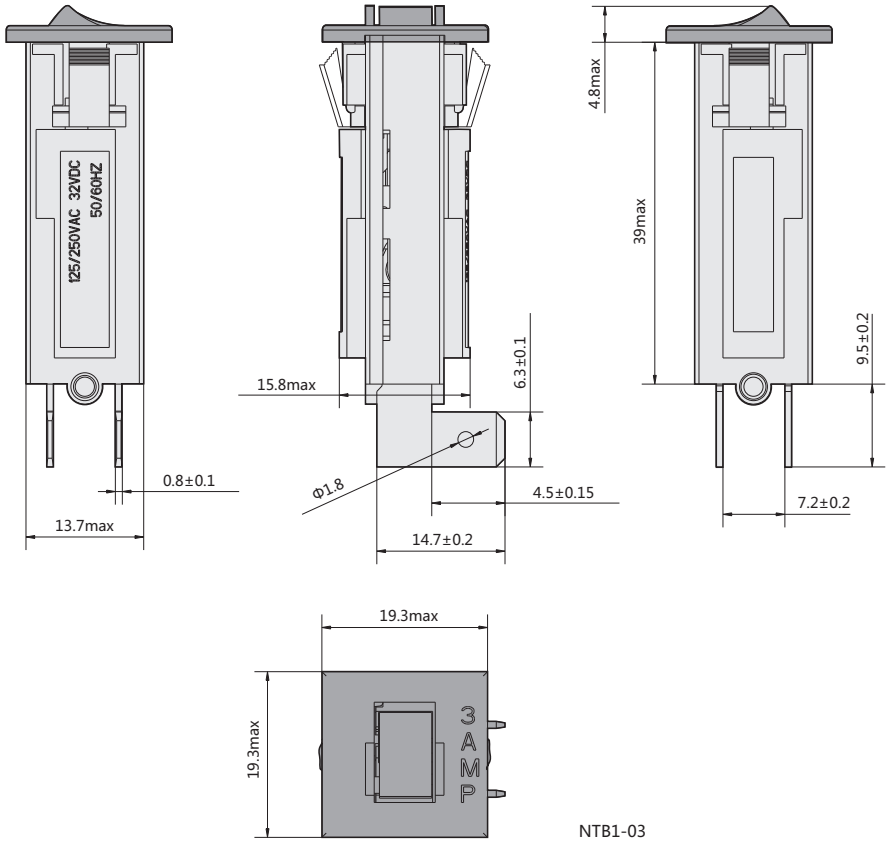

NTB1-03

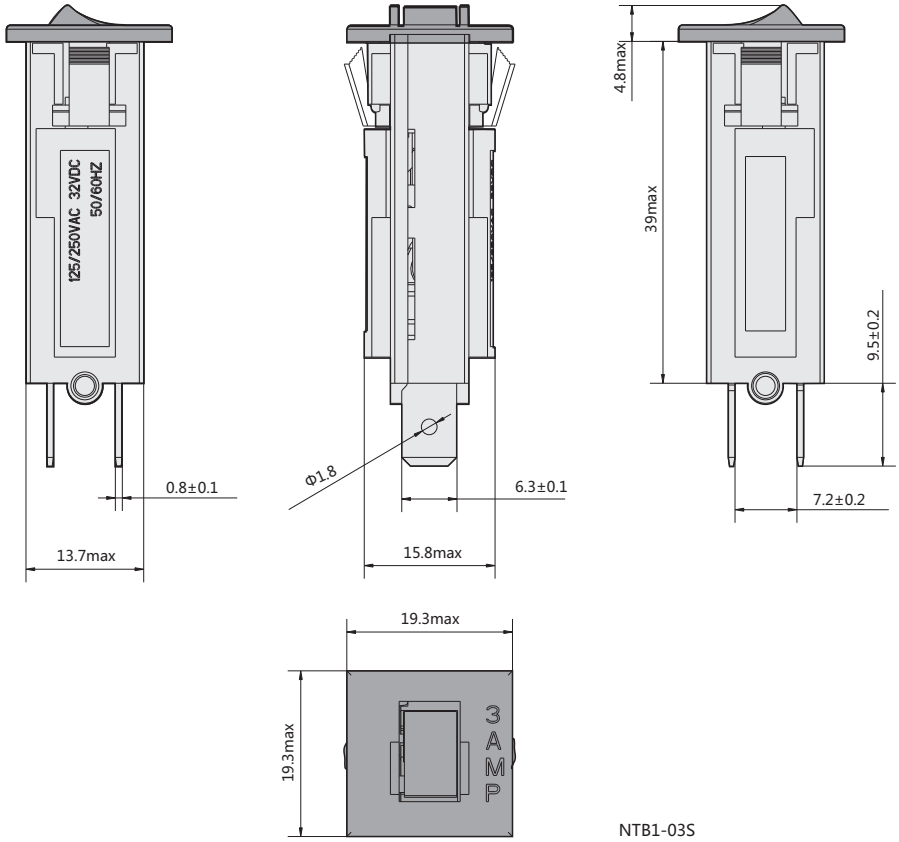

NTB1-03S

«Электро-Профи» - www.ep.ru

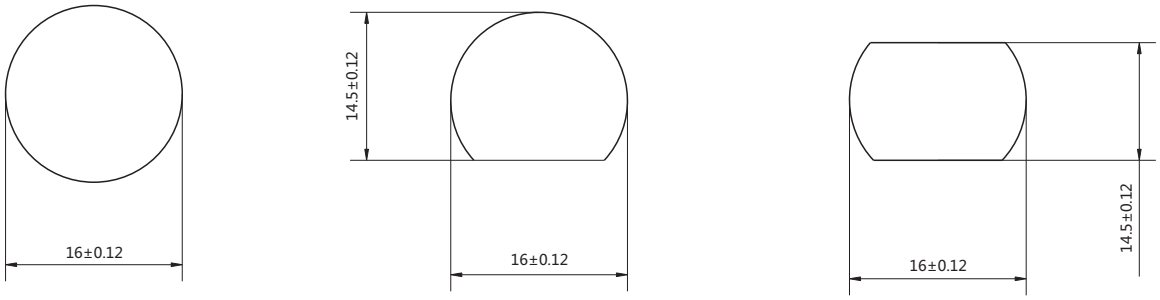

6. Use

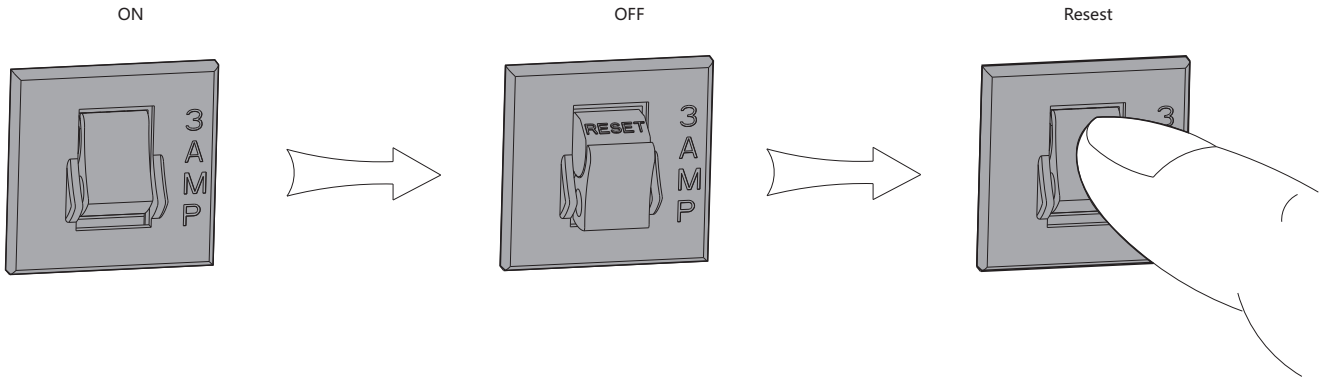

«Электро-Профи» - www.ep.ru

Note

«Электро-Профи» - www.ep.ru

Control and Sign

diversity for applications



«Электро-Профи» - www.ep.ru

al



«Электро-Профи» - www.ep.ru

CHINT ELECTRIC

Pushbuttons & Indicator Lights & Buzzers

Pushbuttons



NP8

Page P-001



NP2

Page P-013



NP6

Page P-031



NP3

Page P-037



NPH1

Page P-042

Indicator Lights / Buzzers



ND16

Page P-045

«Электро-Профи» - www.ep.ru

Drill Plan	Picture Index	Certificates	IP	Product Model
Φ22.3mm		CE KEMA EUR EAC cULus	IP40	NP2 Series
				
		CE		
		CE Intertek EAC	IP65	NP8 Series
		CE Intertek EAC		NPH1 Pushbutton Box
Φ16mm		CE	IP40	NP6 Series
Φ22.3mm		CE cULus EAC cULus LISTED	IP40 IP65	ND16 Series
		CE EAC	IP20	ND16 Buzzer
		CE EAC	IP65	NP3 Series Pendant Station

Selector Switches	2 positions			Key-operated selector Switches	2 positions	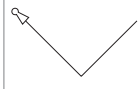	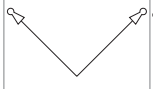	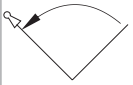	
		Maintained	Momentary			Maintained	Maintained	Momentary	
	3 positions	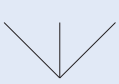			3 positions	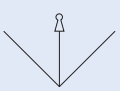	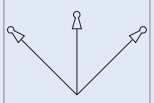	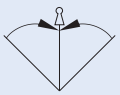	Key Free
		Maintained	Momentary			Maintained	Maintained	Momentary	

«Электро-Профи» - www.ep.ru

Colors	○	●	●	●	●	●	●
	1	2	3	4	5	6	7
	White	Black	Green	Red	Yellow	Blue	Orange



Flushbutton
NP8-□□BN/□□

E-003



Projecting button
NP8-□□GN/□□

E-004



Mushroom button, self-reset
NP8-□□M/□□

E-005



Mushroom button, self-locking, rotate to reset
NP8-□□ZS/□□

E-007



Illuminated mushroom button, self-reset
NP8-□□MD/□□

E-006



Illuminated double-head button
NP8-□□SD

E-008



Selector switch
NP8-□□×/□□

E-009



Illuminated Selector switch
NP8-□□×D/□

E-010



Key switch
NP8-□ Y/□□

E-011



Double-head button
NP8-□□S

E-008



Illuminated flush button
NP8-□BND/□□

E-003



Illuminated projecting button
NP8-□□GND/□□

E-004



Indicator light
NP8-D/□

E-009

«Электро-Профи» - www.ep.ru



NP8 22mm Pushbutton Compound Models

1. General

Electric ratings: AC50/60Hz, AC415V/DC250V;
Degree of protection: IP65
Standard: IEC/EN60947-5-1

2. Operating conditions

2.1 Ambient temperature is -5℃~+40℃, the average temperature during 24 hours couldn't exceed +35℃.

2.2 Altitude: ≤2000m.

2.3 Atmosphere condition: Relative humidity of the atmosphere couldn't exceed 50% when the highest temperature is +40℃; much higher relative humidity is allowable under the condition of lower temperature, for example, when the temperature reaches +20℃, the relatice humidity is up to 90%. As for dews, which contingently appear due to change of temperature, special steeps should be taken.

2.4 Pollution grade: 3

2.5 Installation category: Ⅱ

2.6 Tightening torque is 0.8~1.2N·m for the cable terminals. Cross section of the cable connection is 0.5~2.5mm^2, and 8mm conductor length is needed.

3. Technical data

3.1 Refer to table below for rated values related to utilization category.

AC-15	Rated operational voltage, V	415	240	120
	Rated operational current, A	1.9	3	6
DC-13	Rated operational voltage, V	250	125	-
	Rated operational current, A	0.27	0.55	-

3.2 Refer to table 3 for basic parameters of illuminated pushbutton.

Basic parameters	LED lamp
Rated operational current	≤20mA
Rated operational voltage	AC/DC 6V, 12V, 24V, 36V, AC110V~230V

3.3 Durability
Mechanical life:
Flush, mushroom-headed and illuminated version:
3×10^6 operation circles.
Rotary, double-headed, self-locking and keyed version:
1×10^5 operation circles.
Electric life:
Flush, mushroom-headed and illuminated version:
AC 1×10^6 / DC 2.5×10^5 operation circles.
Rotary, double-headed, self-locking and key type button:
1×10^5 operation circles.

3.4 Short-circuit protective device: NT00-16 16A

4. Features

4.1 Operating mechanism features bright colors and streamline surface.

4.2 Modular design.
Operating system, adapter, contact system and illuminating system can be freely combined to realize different functions.

4.3 Convenient for mounting and dismounting thanks to snap-on structure.

4.4 Automatic locking function of the central adaptor makes it convenient and reliable for mounting and connection.

4.5 The terminal screw is available with anti-loosing mechanism to protect it against loosening from the body during transportation.

4.6 LED lamp with high brightness and long service life ensures reliable indication.

«Электро-Профи» - www.ep.ru

5. NP8 pushbutton

★ Momentary Flush Pushbutton-(Non illuminated)

NP8-□□ BN/ □□	Model	Color		
	NP8-10BN/1	○	1	—
	NP8-10BN/2	●	1	—
	NP8-10BN/3	●	1	—
	NP8-10BN/4	●	1	—
	NP8-10BN/5	●	1	—
	NP8-10BN/6	●	1	—
	NP8-01BN/1	○	—	1
	NP8-01BN/2	●	—	1
	NP8-01BN/3	●	—	1
	NP8-01BN/4	●	—	1
	NP8-01BN/5	●	—	1
	NP8-01BN/6	●	—	1
	NP8-20BN/1	○	2	—
	NP8-20BN/2	●	2	—
	NP8-20BN/3	●	2	—
	NP8-20BN/4	●	2	—
	NP8-20BN/5	●	2	—
	NP8-20BN/6	●	2	—
	NP8-02BN/1	○	—	2
	NP8-02BN/2	●	—	2
	NP8-02BN/3	●	—	2
	NP8-02BN/4	●	—	2
	NP8-02BN/5	●	—	2
	NP8-02BN/6	●	—	2
	NP8-11BN/1	○	1	1
	NP8-11BN/2	●	1	1
	NP8-11BN/3	●	1	1
	NP8-11BN/4	●	1	1
	NP8-11BN/5	●	1	1
	NP8-11BN/6	●	1	1

★ Momentary Flush Pushbutton-illuminated
AC/DC6V, 12V, 24V, 36V, AC110V~230V

NP8-□□ BND/ □□	Model	Color		
	NP8-10BND/1	○	1	—
	NP8-10BND/3	●	1	—
	NP8-10BND/4	●	1	—
	NP8-10BND/5	●	1	—
	NP8-10BND/6	●	1	—
	NP8-01BND/1	○	—	1
	NP8-01BND/3	●	—	1
	NP8-01BND/4	●	—	1
	NP8-01BND/5	●	—	1
	NP8-01BND/6	●	—	1

Dimension (mm)

NP8-□□BND/□

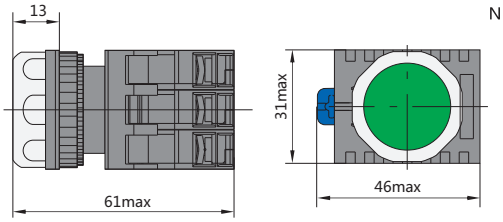

NP8-□□ BN/ □□	Model	Color		
	NP8-30BN/1	○	3	—
	NP8-30BN/2	●	3	—
	NP8-30BN/3	●	3	—
	NP8-30BN/4	●	3	—
	NP8-30BN/5	●	3	—
	NP8-30BN/6	●	3	—
	NP8-03BN/1	○	—	3
	NP8-03BN/2	●	—	3
	NP8-03BN/3	●	—	3
	NP8-03BN/4	●	—	3
	NP8-03BN/5	●	—	3
	NP8-03BN/6	●	—	3
	NP8-12BN/1	○	1	2
	NP8-12BN/2	●	1	2
	NP8-12BN/3	●	1	2
	NP8-12BN/4	●	1	2
	NP8-12BN/5	●	1	2
	NP8-12BN/6	●	1	2
	NP8-21BN/1	○	2	1
	NP8-21BN/2	●	2	1
	NP8-21BN/3	●	2	1
	NP8-21BN/4	●	2	1
	NP8-21BN/5	●	2	1
	NP8-21BN/6	●	2	1

Dimension (mm)

NP8-□□BN/□

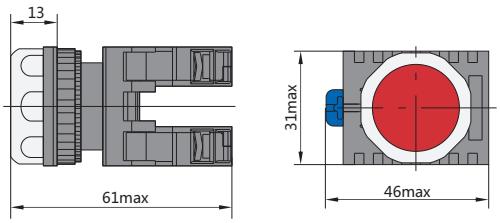

NP8-□□ BND/ □□	Model	Color		
	NP8-20BND/1	○	2	—
	NP8-20BND/3	●	2	—
	NP8-20BND/4	●	2	—
	NP8-20BND/5	●	2	—
	NP8-20BND/6	●	2	—
	NP8-02BND/1	○	—	2
	NP8-02BND/3	●	—	2
	NP8-02BND/4	●	—	2
	NP8-02BND/5	●	—	2
	NP8-02BND/6	●	—	2
	NP8-11BND/1	○	1	1
	NP8-11BND/3	●	1	1
	NP8-11BND/4	●	1	1
	NP8-11BND/5	●	1	1
	NP8-11BND/6	●	1	1

«Электро-Профи» - www.ep.ru

★ Momentary Projecting Pushbutton-(Non illuminated)

NP8-□□ GN/ □□	Model	Color	1	2
	NP8-10GN/1	○	1	—
	NP8-10GN/2	●	1	—
	NP8-10GN/3	●	1	—
	NP8-10GN/4	●	1	—
	NP8-10GN/5	●	1	—
	NP8-10GN/6	●	1	—
	NP8-01GN/1	○	—	1
	NP8-01GN/2	●	—	1
	NP8-01GN/3	●	—	1
	NP8-01GN/4	●	—	1
	NP8-01GN/5	●	—	1
	NP8-01GN/6	●	—	1
	NP8-20GN/1	○	2	—
	NP8-20GN/2	●	2	—
	NP8-20GN/3	●	2	—
	NP8-20GN/4	●	2	—
	NP8-20GN/5	●	2	—
	NP8-20GN/6	●	2	—
	NP8-02GN/1	○	—	2
	NP8-02GN/2	●	—	2
	NP8-02GN/3	●	—	2
	NP8-02GN/4	●	—	2
	NP8-02GN/5	●	—	2
	NP8-02GN/6	●	—	2
	NP8-11GN/1	○	1	1
	NP8-11GN/2	●	1	1
	NP8-11GN/3	●	1	1
	NP8-11GN/4	●	1	1
	NP8-11GN/5	●	1	1
	NP8-11GN/6	●	1	1

NP8-□□ GN/ □□	Model	Color	1	2
	NP8-30GN/1	○	3	—
	NP8-30GN/2	●	3	—
	NP8-30GN/3	●	3	—
	NP8-30GN/4	●	3	—
	NP8-30GN/5	●	3	—
	NP8-30GN/6	●	3	—
	NP8-03GN/1	○	—	3
	NP8-03GN/2	●	—	3
	NP8-03GN/3	●	—	3
	NP8-30GN/4	●	3	—
	NP8-30GN/5	●	3	—
	NP8-30GN/6	●	3	—
	NP8-03GN/1	○	—	3
	NP8-03GN/2	●	—	3
	NP8-03GN/3	●	—	3
	NP8-03GN/4	●	—	3
	NP8-03GN/5	●	—	3
	NP8-03GN/6	●	—	3
	NP8-12GN/1	○	1	2
	NP8-12GN/2	●	1	2
	NP8-12GN/3	●	1	2
	NP8-12GN/4	●	1	2
	NP8-12GN/5	●	1	2
	NP8-12GN/6	●	1	2
	NP8-21GN/1	○	2	1
	NP8-21GN/2	●	2	1
	NP8-21GN/3	●	2	1
	NP8-21GN/4	●	2	1
	NP8-21GN/5	●	2	1
	NP8-21GN/6	●	2	1

★ Momentary Projecting Pushbutton-illuminated
AC/DC6V, 12V, 24V, 36V, AC110V~230V

NP8-□□ GND/ □□	Model	Color	1	2
	NP8-10GND/1	○	1	—
	NP8-10GND/3	●	1	—
	NP8-10GND/4	●	1	—
	NP8-10GND/5	●	1	—
	NP8-10GND/6	●	1	—
	NP8-01GND/1	○	—	1
	NP8-01GND/3	●	—	1
	NP8-01GND/4	●	—	1
	NP8-01GND/5	●	—	1
	NP8-01GND/6	●	—	1

Dimension (mm)

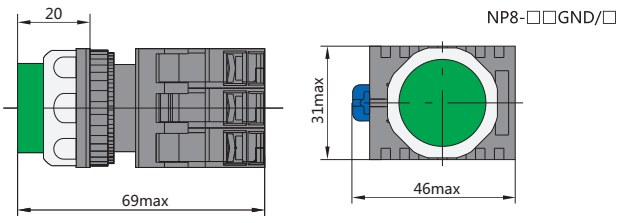

Dimension (mm)

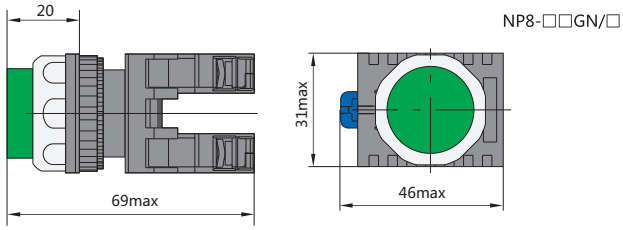

NP8-□□ GND/ □□	Model	Color	1	2
	NP8-20GND/1	○	2	—
	NP8-20GND/3	●	2	—
	NP8-20GND/4	●	2	—
	NP8-20GND/5	●	2	—
	NP8-20GND/6	●	2	—
	NP8-02GND/1	○	—	2
	NP8-02GND/3	●	—	2
	NP8-02GND/4	●	—	2
	NP8-02GND/5	●	—	2
	NP8-02GND/6	●	—	2
	NP8-11GND/1	○	1	1
	NP8-11GND/3	●	1	1
	NP8-11GND/4	●	1	1
	NP8-11GND/5	●	1	1
	NP8-11GND/6	●	1	1

E

«Электро-Профи» - www.ep.ru

★ Φ40 Momentary Mushroom Pushbutton-(Non illuminated)

NP8-□□ M/ □□	Model	Color	⌇	⌇
	NP8-10M/11	○	1	—
	NP8-10M/12	●	1	—
	NP8-10M/13	●	1	—
	NP8-10M/14	●	1	—
	NP8-10M/15	●	1	—
	NP8-10M/16	●	1	—
	NP8-01M/11	○	—	1
	NP8-01M/12	●	—	1
	NP8-01M/13	●	—	1
	NP8-01M/14	●	—	1
	NP8-01M/15	●	—	1
	NP8-01M/16	●	—	1
	NP8-20M/11	○	2	—
	NP8-20M/12	●	2	—
	NP8-20M/13	●	2	—
	NP8-20M/14	●	2	—
	NP8-20M/15	●	2	—
	NP8-20M/16	●	2	—
	NP8-02M/11	○	—	2
	NP8-02M/12	●	—	2
	NP8-02M/13	●	—	2
	NP8-02M/14	●	—	2
	NP8-02M/15	●	—	2
	NP8-02M/16	●	—	2
	NP8-11M/11	○	1	1
	NP8-11M/12	●	1	1
	NP8-11M/13	●	1	1
	NP8-11M/14	●	1	1
	NP8-11M/15	●	1	1
	NP8-11M/16	●	1	1
	NP8-30M/11	○	3	—
	NP8-30M/12	●	3	—
	NP8-30M/13	●	3	—
	NP8-30M/14	●	3	—
	NP8-30M/15	●	3	—
	NP8-30M/16	●	3	—
	NP8-03M/11	○	—	3
	NP8-03M/12	●	—	3
	NP8-03M/13	●	—	3
	NP8-03M/14	●	—	3
	NP8-03M/15	●	—	3
	NP8-03M/16	●	—	3
	NP8-12M/11	○	1	2
	NP8-12M/12	●	1	2
	NP8-12M/13	●	1	2
	NP8-12M/14	●	1	2
	NP8-12M/15	●	1	2
	NP8-12M/16	●	1	2
	NP8-21M/11	○	2	1
	NP8-21M/12	●	2	1
	NP8-21M/13	●	2	1
	NP8-21M/14	●	2	1
	NP8-21M/15	●	2	1
	NP8-21M/16	●	2	1

★ Φ60 Momentary Mushroom Pushbutton-(Non illuminated)

NP8-□□ M/ □□	Model	Color	⌇	⌇
	NP8-10M/21	○	1	—
	NP8-10M/22	●	1	—
	NP8-10M/23	●	1	—
	NP8-10M/24	●	1	—
	NP8-10M/25	●	1	—
	NP8-10M/26	●	1	—
	NP8-01M/21	○	—	1
	NP8-01M/22	●	—	1
	NP8-01M/23	●	—	1
	NP8-01M/24	●	—	1
	NP8-01M/25	●	—	1
	NP8-01M/26	●	—	1
	NP8-20M/21	○	2	—
	NP8-20M/22	●	2	—
	NP8-20M/23	●	2	—
	NP8-20M/24	●	2	—
	NP8-20M/25	●	2	—
	NP8-20M/26	●	2	—
	NP8-02M/21	○	—	2
	NP8-02M/22	●	—	2

«Электро-Профи» - www.ep.ru

NP8-□□ M/ □□	Model	Color	⌇	⌇
	NP8-02M/23	●	—	2
	NP8-02M/24	●	—	2
	NP8-02M/25	●	—	2
	NP8-02M/26	●	—	2
	NP8-11M/21	○	1	1
	NP8-11M/22	●	1	1
	NP8-11M/23	●	1	1
	NP8-11M/24	●	1	1
	NP8-11M/25	●	1	1
	NP8-11M/26	●	1	1
	NP8-30M/21	○	3	—
	NP8-30M/22	●	3	—
	NP8-30M/23	●	3	—
	NP8-30M/24	●	3	—
	NP8-30M/25	●	3	—
	NP8-30M/26	●	3	—
	NP8-03M/21	○	—	3
	NP8-03M/22	●	—	3
	NP8-03M/23	●	—	3
	NP8-03M/24	●	—	3
	NP8-03M/25	●	—	3
	NP8-03M/26	●	—	3
	NP8-12M/21	○	1	2
	NP8-12M/22	●	1	2
	NP8-12M/23	●	1	2
	NP8-12M/24	●	1	2
	NP8-12M/25	●	1	2
	NP8-12M/26	●	1	2
	NP8-21M/21	○	2	1
	NP8-21M/22	●	2	1
	NP8-21M/23	●	2	1
	NP8-21M/24	●	2	1
	NP8-21M/25	●	2	1
	NP8-21M/26	●	2	1

Dimension (mm)

NP8-□□M/□

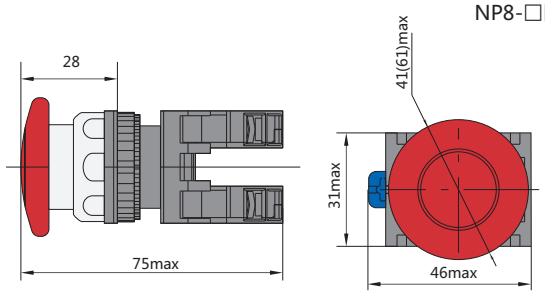

★ Φ40 Momentary Mushroom Pushbutton-illuminated
AC/DC6V, 12V, 24V, 36V, AC110V~230V

NP8-□□ M/ □□	Model	Color	⌇	⌇
	NP8-10MD/11	○	1	—
	NP8-10MD/13	●	1	—
	NP8-10MD/14	●	1	—
	NP8-10MD/15	●	1	—
	NP8-10MD/16	●	1	—
	NP8-01MD/11	○	—	1
	NP8-01MD/13	●	—	1
	NP8-01MD/14	●	—	1
	NP8-01MD/15	●	—	1
	NP8-01MD/16	●	—	1
	NP8-20MD/11	○	2	—
	NP8-20MD/13	●	2	—
	NP8-20MD/14	●	2	—
	NP8-20MD/15	●	2	—
	NP8-20MD/16	●	2	—
	NP8-02MD/11	○	—	2
	NP8-02MD/13	●	—	2
	NP8-02MD/14	●	—	2
	NP8-02MD/15	●	—	2
	NP8-02MD/16	●	—	2
	NP8-11MD/11	○	1	1
	NP8-11MD/13	●	1	1
	NP8-11MD/14	●	1	1
	NP8-11MD/15	●	1	1
	NP8-11MD/16	●	1	1

★ Φ60 Momentary Mushroom Pushbutton-illuminated
AC/DC6V, 12V, 24V, 36V, AC110V~230V

NP8-□□ M/ □□	Model	Color	⌇	⌇
	NP8-10MD/21	○	1	—
	NP8-10MD/23	●	1	—
	NP8-10MD/24	●	1	—
	NP8-10MD/25	●	1	—
	NP8-10MD/26	●	1	—
	NP8-01MD/21	○	—	1
	NP8-01MD/23	●	—	1
	NP8-01MD/24	●	—	1
	NP8-01MD/25	●	—	1
	NP8-01MD/26	●	—	1

E

«Электро-Профи» - www.ep.ru

NP8-□□ MD/ □□	Model	Color	1	2
	NP8-20MD/21	○	2	—
	NP8-20MD/23	●	2	—
	NP8-20MD/24	●	2	—
	NP8-20MD/25	●	2	—
	NP8-20MD/26	●	2	—
	NP8-02MD/21	○	—	2
	NP8-02MD/23	●	—	2
	NP8-02MD/24	●	—	2
	NP8-02MD/25	●	—	2
	NP8-02MD/26	●	—	2
	NP8-11MD/21	○	1	1
	NP8-11MD/23	●	1	1
	NP8-11MD/24	●	1	1
	NP8-11MD/25	●	1	1
	NP8-11MD/26	●	1	1

Dimension (mm)

NP8-□□MD/□

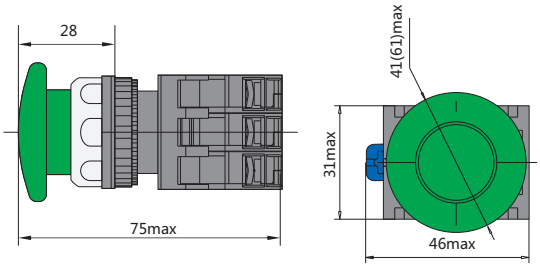

★ Φ40 Mushroom Latching Pushbutton.turn to release (Non-illuminated)

NP8-□□ ZS/ □□	Model	Color	1	2
	NP8-10ZS/14	●	1	—
	NP8-01ZS/14	●	—	1

NP8-□□ ZS/ □□	Model	Color	1	2
	NP8-20ZS/14	●	2	—
	NP8-02ZS/14	●	—	2
	NP8-11ZS/14	●	1	1

★ Φ60 Mushroom Latching Pushbutton.turn to release (Non-illuminated)

NP8-□□ ZS/ □□	Model	Color	1	2
	NP8-10ZS/24	●	1	—
	NP8-01ZS/24	●	—	1
	NP8-20ZS/24	●	2	—

«Электро-Профи» - www.ep.ru

NP8-□□ ZS/ □□	Model	Color		
	NP8-02ZS/24	●	—	2
	NP8-11ZS/24	●	1	1

★ Φ30 Mushroom Latching Pushbutton.turn to release (Non-illuminated)

NP8-□□ ZS/ □□	Model	Color		
	NP8-10ZS/34	●	1	—
	NP8-01ZS/34	●	—	1

★ Φ30 Mrushoom Latching Pushbutton.turn to release (Non-illuminated)

NP8-□□ ZS/ □□	Model	Color		
	NP8-20ZS/34	●	2	—
	NP8-02ZS/34	●	—	2
	NP8-11ZS/34	●	1	1

Dimension (mm)

NP8-□□ZS/□

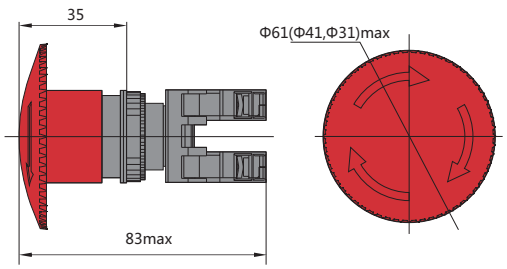

★ Double-headed flush momentory button (Non-illuminated)

NP8- □□ S	Lamp-Voltage	Model	Color		
	Non-illuminated	NP8-20S	● + ●	2	—
		NP8-02S	● + ●	—	2
		NP8-11S	● + ●	1	1

★ Double-headed flush momentory button (Illuminated)

NP8- □□ SD	Lamp-Voltage	Model	Color		
	LED: AC/DC 6V, 12V, 24V, 36V; AC 110V ～230V	NP8-20SD	● + ●	2	—
		NP8-02SD	● + ●	—	2
		NP8-11SD	● + ●	1	1

Dimension (mm)

NP8-□□S/□

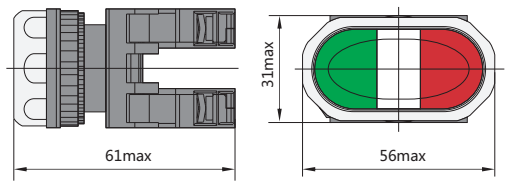

NP8-□□SD/□

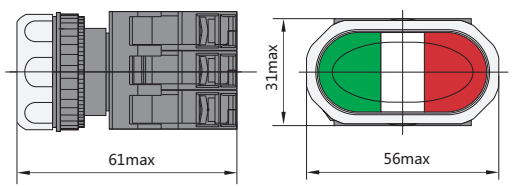

E

«Электро-Профи» - www.ep.ru

★ Light

NP8-D/ □	Lamp-Voltage	Model	Color
	LED: AC/AD 6V, 12V, 24V, 36V; AC110V～230V	NP8-D/1	○
		NP8-D/3	●
		NP8-D/4	●
		NP8-D/5	●
		NP8-D/6	●

★ Selector Switches (2 positions)-(Non-illuminated)

NP8- □□ X/ □	Metal	Color	Selector Switches		
	NP8-10X/211	○		1	—
	NP8-10X/212	●		1	—
	NP8-10X/213	●		1	—
	NP8-10X/214	●		1	—
	NP8-10X/215	●		1	—
	NP8-10X/216	●		1	—
	NP8-01X/211	○		—	1
	NP8-01X/212	●		—	1
	NP8-01X/213	●		—	1
	NP8-01X/214	●		—	1
	NP8-01X/215	●		—	1
	NP8-01X/216	●		—	1

NP8- □□ X/22□	Metal	Color	Selector Switches		
	NP8-10X/221	○		1	—
	NP8-10X/222	●		1	—
	NP8-10X/223	●		1	—
	NP8-10X/224	●		1	—
	NP8-10X/225	●		1	—
	NP8-10X/226	●		1	—
	NP8-01X/221	○		—	1
	NP8-01X/222	●		—	1
	NP8-01X/223	●		—	1
	NP8-01X/224	●		—	1
	NP8-01X/225	●		—	1
	NP8-01X/226	●		—	1

NP8- □□ X/ □	Metal	Color	Selector Switches		
	NP8-20X/211	○		2	—
	NP8-20X/212	●		2	—
	NP8-20X/213	●		2	—
	NP8-20X/214	●		2	—
	NP8-20X/215	●		2	—
	NP8-20X/216	●		2	—
	NP8-02X/211	○		—	2
	NP8-02X/212	●		—	2
	NP8-02X/213	●		—	2
	NP8-02X/214	●		—	2
	NP8-02X/215	●		—	2
	NP8-02X/216	●		—	2
	NP8-11X/211	○		1	1
	NP8-11X/212	●		1	1
	NP8-11X/213	●		1	1
	NP8-11X/214	●		1	1
	NP8-11X/215	●		1	1
	NP8-11X/216	●		1	1

Dimension (mm)

NP8-D/□

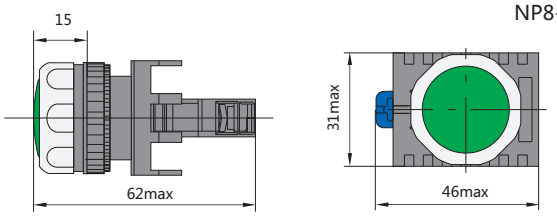

NP8- □□ X/22 □	Metal	Color	Selector Switches		
	NP8-20X/221	○		2	—
	NP8-20X/222	●		2	—
	NP8-20X/223	●		2	—
	NP8-20X/224	●		2	—
	NP8-20X/225	●		2	—
	NP8-20X/226	●		2	—
	NP8-02X/221	○	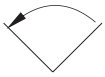	—	2
	NP8-02X/222	●		—	2
	NP8-02X/223	●		—	2
	NP8-02X/224	●		—	2
	NP8-02X/225	●		—	2
	NP8-02X/226	●		—	2
	NP8-11X/221	○		1	1
	NP8-11X/222	●		1	1
	NP8-11X/223	●		1	1
	NP8-11X/224	●		1	1
	NP8-11X/225	●		1	1
	NP8-11X/226	●		1	1

★ Selector Switches (3 positions)-(Non-illuminated)

NP8- □□ X/ □	Metal	Color	Selector Switches		
	NP8-20X/311	○		2	—
	NP8-20X/312	●		2	—
	NP8-20X/313	●		2	—
	NP8-20X/314	●		2	—
	NP8-20X/315	●		2	—
	NP8-20X/316	●		2	—
	NP8-02X/311	○		—	2
	NP8-02X/312	●		—	2
	NP8-02X/313	●		—	2
	NP8-02X/314	●		—	2
	NP8-02X/315	●		—	2
	NP8-02X/316	●		—	2
	NP8-11X/311	○		1	1
	NP8-11X/312	●		1	1
	NP8-11X/313	●		1	1
	NP8-11X/314	●		1	1
	NP8-11X/315	●		1	1
	NP8-11X/316	●		1	1

«Электро-Профи» - www.ep.ru

NP8- □□ X/33 □	Metal	Color	Selector Switches		
	NP8-20X/331	○		2	—
	NP8-20X/332	●		2	—
	NP8-20X/333	●		2	—
	NP8-20X/334	●		2	—
	NP8-20X/335	●		2	—
	NP8-20X/336	●		2	—
	NP8-02X/331	○		—	2
	NP8-02X/332	●		—	2
	NP8-02X/333	●		—	2
	NP8-02X/334	●		—	2
	NP8-02X/335	●		—	2
	NP8-02X/336	●		—	2
	NP8-11X/331	○		1	1
	NP8-11X/332	●		1	1
	NP8-11X/333	●		1	1
	NP8-11X/334	●		1	1
	NP8-11X/335	●		1	1
	NP8-11X/336	●		1	1

NP8- □□ X/37 □	Metal	Color	Selector Switches		
	NP8-20X/371	○		2	—
	NP8-20X/372	●		2	—
	NP8-20X/373	●		2	—
	NP8-20X/374	●		2	—
	NP8-20X/375	●		2	—
	NP8-20X/376	●		2	—
	NP8-02X/371	○		—	2
	NP8-02X/372	●		—	2
	NP8-02X/373	●		—	2
	NP8-02X/374	●		—	2
	NP8-02X/375	●		—	2
	NP8-02X/376	●		—	2
	NP8-11X/371	○		1	1
	NP8-11X/372	●		1	1
	NP8-11X/373	●		1	1
	NP8-11X/374	●		1	1
	NP8-11X/375	●		1	1
	NP8-11X/376	●		1	1

NP8- □□ X/38 □	Metal	Color	Selector Switches		
	NP8-20X/381	○		2	—
	NP8-20X/382	●		2	—
	NP8-20X/383	●		2	—
	NP8-20X/384	●		2	—
	NP8-20X/385	●		2	—
	NP8-20X/386	●		2	—
	NP8-02X/381	○		—	2
	NP8-02X/382	●		—	2
	NP8-02X/383	●		—	2
	NP8-02X/384	●		—	2
	NP8-02X/385	●		—	2
	NP8-02X/386	●		—	2
	NP8-11X/381	○		1	1
	NP8-11X/382	●		1	1
	NP8-11X/383	●		1	1
	NP8-11X/384	●		1	1
	NP8-11X/385	●		1	1
	NP8-11X/386	●		1	1

★ Selector Switches (2 positions) -(Illuminated)
AC/DC6V, 12V, 24V, 36V, AC110V~230V

NP8- □□ XD/ □	Metal	Color	Selector Switches		
	NP8-10XD/211	○		1	—
	NP8-10XD/213	●		1	—
	NP8-10XD/214	●		1	—
	NP8-10XD/215	●		1	—
	NP8-10XD/216	●		1	—
	NP8-01XD/211	○		—	1
	NP8-01XD/213	●		—	1
	NP8-01XD/214	●		—	1
	NP8-01XD/215	●		—	1
	NP8-01XD/216	●		—	1

NP8- □□ XD/22□	Metal	Color	Selector Switches		
	NP8-10XD/221	○		1	—
	NP8-10XD/223	●		1	—
	NP8-10XD/224	●		1	—
	NP8-10XD/225	●		1	—
	NP8-10XD/226	●		1	—
	NP8-01XD/221	○		—	1
	NP8-01XD/223	●		—	1
	NP8-01XD/224	●		—	1
	NP8-01XD/225	●		—	1
	NP8-01XD/226	●		—	1

NP8- □□ XD/ □	Metal	Color	Selector Switches		
	NP8-20XD/211	○		2	—
	NP8-20XD/213	●		2	—
	NP8-20XD/214	●		2	—
	NP8-20XD/215	●		2	—
	NP8-20XD/216	●		2	—
	NP8-02XD/211	○		—	2
	NP8-02XD/213	●		—	2
	NP8-02XD/214	●		—	2
	NP8-02XD/215	●		—	2
	NP8-02XD/216	●		—	2
	NP8-11XD/211	○		1	1
	NP8-11XD/213	●		1	1
	NP8-11XD/214	●		1	1
	NP8-11XD/215	●		1	1
	NP8-11XD/216	●		1	1

NP8- □□ XD/22□	Metal	Color	Selector Switches		
	NP8-20XD/221	○		2	—
	NP8-20XD/223	●		2	—
	NP8-20XD/224	●		2	—
	NP8-20XD/225	●		2	—
	NP8-20XD/226	●		2	—
	NP8-02XD/221	○		—	2
	NP8-02XD/223	●		—	2
	NP8-02XD/224	●		—	2
	NP8-02XD/225	●		—	2
	NP8-02XD/226	●		—	2
	NP8-11XD/221	○		1	1
	NP8-11XD/223	●		1	1
	NP8-11XD/224	●		1	1
	NP8-11XD/225	●		1	1
	NP8-11XD/226	●		1	1

E

«Электро-Профи» - www.ep.ru

★ Key Switches (2 positions)-(Non-illuminated)

NP8-□□ Y/□	Metal	Key Switches		
	NP8-10Y/21		1	—
	NP8-01Y/21		—	1

NP8-□□ Y/22	Metal	Key Switches		
	NP8-10Y/22		1	—
	NP8-01Y/22		—	1

NP8-□□ Y/□	Metal	Key Switches		
	NP8-20Y/21		2	—
	NP8-02Y/21		—	2
	NP8-11Y/21		1	1

NP8-□□ Y/22	Metal	Key Switches		
	NP8-20Y/22	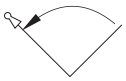	2	—
	NP8-02Y/22		—	2
	NP8-11Y/22		1	1

★ Selector Switches (3 positions) -(Illuminated)
AC/DC6V, 12V, 24V, 36V, AC110V~230V

NP8- □□ XD/ □	Metal	Color	Selector Switches		
	NP8-20XD/311	○		2	—
	NP8-20XD/313	●		2	—
	NP8-20XD/314	●		2	—
	NP8-20XD/315	●		2	—
	NP8-20XD/316	●		2	—
	NP8-02XD/311	○		—	2
	NP8-02XD/313	●		—	2
	NP8-02XD/314	●		—	2
	NP8-02XD/315	●		—	2
	NP8-02XD/316	●		—	2
	NP8-11XD/311	○		1	1
	NP8-11XD/313	●		1	1
	NP8-11XD/314	●		1	1
	NP8-11XD/315	●		1	1
	NP8-11XD/316	●		1	1

NP8- □□ XD/33□	Metal	Color	Selector Switches		
	NP8-20XD/331	○		2	—
	NP8-20XD/333	●		2	—
	NP8-20XD/334	●		2	—
	NP8-20XD/335	●		2	—
	NP8-20XD/336	●		2	—
	NP8-02XD/331	○		—	2
	NP8-02XD/333	●		—	2
	NP8-02XD/334	●		—	2
	NP8-02XD/335	●		—	2
	NP8-02XD/336	●		—	2
	NP8-11XD/331	○		1	1
	NP8-11XD/333	●		1	1
	NP8-11XD/334	●		1	1
	NP8-11XD/335	●		1	1
	NP8-11XD/336	●		1	1

NP8- □□ XD/37□	Metal	Color	Selector Switches		
	NP8-20XD/371	○	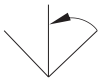	2	—
	NP8-20XD/373	●		2	—
	NP8-20XD/374	●		2	—
	NP8-20XD/375	●		2	—
	NP8-20XD/376	●		2	—
	NP8-02XD/371	○		—	2
	NP8-02XD/373	●		—	2
	NP8-02XD/374	●		—	2
	NP8-02XD/375	●		—	2
	NP8-02XD/376	●		—	2
	NP8-11XD/371	○		1	1
	NP8-11XD/373	●		1	1
	NP8-11XD/374	●		1	1
	NP8-11XD/375	●		1	1
	NP8-11XD/376	●		1	1

NP8- □□ XD/38□	Metal	Color	Selector Switches		
	NP8-20XD/381	○	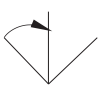	2	—
	NP8-20XD/383	●		2	—
	NP8-20XD/384	●		2	—
	NP8-20XD/385	●		2	—
	NP8-20XD/386	●		2	—
	NP8-02XD/381	○		—	2
	NP8-02XD/383	●		—	2
	NP8-02XD/384	●		—	2
	NP8-02XD/385	●		—	2
	NP8-02XD/386	●		—	2
	NP8-11XD/381	○		1	1
	NP8-11XD/383	●		1	1
	NP8-11XD/384	●		1	1
	NP8-11XD/385	●		1	1
	NP8-11XD/386	●		1	1

Dimension (mm)

NP8-□□XD/□

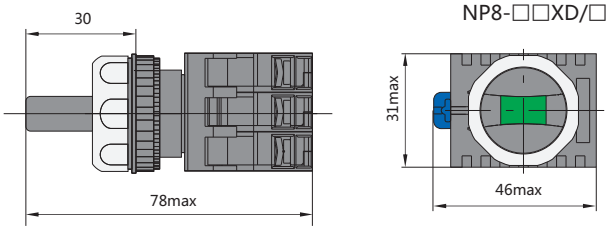

★ Key Switches (3 positions)-(Non-illuminated)

NP8-□□ Y/□	Metal	Key Switches		
	NP8-20Y/31	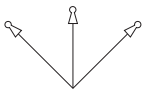	2	—
	NP8-02Y/31		—	2
	NP8-11Y/31		1	1

NP8-□□ Y/33	Metal	Key Switches		
	NP8-20Y/33	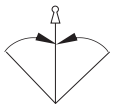	2	—
	NP8-02Y/33		—	2
	NP8-11Y/33		1	1

NP8-□□ Y/37	Metal	Key Switches		
	NP8-20Y/37	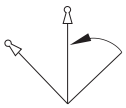	2	—
	NP8-02Y/37		—	2
	NP8-11Y/37		1	1

NP8-□□ Y/38	Metal	Key Switches		
	NP8-20Y/38	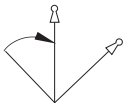	2	—
	NP8-02Y/38		—	2
	NP8-11Y/38		1	1

Dimension (mm)

NP8-□□Y/□

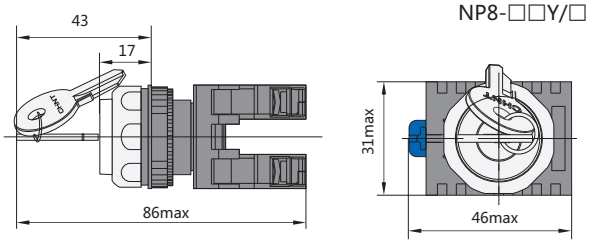

Dimension (mm)

NP8-□□X/□

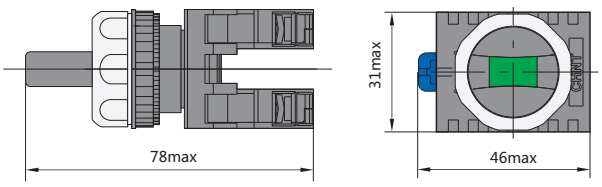

NP8-Contact NO
NP8-Contact NC

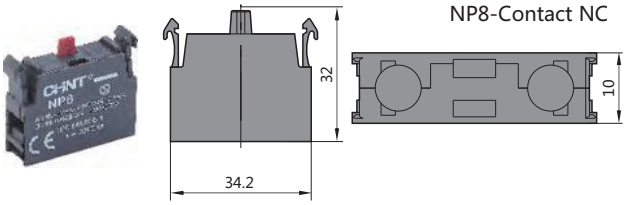

NP8-LED units

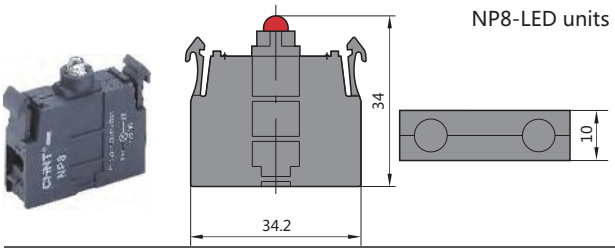

NP8-English Warning Label ϕ 60



NP8-Warning Label ϕ 60

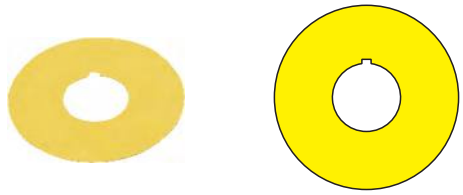

NP2,NP8,ND16 Installation tool

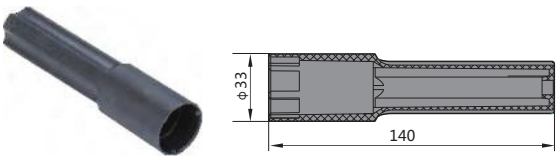

NP8 Basement

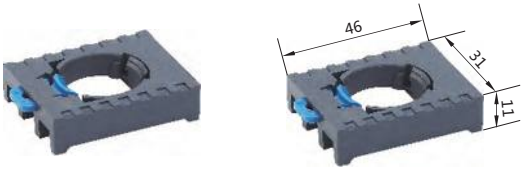

E

★ Metal-headed



Flush
NP2-BA □□

E-016



Φ40mm
mushroom
NP2-BC □□

E-018



Φ60mm
mushroom
NP2-BR □□

E-018



Φ40mm
mushroom
push-pull
NP2-BT□□

E-018



Turn to release
NP2-BS □□

E-018



Selector
NP2-BD □□

E-020



Selector
NP2-BJ □□

E-020



Key switch
NP2-BG □□

E-020



Double-headed
NP2-BL8 □□□

E-018



Illuminated
NP2-BW3 □□□

E-017



Illuminated double-
headed
NP2-BW8 □□□

E-019



Indicator light
NP2-BV □□

E-019

★ Plastic-headed



Flushbutton
NP2-EA □□

E-021



Φ40mm
mushroom
NP2-EC □□

E-022



Φ60mm
mushroom
NP2-ER □□

E-022



Turn to release
NP2-ES □□

E-024



Selector
NP2-ED □□

E-025



Selector
NP2-EJ □□

E-025



Key switch
NP2-EG □□

E-026



Double-headed
NP2-EL8 □□□

E-023



Illuminated
double-headed
NP2-EW8 □□□

E-023



Indicator light
NP2-EV □□

E-024



Economic indicator
light
NP2-EV16 □

E-025

Seperated modulars Head

★ Head-metal



Flush
NP2-BA □

E-027



Illuminated
NP2-BW3 □

E-027



Selector switch
NP2-BD □

E-028



Key switch
NP2-BG □

E-028

«Электро-Профи» - www.ep.ru



Double-headed button
NP2-BL832
E-027



NP2-BL842
E-027



Illuminated double-headed button
NP2-BW84
E-027



Indicator light
NP2-BV/□
E-027

★ Head-plastic



Flush button
NP2-EA □
E-027



Selector switch
NP2-ED □
E-028



Illuminated button
NP2-EW3□
E-027



Indicator light
NP2-EV/□
E-027



Double-headed button
NP2-EL832
E-027



Double-headed button
NP2-EL842
E-027



Illuminated double-headed button
NP2-EW84
E-027



Key switch
NP2-EG □
E-028

Adaptor

Metal



NP2-BZ009
E-028

Plastic



NP2-EZ009
E-028

Base



NP2-EW6
E-029



NP2-EV6
E-029

Accessories

Bulbs



BA9s
E-029

Warning Label



Φ60
E-029



Φ90
E-029

Water-proof enclosure



For NP2-BP
E-029



For NP2-BA
E-029



For NP2-BL832
E-029



For NP2-BL842
E-029

E

«Электро-Профи» - www.ep.ru



NP2 Series

1. General

Electric ratings: AC50/60Hz, AC380V/DC220V;
Degree of protection: IP40
Standard: IEC/EN60947-5-1

2. Operating conditions

2.1 Ambient temperature is -5℃~+40℃,the average temperature during 24 hours couldn't exceed +35℃.

2.2 Altitude: ≤2000m.

2.3 Atmosphere condition: Relative humidity of the atmosphere couldn't exceed 50% when the highest temperature is +40℃; much higher relative humidity is allowable under the condition of lower temperature, for example, when the temperature reaches +20℃, the relative humidity is up to 90%. As for dews, which contingently appear due to change of temperature,special steps should be taken.

2.4 Pollution degree: 3

2.5 Overvoltage category: Ⅱ

2.6 Tightening torque is 0.8~1.2N·m for the cable terminals. Cross section of the cable connection is 0.5~2.5mm2, and 8mm conductor length is needed.

3. Technical data

3.1 Rated insulation voltage Ui : 415V
3.2 Conventional thermal current Ith: 10A

Rated operational voltage Ue (V)	Rated operational current Ie (A)	
	AC-15	DC-13
415	1.9	-
240	3	0.27
125	-	0.55

3.3 Durability
Electric life: Flush-headed and mushroom-headed type: AC 5×10^5 operation circles, DC 2×10^5 operation circles; other type: 1×10^5 operation circles; Mechanical life: flush-headed and mushroom-headed type:
1 million operation circles, button with light:
3×10^5 operation circles;
other type: 1×10^5 operation circles.

3.4 Short-circuit protective device: NT00-16 16A

4. Data of lamps of illuminated button

Basic parameters	Direct type
	LED lamp
Rated operational current Ie	Ie≤20mA
Rated operational voltage (V)	AC/DC 6, 12, 24, 48, 110, 230
Power supply rated operational current Ie	Ie≤20mA
Rated operational voltage (V)	AC/DC 230, 380

5. Features

5.1 No-dismounting of the button from the front side thanks to anti-moving operating part of metal type button;

5.2 Reliable contacting could be ensured because of dual functions of circuit switching and self-cleaning for all contacting points;

5.3 NC and NO contacting assemblies are independent to each other, and could be freely combined for convenient replacement;

5.4 Concealed connection terminals make the operation safe and reliable. Elegant appearance due to adoption of Aluminum and Zinc alloy in metal type button operating parts and bases.

6. NP2 Series

NP2-BA □□	Model	Color		
	NP2-BA11	○	1	—
	NP2-BA21	●	1	—
	NP2-BA31	●	1	—
	NP2-BA41	●	1	—
	NP2-BA51	●	1	—
	NP2-BA61	●	1	—
	NP2-BA12	○	—	1
	NP2-BA22	●	—	1
	NP2-BA32	●	—	1
	NP2-BA42	●	—	1
	NP2-BA52	●	—	1
	NP2-BA62	●	—	1

«Электро-Профи» - www.ep.ru

Dimensions (mm)

NP2-BA □□

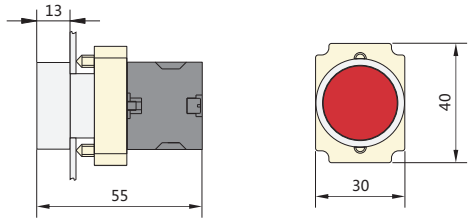

NP2-BA □□□□	Model	Color		
	NP2-BA3311		1	—
	NP2-BA2365		1	1
	NP2-BA4322		—	1
	NP2-BA2351		1	—
	NP2-BA1345		1	1

NP2-BL □□	Model	Color		
	NP2-BL42		—	1
	NP2-BL31		1	—
	NP2-BL55		1	1
	NP2-BL65		1	1
	NP2-BL15		1	1
	NP2-BL21		1	—

NP2-BW1□□□	Model	Color			Note
	NP2-BW1161 6V LED		1	—	Direct 6V~230V
	NP2-BW1361 6V LED		1	—	
	NP2-BW1462 6V LED		—	1	
	NP2-BW1561 6V LED		1	—	
	NP2-BW1661 6V LED		1	—	

NP2-BW4□□□	Model	Color			Note
	NP2-BW4161 6V LED		1	—	Direct 6V~230V
	NP2-BW4361 6V LED		1	—	
	NP2-BW4462 6V LED		—	1	
	NP2-BW4561 6V LED		1	—	
	NP2-BW4661 6V LED		1	—	

NP2-BK1 □□65	Model	Color			Note
	NP2-BK12365 6V LED		1	1	Two-position locked
	NP2-BK12465 6V LED		1	1	
	NP2-BK12565 6V LED		1	1	
	NP2-BK13365 6V LED		1	1	
	NP2-BK13465 6V LED		1	1	
	NP2-BK13565 6V LED		1	1	

NP2-BA □□	Model	Color		
	NP2-BA13		2	—
	NP2-BA23		2	—
	NP2-BA33		2	—
	NP2-BA43		2	—
	NP2-BA53		2	—
	NP2-BA63		2	—
	NP2-BA14		—	2
	NP2-BA24		—	2
	NP2-BA34		—	2
	NP2-BA44		—	2
	NP2-BA54		—	2
	NP2-BA64		—	2
	NP2-BA15		1	1
	NP2-BA25		1	1
	NP2-BA35		1	1
	NP2-BA45		1	1
	NP2-BA55		1	1
	NP2-BA65		1	1

NP2-BA □□□□

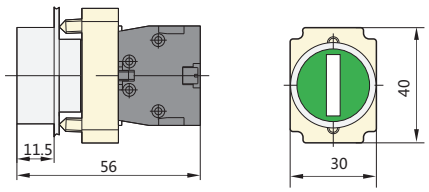

NP2-BL □□

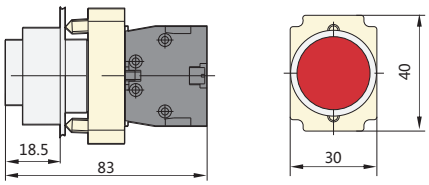

NP2-BW1 □□□

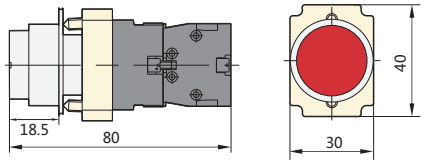

NP2-BW4 □□□

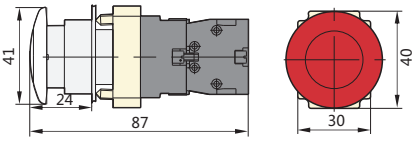

NP2-BK1 □□ 65

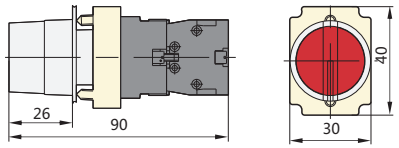

E

«Электро-Профи» - www.ep.ru

★ Momentary Flush Pushbutton (Illuminated)

NP2-BW □□	Lamp-Voltage	Model	Color		
	LED : AC /DC 6V, 12V, 24V, 36V, 48V, 110V, 230V	NP2-BW3161 LED	○	1	—
		NP2-BW3361 LED	●	1	—
		NP2-BW3461 LED	●	1	—
		NP2-BW3561 LED	●	1	—
		NP2-BW3661 LED	●	1	—
		NP2-BW3162 LED	○	—	1
		NP2-BW3362 LED	●	—	1
		NP2-BW3462 LED	●	—	1
		NP2-BW3562 LED	●	—	1
		NP2-BW3662 LED	●	—	1
	LED : AC /DC 6V, 12V, 24V, 36V, 48V, 110V, 230V	NP2-BW3163 LED	○	2	—
		NP2-BW3363 LED	●	2	—
		NP2-BW3463 LED	●	2	—
		NP2-BW3563 LED	●	2	—
		NP2-BW3663 LED	●	2	—
		NP2-BW3164 LED	○	—	2
		NP2-BW3364 LED	●	—	2
		NP2-BW3464 LED	●	—	2
		NP2-BW3564 LED	●	—	2
		NP2-BW3664 LED	●	—	2
	LED : AC/DC 6V, 12V, 24V, 36V, 48V, 110V, 230V	NP2-BW3165 LED	○	1	1
		NP2-BW3365 LED	●	1	1
		NP2-BW3465 LED	●	1	1
		NP2-BW3565 LED	●	1	1
		NP2-BW3665 LED	●	1	1

Dimensions (mm)

NP2-BW 3 □ 6 □

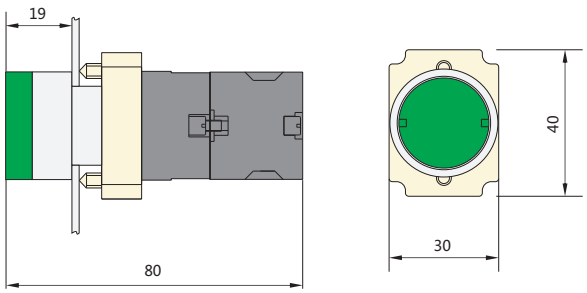

★ ϕ40 Momentary Mushroom (non-illuminated)

NP2-BC □□	Model	Color		
	NP2-BC11	○	1	—
	NP2-BC21	●	1	—
	NP2-BC31	●	1	—
	NP2-BC41	●	1	—
	NP2-BC51	●	1	—
	NP2-BC61	●	1	—
	NP2-BC12	○	—	1
	NP2-BC22	●	—	1
	NP2-BC32	●	—	1
	NP2-BC42	●	—	1
	NP2-BC52	●	—	1
	NP2-BC62	●	—	1

★ ϕ60 Momentary Mushroom (non-illuminated)

NP2-BR □□	Model	Color		
	NP2-BR11	○	1	—
	NP2-BR21	●	1	—
	NP2-BR31	●	1	—
	NP2-BR41	●	1	—
	NP2-BR51	●	1	—
	NP2-BR61	●	1	—
	NP2-BR12	○	—	1
	NP2-BR22	●	—	1
	NP2-BR32	●	—	1
	NP2-BR42	●	—	1
	NP2-BR52	●	—	1
	NP2-BR62	●	—	1

«Электро-Профи» - www.ep.ru

★ Φ40 Mushroom push-pull(non-illuminated)

NP2-BT □□	Model	Color		
	NP2-BT42	●	—	1

Dimensions (mm)

NP2-BC □□
NP2-BR □□
NP2-BT □□

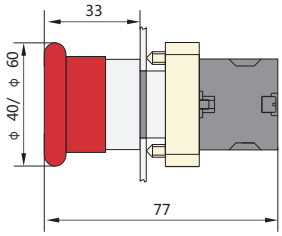

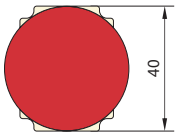

★ Double-headed flush momentory button (Non-illuminated)

NP2-BL8 □□	Lamp-Voltage	Model	Color		
	--------	NP2-BL8325	● + ●	1	1
	--------	NP2-BL8425	● + ●	1	1

NP2-BC □□	Model	Color		
	NP2-BC13	○	2	—
	NP2-BC23	●	2	—
	NP2-BC33	●	2	—
	NP2-BC43	●	2	—
	NP2-BC53	●	2	—
	NP2-BC63	●	2	—
	NP2-BC14	○	—	2
	NP2-BC24	●	—	2
	NP2-BC34	●	—	2
	NP2-BC44		—	2
	NP2-BC54	●	—	2
	NP2-BC64	●	—	2
	NP2-BC15	○	1	1
	NP2-BC25	●	1	1
	NP2-BC35	●	1	1
	NP2-BC45	●	1	1
	NP2-BC55	●	1	1
	NP2-BC65	●	1	1

NP2-BR □□	Model	Color		
	NP2-BR13	○	2	—
	NP2-BR23	●	2	—
	NP2-BR33	●	2	—
	NP2-BR43	●	2	—
	NP2-BR53	●	2	—
	NP2-BR63	●	2	—
	NP2-BR14	○	—	2
	NP2-BR24	●	—	2
	NP2-BR34	●	—	2
	NP2-BR44	●	—	2
	NP2-BR54	●	—	2
	NP2-BR64	●	—	2
	NP2-BR15	○	1	1
	NP2-BR25	●	1	1
	NP2-BR35	●	1	1
	NP2-BR45	●	1	1
	NP2-BR55	●	1	1
	NP2-BR65	●	1	1

Dimensions (mm)

NP2-BL8325

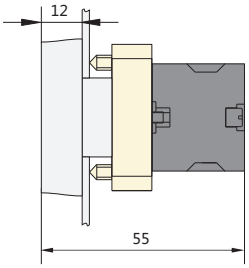

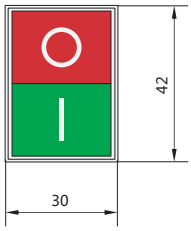

E

«Электро-Профи» - www.ep.ru

★ Double-headed flush momentory button (Illuminated)

NP2-BW8 □□	Lamp-Voltage	Model	Color		
	LED : AC/DC 6V, 12V, 24V, 36V, 48V, 110V, 230V	NP2-BW8465	● + ●	1	1

★ Mushroom button latching, turn to release(Non-illuminated)

NP2-BS □□	Mushroom -Diameter	Model	Color		
	ϕ30	NP2-BS441	●	1	—
		NP2-BS442	●	—	1
	ϕ40	NP2-BS541	●	1	—
		NP2-BS542	●	—	1
	ϕ60	NP2-BS641	●	1	—
		NP2-BS642	●	—	1
	ϕ30	NP2-BS443	●	2	—
		NP2-BS444	●	—	2
		NP2-BS445	●	1	1
	ϕ40	NP2-BS543	●	2	—
		NP2-BS544	●	—	2
		NP2-BS545	●	1	1
	ϕ60	NP2-BS643	●	2	—
		NP2-BS644	●	—	2
		NP2-BS645	●	1	1

★ Indicator

NP2-BV □□	Lamp-Voltage	Model	Color
	LED: AC 6V, 12V, 24V, 36V, 48V, 110V, 230V	NP2-BV61	○
		NP2-BV63	●
		NP2-BV64	●
		NP2-BV65	●
		NP2-BV66	●

Dimensions (mm)

NP2-BW8 □ 6 □

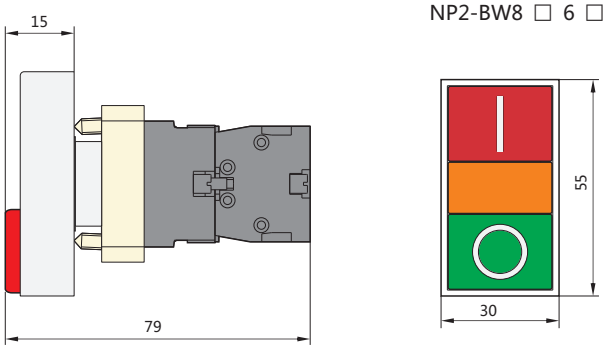

Dimensions (mm)

NP2-BS □□□

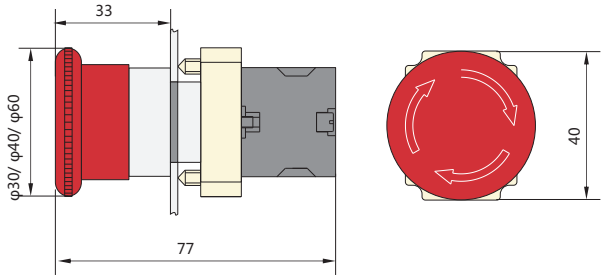

Dimensions (mm)

NP2-BV 6 □

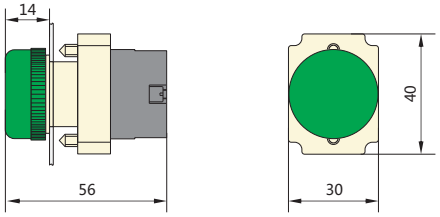

«Электро-Профи» - www.ep.ru

★ Selector Switches (2 positions)-(Non-illuminated)

NP2-BD (J, G) □□	Metal	Selector Switches	1	2
	NP2-BD21		1	—
	NP2-BD22		—	1
	NP2-BD23		2	—
	NP2-BD24		—	2
	NP2-BD25		1	1
	NP2-BD41		1	—
	NP2-BD42		—	1
	NP2-BD43		2	—
	NP2-BD44		—	2
	NP2-BD45		1	1
	NP2-BJ21		1	—
	NP2-BJ22		—	1
	NP2-BJ23		2	—
	NP2-BJ24		—	2
	NP2-BJ25		1	1
	NP2-BJ41		1	—
	NP2-BJ42		—	1
	NP2-BJ43		2	—
	NP2-BJ44		—	2
	NP2-BJ45		1	1
	NP2-BG21		1	—
	NP2-BG22		—	1
	NP2-BG23		2	—
	NP2-BG24		—	2
	NP2-BG25		1	1
	NP2-BG21B		1	—
	NP2-BG22B		—	1
	NP2-BG23B		2	—
	NP2-BG24B		—	2
	NP2-BG25B		1	1
	NP2-BG41	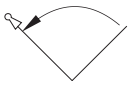	1	—
	NP2-BG42		—	1
	NP2-BG43		2	—
	NP2-BG44		—	2
	NP2-BG45		1	1

★ Selector Switches (3 positions)-(Non-illuminated)

NP2-BD (J, G) □□	Metal	Selector Switches	1	2
	NP2-BD33	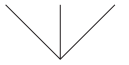	2	—
	NP2-BD34		—	2
	NP2-BD35		1	1
	NP2-BD73	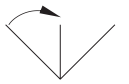	2	—
	NP2-BD74		—	2
	NP2-BD75		1	1
	NP2-BD53		2	—
	NP2-BD54		—	2
	NP2-BD55		1	1
	NP2-BD83		2	—
	NP2-BD84		—	2
	NP2-BD85		1	1
	NP2-BJ33	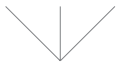	2	—
	NP2-BJ34		—	2
	NP2-BJ35		1	1
	NP2-BJ73	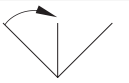	2	—
	NP2-BJ74		—	2
	NP2-BJ75		1	1
	NP2-BJ53		2	—
	NP2-BJ54		—	2
	NP2-BJ55		1	1
	NP2-BJ83	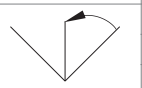	2	—
	NP2-BJ84		—	2
	NP2-BJ85		1	1
	NP2-BG33	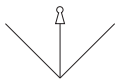	2	—
	NP2-BG34		—	2
	NP2-BG35		1	1
	NP2-BG73	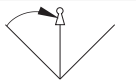	2	—
	NP2-BG74		—	2
	NP2-BG75		1	1
	NP2-BG53	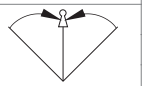	2	—
	NP2-BG54		—	2
	NP2-BG55		1	1
	NP2-BG83	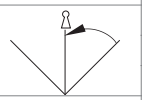	2	—
	NP2-BG84		—	2
	NP2-BG85		1	1
	NP2-BG33D	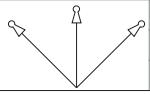	2	—
	NP2-BG34D		—	2
	NP2-BG35D		1	1

Dimensions (mm)

NP2-BD □□

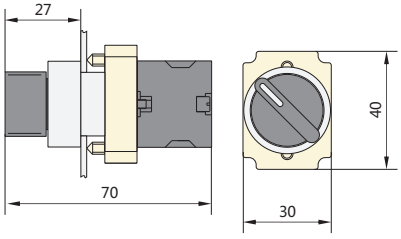

NP2-BJ □□

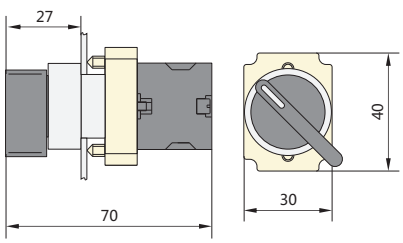

NP2-BG □□

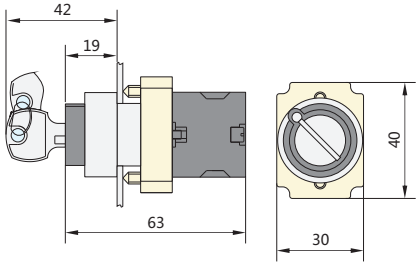

«Электро-Профи» - www.ep.ru

★ Momentary Flush Pushbutton (Non-illuminated)

NP2-EA □□	Model	Color	⌇	⌇
	NP2-EA11	○	1	—
	NP2-EA21	●	1	—
	NP2-EA31	●	1	—
	NP2-EA41	●	1	—
	NP2-EA51	●	1	—
	NP2-EA61	●	1	—
	NP2-EA12	○	—	1
	NP2-EA22	●	—	1
	NP2-EA32	●	—	1
	NP2-EA42	●	—	1
	NP2-EA52	●	—	1
	NP2-EA62	●	—	1

Dimensions (mm)

NP2-EA □□

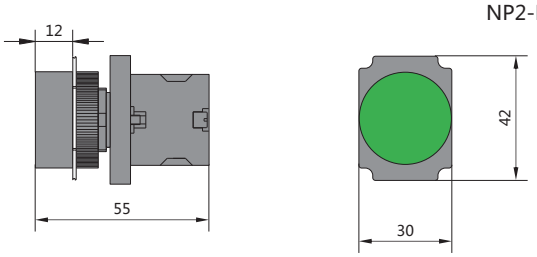

★ Momentary Flush Pushbutton (Illuminated)

NP2-EW3 □□	Lamp-Voltage	Model	Color	⌇	⌇
	LED: AC/DC 6V, 12V, 24V, 36V, 48V, 110V, 230V	NP2-EW3161	○	1	—
		NP2-EW3361	●	1	—
		NP2-EW3461	●	1	—
		NP2-EW3561	●	1	—
		NP2-EW3661	●	1	—
		NP2-EW3162	○	—	1
		NP2-EW3362	●	—	1
		NP2-EW3462	●	—	1
		NP2-EW3562	●	—	1
		NP2-EW3662	●	—	1
		NP2-EW3165	○	1	1
		NP2-EW3365	●	1	1
		NP2-EW3465	●	1	1
		NP2-EW3565	●	1	1
		NP2-EW3665	●	1	1

NP2-EA □□	Model	Color	⌇	⌇
	NP2-EA13	○	2	—
	NP2-EA23	●	2	—
	NP2-EA33	●	2	—
	NP2-EA43	●	2	—
	NP2-EA53	●	2	—
	NP2-EA63	●	2	—
	NP2-EA14	○	—	2
	NP2-EA24	●	—	2
	NP2-EA34	●	—	2
	NP2-EA44	●	—	2
	NP2-EA54	●	—	2
	NP2-EA64	●	—	2
	NP2-EA15	○	1	1
	NP2-EA25	●	1	1
	NP2-EA35	●	1	1
	NP2-EA45	●	1	1
	NP2-EA55	●	1	1
	NP2-EA65	●	1	1

Dimensions (mm)

NP2-EW 3 □ 6 □

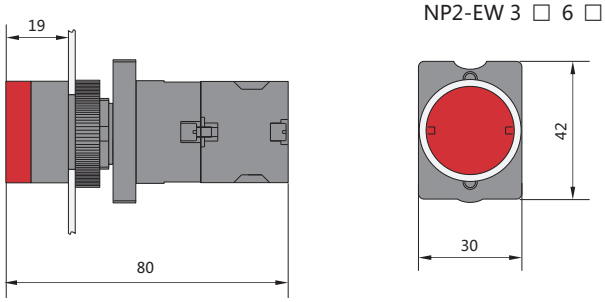

«Электро-Профи» - www.ep.ru

★ Φ40 Momentary Mushroom button -(Non-illuminated)

NP2-EC □□	Model	Color		
	NP2-EC11	○	1	—
	NP2-EC21	●	1	—
	NP2-EC31	●	1	—
	NP2-EC41	●	1	—
	NP2-EC51	●	1	—
	NP2-EC61	●	1	—
	NP2-EC12	○	—	1
	NP2-EC22	●	—	1
	NP2-EC32	●	—	1
	NP2-EC42	●	—	1
	NP2-EC52	●	—	1
	NP2-EC62	●	—	1
	NP2-EC13	○	2	—
	NP2-EC23	●	2	—
	NP2-EC33	●	2	—
	NP2-EC43	●	2	—
	NP2-EC53	●	2	—
	NP2-EC63	●	2	—
	NP2-EC14	○	—	2
	NP2-EC24	●	—	2
	NP2-EC34	●	—	2
	NP2-EC44	●	—	2
	NP2-EC54	●	—	2
	NP2-EC64	●	—	2
	NP2-EC15	○	1	1
	NP2-EC25	●	1	1
	NP2-EC35	●	1	1
	NP2-EC45	●	1	1
	NP2-EC55	●	1	1
	NP2-EC65	●	1	1

★ Φ60 Momentary Mushroom button -(Non-illuminated)

NP2-ER □□	Model	Color		
	NP2-ER11	○	1	—
	NP2-ER21	●	1	—
	NP2-ER31	●	1	—
	NP2-ER41	●	1	—
	NP2-ER51	●	1	—
	NP2-ER61	●	1	—
	NP2-ER12	○	—	1
	NP2-ER22	●	—	1
	NP2-ER32	●	—	1
	NP2-ER42	●	—	1
	NP2-ER52	●	—	1
	NP2-ER62	●	—	1
	NP2-ER13	○	2	—
	NP2-ER23	●	2	—
	NP2-ER33	●	2	—
	NP2-ER43	●	2	—
	NP2-ER53	●	2	—
	NP2-ER63	●	2	—
	NP2-ER14	○	—	2
	NP2-ER24	●	—	2
	NP2-ER34	●	—	2
	NP2-ER44	●	—	2
	NP2-ER54	●	—	2
	NP2-ER64	●	—	2
	NP2-ER15	○	1	1
	NP2-ER25	●	1	1
	NP2-ER35	●	1	1
	NP2-ER45	●	1	1
	NP2-ER55	●	1	1
	NP2-ER65	●	1	1

Dimensions (mm)

NP2-EC □□
NP2-ER □□

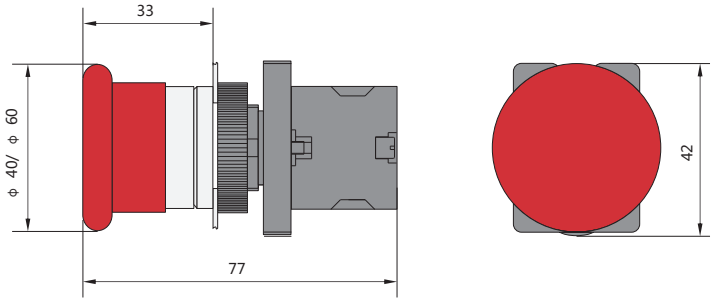

E

«Электро-Профи» - www.ep.ru

★ Double-headed flush momentory button -(Non-illuminated)

NP2-EL8 □□	Lamp-Voltage	Model	Color		
	--------	NP2-EL8325	● + ●	1	1
	--------	NP2-EL8425	● + ●	1	1

Dimensions (mm)

NP2-EL8325

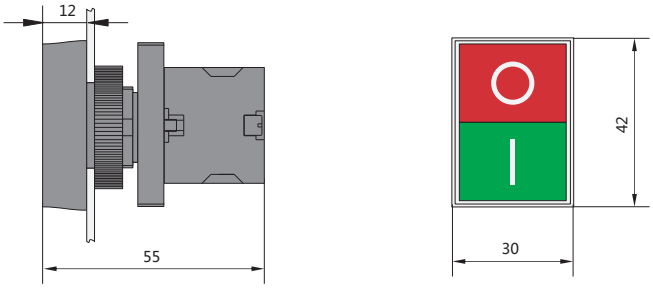

★ Double-headed flush momentory button (Illuminated)

NP2-EW8 □□	Lamp-Voltage	Model	Color		
	LED: AC/DC 6V, 12V, 24V, 36V, 48V, 110V, 230V	NP2-EW8465	● + ●	1	1

Dimensions (mm)

NP2-EW 8 □ 6 □

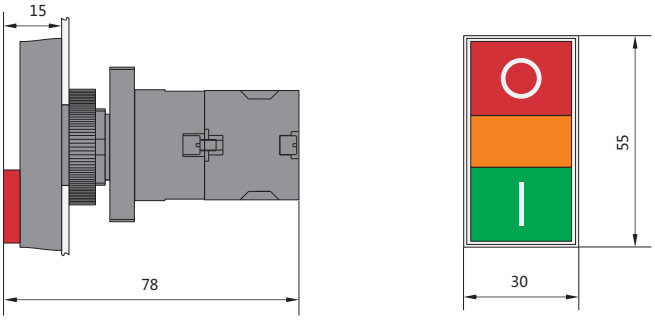

«Электро-Профи» - www.ep.ru

★ Mushroom button latching, turn to release (Non-illuminated)

NP2-ES □□	Mushroom-Diameter	Model	Color		
	ϕ30	NP2-ES441		1	—
		NP2-ES442		—	1
	ϕ40	NP2-ES541		1	—
		NP2-ES542	●	—	1
	ϕ60	NP2-ES641		1	—
		NP2-ES642		—	1
	ϕ30	NP2-ES443		2	—
		NP2-ES444		—	2
		NP2-ES445		1	1
	ϕ40	NP2-ES543		2	—
		NP2-ES544	●	—	2
		NP2-ES545		1	1
	ϕ60	NP2-ES643		2	—
		NP2-ES644		—	2
		NP2-ES645		1	1

Dimensions (mm)

NP2-ES □□□

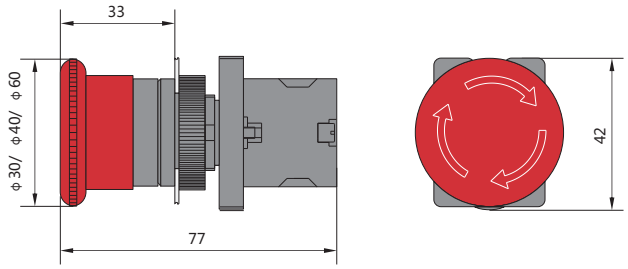

★ Indicator

NP2-EV □□	Lamp-Voltage	Model	Color
	LED: AC/DC 6V, 12V, 24V, 36V, 48V, 110V, 230V	NP2-EV61	○
		NP2-EV63	●
		NP2-EV64	●
		NP2-EV65	●
		NP2-EV66	●

Dimensions (mm)

NP2-EV 6 □

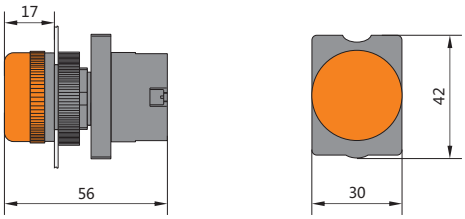

«Электро-Профи» - www.ep.ru

★ Indicator (compact)

NP2-EV16 □□	Lamp-Voltage	Model	Color
	LED: AC 6V, 12V, 24V, 36V, 48V, 110V, 230V	NP2-EV161	○
		NP2-EV163	●
		NP2-EV164	●
		NP2-EV165	●
		NP2-EV166	●

★ Selector Switches (2 positions)-(Non-illuminated)

NP2-ED (J、G) □□	Model	Selector Switches		
	NP2-ED21		1	—
	NP2-ED22		—	1
	NP2-ED23		2	—
	NP2-ED24		—	2
	NP2-ED25		1	1
	NP2-ED41		1	—
	NP2-ED42		—	1
	NP2-ED43		2	—
	NP2-ED44		—	2
	NP2-ED45		1	1
	NP2-EJ21		1	—
	NP2-EJ22		—	1
	NP2-EJ23		2	—
	NP2-EJ24		—	2
	NP2-EJ25		1	1
	NP2-EJ41	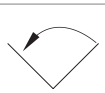	1	—
	NP2-EJ42		—	1
	NP2-EJ43		2	—
	NP2-EJ44		—	2
	NP2-EJ45		1	1

Dimensions (mm)

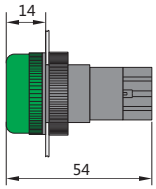

★ Selector Switches (3 positions)-(Non-illuminated)

NP2-ED (J、G) □□	Model	Selector Switches		
	NP2-ED33	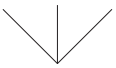	2	—
	NP2-ED34		—	2
	NP2-ED35		1	1
	NP2-ED73	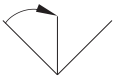	2	—
	NP2-ED74		—	2
	NP2-ED75		1	1
	NP2-ED53		2	—
	NP2-ED54		—	2
	NP2-ED55		1	1
	NP2-ED83		2	—
	NP2-ED84		—	2
	NP2-ED85		1	1
	NP2-EJ33	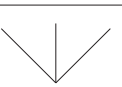	2	—
	NP2-EJ34		—	2
	NP2-EJ35		1	1
	NP2-EJ73	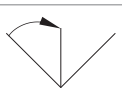	2	—
	NP2-EJ74		—	2
	NP2-EJ75		1	1
	NP2-EJ53	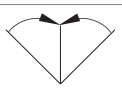	2	—
	NP2-EJ54		—	2
	NP2-EJ55		1	1
	NP2-EJ83	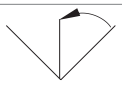	2	—
	NP2-EJ84		—	2
	NP2-EJ85		1	1

Dimensions (mm)

NP2-ED □□

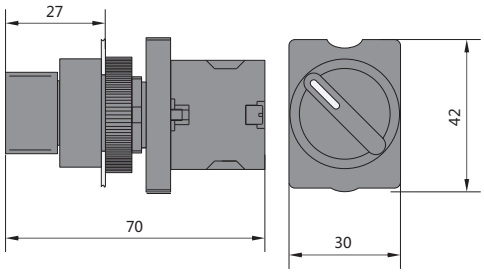

«Электро-Профи» - www.ep.ru

★ Selector Switches (2 positions)-(Non-illuminated)

NP2-ED (J、G) □□	Model	Selector Switches		
	NP2-EG21		1	—
	NP2-EG22		—	1
	NP2-EG23		2	—
	NP2-EG24		—	2
	NP2-EG25		1	1
	NP2-EG41	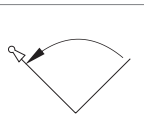	1	—
	NP2-EG42		—	1
	NP2-EG43		2	—
	NP2-EG44		—	2
	NP2-EG45		1	1
	NP2-EG21B	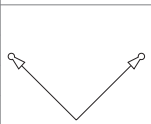	1	—
	NP2-EG22B		—	1
	NP2-EG23B		2	—
	NP2-EG24B		—	2
	NP2-EG25B		1	1

★ Selector Switches (3 positions)-(Non-illuminated)

NP2-ED (J、G) □□	Model	Selector Switches		
	NP2-EG33	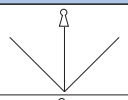	2	—
	NP2-EG34		—	2
	NP2-EG35		1	1
	NP2-EG73	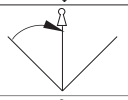	2	—
	NP2-EG74		—	2
	NP2-EG75		1	1
	NP2-EG53	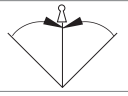	2	—
	NP2-EG54		—	2
	NP2-EG55		1	1
	NP2-EG83	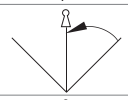	2	—
	NP2-EG84		—	2
	NP2-EG85		1	1
	NP2-EG33D	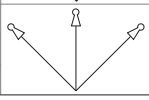	2	—
	NP2-EG34D		—	2
	NP2-EG35D		1	1

Dimensions (mm)

NP2-EJ □□

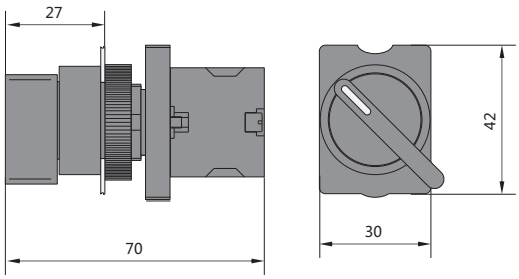

NP2-EG □□

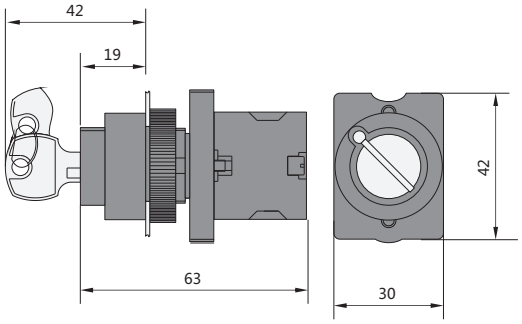

E

«Электро-Профи» - www.ep.ru

Head

★ Flush Momentary button-(Non-illuminated)

NP2-BA □	Metal	Specifications
	NP2-BA1	○
	NP2-BA2	●
	NP2-BA3	●
	NP2-BA4	●
	NP2-BA5	●
	NP2-BA6	●

NP2-BA□□□	Metal	Specifications
	NP2-BA331	●
	NP2-BA236	●
	NP2-BA432	●
	NP2-BA235	●
	NP2-BA134	○
	NP2-BA637	●

★ Flush Momentary button-(Illuminated)

NP2-BW3 □	Metal	Specifications
	NP2-BW31	○
	NP2-BW33	●
	NP2-BW34	●
	NP2-BW35	●
	NP2-BW36	●

★ Double head button-(Non-illuminated)

NP2-BL □□□	Metal	Specifications
	NP2-BL832	Flush button
	NP2-BL842	Flush button + projecting button

★ Double head button-(Illuminated)

NP2-BW □□	Metal	Specifications
	NP2-BW84	Flush button + projecting button

★ Indicator light

NP2-BV/ □	Metal	Specifications
	NP2-BV/1	○
	NP2-BV/3	●
	NP2-BV/4	●
	NP2-BV/5	●
	NP2-BV/6	●

★ Emergency stop button

NP2-BS□4	Metal	Specifications
	NP2-BS44	4 : Turn restoration Φ30
	NP2-BS54	5 : Turn restoration Φ40
	NP2-BS64	6 : Turn restoration Φ60

NP2-EA □	Plastic	Specifications
	NP2-EA1	○
	NP2-EA2	●
	NP2-EA3	●
	NP2-EA4	●
	NP2-EA5	●
	NP2-EA6	●

NP2-EW3 □	Plastic	Specifications
	NP2-EW31	○
	NP2-EW33	●
	NP2-EW34	●
	NP2-EW35	●
	NP2-EW36	●

NP2-EL □□□	Plastic	Specifications
	NP2-EL832	Flush button
	NP2-EL842	Flush button + projecting button

NP2-EW □□	Plastic	Specifications
	NP2-EW84	Flush button + projecting button

NP2-EV/ □	Plastic	Specifications
	NP2-EV/1	○
	NP2-EV/3	●
	NP2-EV/4	●
	NP2-EV/5	●
	NP2-EV/6	●

NP2-ES□4	Plastic	Specifications
	NP2-ES34	3 : Status indication turn restoration Φ40
	NP2-ES44	4 : Turn restoration Φ30
	NP2-ES54	5 : Turn restoration Φ40
	NP2-ES64	6 : Turn restoration Φ60

«Электро-Профи» - www.ep.ru

★ Head of Selector Switch-(Non-illuminated)

NP2-BD/ □	Metal	Specifications
	NP2-BD2	
	NP2-BD3	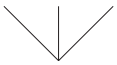
	NP2-BD4	
	NP2-BD5	
	NP2-BG7	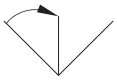
	NP2-BG8	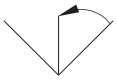

★ Head of Key Switch-(Non-illuminated)

NP2-BG □	Metal	Specifications
	NP2-BG2	
	NP2-BG2B	
	NP2-BG3	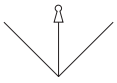
	NP2-BG3D	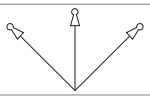
	NP2-BG4	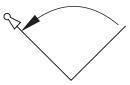
	NP2-BG5	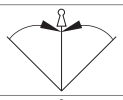
	NP2-BG7	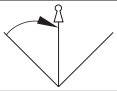
	NP2-BG8	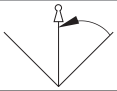

★ Adapter

NP2-BZ009	Metal	Specifications
	NP2-BZ009	For NP2-B □□

NP2-ED/ □	Plastic	Specifications
	NP2-ED2	
	NP2-ED3	
	NP2-ED4	
	NP2-ED5	
	NP2-EG7	
	NP2-EG8	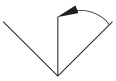

NP2-EG □	Plastic	Specifications
	NP2-EG2	
	NP2-EG2B	
	NP2-EG3	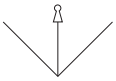
	NP2-EG3D	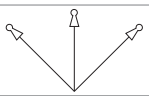
	NP2-EG4	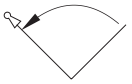
	NP2-EG5	
	NP2-EG7	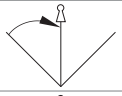
	NP2-EG8	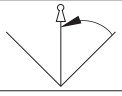

NP2-EZ009	Plastic	Specifications
	NP2-EZ009	For NP2-E □□

E

«Электро-Профи» - www.ep.ru

★ Waring label

NP2-BY	Plastic	Specifications
	NP2-BY9101 NP2-BY9330	Φ60 (blank) Φ60 (printed)
	NP2-BY8101 NP2-BY8330	Φ90 (blank) Φ90 (printed)

★ Contact block

NP2-BE □□□	Metal	Specifications
	NP2-BE101	NO Contact
	NP2-BE102	NC Contact
	NP2-BE103	2NO Contact
	NP2-BE104	2NC Contact
	NP2-BE105	1NO+1NC Contact

★ Base for Illuminated (without lamp)

NP2-EW □/EV □	Metal	Specifications
	NP2-EW6/EV6	Direct type

★ Lamp (LED)

BA9s	Specifications	
	AC/DC 6V	○
	AC/DC 6V	●
	AC/DC 6V	●
	AC/DC 6V	●
	AC/DC 6V	●
	AC/DC 12V	○
	AC/DC 12V	●
	AC/DC 12V	●
	AC/DC 12V	●
	AC/DC 12V	●
	AC/DC 24V	○
	AC/DC 24V	●
	AC/DC 24V	●
	AC/DC 24V	●
	AC/DC 24V	●
	AC/DC 36V	○
	AC/DC 36V	●
	AC/DC 36V	●
	AC/DC 36V	●
	AC/DC 36V	●

NP2-BZ	Plastic	Specifications
	NP2-BZ31	30mm(H)X45mm(L)

★ Head-enclosure of Push-button- (Water proof)

	Specifications
	For NP2-BP ○ ● ● ● ● ●
	For NP2-BA(EA)

	Specifications
	For NP2-BL(EL)832
	For NP2-BL(EL)842

BA9s	Specifications	
	AC/DC 48V	○
	AC/DC 48V	●
	AC/DC 48V	●
	AC/DC 48V	●
	AC/DC 48V	●
	AC/DC 110V	○
	AC/DC 110V	●
	AC/DC 110V	●
	AC/DC 110V	●
	AC/DC 110V	●
	AC/DC 220V	○
	AC/DC 220V	●
	AC/DC 220V	●
	AC/DC 220V	●
	AC/DC 220V	●

«Электро-Профи» - www.ep.ru

★ Enclosure

PIC	Type code of button with box (construction code)	Meaning of the type code		
		Configure	Sign	Color of the cover
	B101H29	Gree flush button, 1NO	Scutcheon sign: START	French grey
	B102	Gree flush button, 1NO	Push button sign: I	French grey
	B103	Gree flush button, 1NO	Push button sign: START	French grey
	B111H29	Red flush button, 1NC	Scutcheon sign: STOP	French grey
	B112	Red flush button, 1NC	Push button sign: O	French grey
	B114	Red flush button, 1NC	Push button sign: STOP	French grey
	B174H29	Red Φ40 mushroom button self-locking, knob reset 1NC	Scutcheon sign: STOP	French grey
	J174 H29	Red Φ40 mushroom button self-locking, knob reset 1NC	Scutcheon sign: STOP	Yellow
	J174	Red Φ40 mushroom button self-locking, knob reset 1NC		Yellow
	B132H29	Two positons locking knob,1NO	Scutcheon sign:STOP START	French grey
	B142H29	Two positons locking key button,1NO	Scutcheon sign:STOP START	French grey
	B211H29	Green flush button 1NO Red flush button 1NC	Scutcheon sign:STOP,START	French grey
	B213	Green flush button 1NO Red flush button 1NC	Push button sign: I O	French grey
	B215	Green flush button 1NO Red flush button 1NC	Push button sign: START,STOP	French grey
	B222	White flush button 1NO Black fulsh button 1NO	Push button sign: ↑↓	French grey
	B223	White flush button 1NO Black fulsh button 1NO	Push button sign: → ←	French grey

E

«Электро-Профи» - www.ep.ru

PIC	Type code of button with box (construction code)	Meaning of the type code		
		Configure	Sign	Color of the cover
	B311H29	Green flush button 1NO Red flush button 1NC Green flush button 1NO	Scutcheon sign: FORWARD STOP, REVERSE	French grey
	B321H29	Green flush button 1NO Red flush button 1NC Green flush button 1NO	Scutcheon sign: UP, STOP DOWN	French grey
	B341H29	Green flush button 1NO Red flush button 1NC Green flush button 1NO	Scutcheon sign: OPEN, STOP CLOSE	French grey
	B339	Green flush button 1NO Red flush button 1NC Black flush button 1NO	Push button sign: I O II	French grey
	B324	White flush button 1NO Red flush button 1NC Black flush button 1NO	Push button sign: ↑ O ↓	French grey
	B334	White flush button 1NO Red flush button 1NC Black flush button 1NO	Push button sign: → O ←	French grey
	B361H29	Red pilot lamp, 220V LED lamp, direct type Green flush button 1NO Red flush button 1NC	Scutcheon sign: START, STOP	French grey
	B363	Red pilot lamp, 220V LED lamp, direct type Green flush button 1NO Red flush button 1NC	Push button sign: I O	French grey
	B366	Red pilot lamp, 220V LED lamp, direct type Green flush button 1NO Red flush button 1NC	Push button sign: START, STOP	French grey
	B01,B02,B03	Empty boxes, of which there is one hole, two holes and three holes.		French grey

Enclosure: normally opened cotact, normally closed contact

«Электро-Профи» - www.ep.ru



NP6 Series

1. General

Electric ratings: AC50/60Hz, AC220V/DC220V;
Degree of protection: IP40
Standard: IEC/EN60947-5-1

2. Operating conditions

2.1 Ambient temperature is -5℃~+40℃, the average temperature during 24 hours couldn't exceed +35℃.

2.2 Altitude: ≤2000m.

2.3 Atmosphere condition: Relative humidity of the atmosphere couldn't exceed 50% when the highest temperature is +40℃; much higher relative humidity is allowable under the condition of lower temperature, for example, when the temperature reaches +20℃, the relative humidity is up to 90%. As for dews, which contingently appear due to change of temperature, special steps should be taken.

2.4 Pollution degree: 3

2.5 Overvoltage category: Ⅱ

3. Technical data

Rated insulated voltage Ui: 250V
Conventional heating current Ith: 3A

Rated operational voltage Ue (V)		24	110	220
Rated operational current Ie (A)	AC-15	-	0.7	0.5
	DC-13	0.7	-	0.1

E

CE



Flush , latching
NP6-□□ BS / □□

E-033~E-034



Flush, momentary
NP6-□□ B / □□

E-033



Illuminated flush, latching
NP6-□□ DS / □□

E-034~E-035



Illuminated flush, momentary
NP6-□□ D / □□

E-034~E-035



Mushroom-headed, momentary
NP6-□□ J / □

E-035



Mushroom-headed, latching
NP6-□□ ZS / □

E-036



Key switch
NP6-□□ Y / □□

E-036



Selector switch
NP6-□□ X / □□

E-035



Indicator light
NP6-XD / □□

E-036

«Электро-Профи» - www.ep.ru

4. Data of lamps of illuminated button

Rated operational voltage (V)	6	12	24
Rated operational current (mA)	≤20	≤20	≤20
Color	● ● ● ● ○		
Life (h)	≥30000		

4.1 Contact

Contact resistance: ≤50mΩ

4.2 Durability

Electric life (operation circles) Instantaneous button: AC: 500×10^3 ,DC: 250×10^3 Selector switch: 100×10^3

Mechanical life (operation circles) Instantaneous button: 1×10^6 Selector switch: 100×10^3

4.3 Short-circuit protective device: NT00-16 6A

★ Momentary Flush Pushbutton-(Non illuminated)

NP6-□□ B/ □ J	Model	Color	⌞┘
	NP6-11B/1J	○	1
	NP6-11B/2J	●	1
	NP6-11B/3J	●	1
	NP6-11B/4J	●	1
	NP6-11B/5J	●	1
	NP6-11B/6J	●	1
	NP6-11B/7J	●	1
	NP6-22B/1J	○	2
	NP6-22B/2J	●	2
	NP6-22B/3J	●	2
	NP6-22B/4J	●	2
	NP6-22B/5J	●	2
	NP6-22B/6J	●	2
	NP6-22B/7J	●	2

NP6-□□ B/ □ Y	Model	Color	⌞┘
	NP6-11B/1Y	○	1
	NP6-11B/2Y	●	1
	NP6-11B/3Y	●	1
	NP6-11B/4Y	●	1
	NP6-11B/5Y	●	1
	NP6-11B/6Y	●	1
	NP6-11B/7Y	●	1
	NP6-22B/1Y	○	2
	NP6-22B/2Y	●	2
	NP6-22B/3Y	●	2
	NP6-22B/4Y	●	2
	NP6-22B/5Y	●	2
	NP6-22B/6Y	●	2
	NP6-22B/7Y	●	2

NP6-□□ B/ □ F	Model	Color	⌞┘
	NP6-11B/1F	○	1
	NP6-11B/2F	●	1
	NP6-11B/3F	●	1
	NP6-11B/4F	●	1
	NP6-11B/5F	●	1
	NP6-11B/6F	●	1
	NP6-11B/7F	●	1
	NP6-22B/1F	○	2
	NP6-22B/2F	●	2
	NP6-22B/3F	●	2
	NP6-22B/4F	●	2
	NP6-22B/5F	●	2
	NP6-22B/6F	●	2
	NP6-22B/7F	●	2

★ Momentary Flush Pushbutton-(Non illuminated)(Latching)

NP6-□□ BS/ □ J	Model	Color	⌞┘
	NP6-11BS/1J	○	1
	NP6-11BS/2J	●	1
	NP6-11BS/3J	●	1
	NP6-11BS/4J	●	1
	NP6-11BS/5J	●	1
	NP6-11BS/6J	●	1
	NP6-11BS/7J	●	1
	NP6-22BS/1J	○	2
	NP6-22BS/2J	●	2
	NP6-22BS/3J	●	2
	NP6-22BS/4J	●	2
	NP6-22BS/5J	●	2
	NP6-22BS/6J	●	2
	NP6-22BS/7J	●	2

«Электро-Профи» - www.ep.ru

NP6-□□ BS/ □ F	Model	Color	⌞┘
 	NP6-11BS/1F	○	1
	NP6-11BS/2F	●	1
	NP6-11BS/3F	●	1
	NP6-11BS/4F	●	1
	NP6-11BS/5F	●	1
	NP6-11BS/6F	●	1
	NP6-11BS/7F	●	1
	NP6-22BS/1F	○	2
	NP6-22BS/2F	●	2
	NP6-22BS/3F	●	2
	NP6-22BS/4F	●	2
	NP6-22BS/5F	●	2
	NP6-22BS/6F	●	2
	NP6-22BS/7F	●	2

NP6-□□ BS/ □ Y	Model	Color	⌞┘
 	NP6-11BS/1Y	○	1
	NP6-11BS/2Y	●	1
	NP6-11BS/3Y	●	1
	NP6-11BS/4Y	●	1
	NP6-11BS/5Y	●	1
	NP6-11BS/6Y	●	1
	NP6-11BS/7Y	●	1
	NP6-22BS/1Y	○	2
	NP6-22BS/2Y	●	2
	NP6-22BS/3Y	●	2
	NP6-22BS/4Y	●	2
	NP6-22BS/5Y	●	2
	NP6-22BS/6Y	●	2
	NP6-22BS/7Y	●	2

Dimensions (mm)

NP6-□□B□/□J

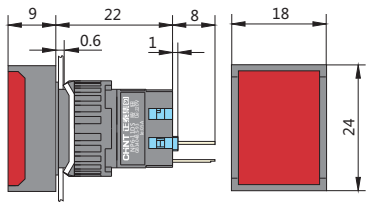

NP6- □□B□/□F

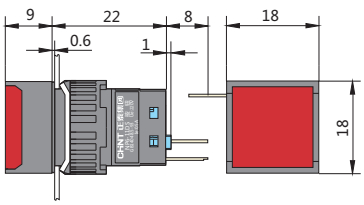

NP6-□□B□ /□Y

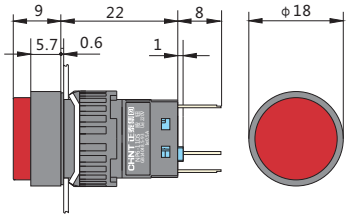

★ Momentary Flush Pushbutton-(Illuminated) (AC 6V,12V,24V)

NP6-□□ D/ □ J	Model	Color	⌞┘
  Rectangle 5PINS	NP6-11D/1J	○	1
	NP6-11D/3J	●	1
	NP6-11D/4J	●	1
	NP6-11D/5J	●	1
	NP6-11D/6J	●	1
	NP6-11D/7J	●	1
	NP6-22D/1J	○	2
	NP6-22D/3J	●	2
	NP6-22D/4J	●	2
	NP6-22D/5J	●	2
	NP6-22D/6J	●	2
	NP6-22D/7J	●	2

★ Momentary Flush Pushbutton-(Illuminated) (AC 6V,12V,24V , Latching)

NP6-□□ DS/ □ J	Model	Color	⌞┘
  Rectangle 5PINS	NP6-11DS/1J	○	1
	NP6-11DS/3J	●	1
	NP6-11DS/4J	●	1
	NP6-11DS/5J	●	1
	NP6-11DS/6J	●	1
	NP6-11DS/7J	●	1
	NP6-22DS/1J	○	2
	NP6-22DS/3J	●	2
	NP6-22DS/4J	●	2
	NP6-22DS/5J	●	2
	NP6-22DS/6J	●	2
	NP6-22DS/7J	●	2

E

«Электро-Профи» - www.ep.ru

NP6-□□ D/ □ F	Model	Color	
	NP6-11D/1F	○	1
	NP6-11D/3F	●	1
	NP6-11D/4F	●	1
	NP6-11D/5F	●	1
	NP6-11D/6F	●	1
	NP6-11D/7F	●	1
	NP6-22D/1F	○	2
	NP6-22D/3F	●	2
	NP6-22D/4F	●	2
	NP6-22D/5F	●	2
	NP6-22D/6F	●	2
	NP6-22D/7F	●	2

NP6-□□ DS/ □ F	Model	Color	
	NP6-11DS/1F	○	1
	NP6-11DS/3F	●	1
	NP6-11DS/4F	●	1
	NP6-11DS/5F	●	1
	NP6-11DS/6F	●	1
	NP6-11DS/7F	●	1
	NP6-22DS/1F	○	2
	NP6-22DS/3F	●	2
	NP6-22DS/4F	●	2
	NP6-22DS/5F	●	2
	NP6-22DS/6F	●	2
	NP6-22DS/7F	●	2

NP6-□□ D/ □ Y	Model	Color	
	NP6-11D/1Y	○	1
	NP6-11D/3Y	●	1
	NP6-11D/4Y	●	1
	NP6-11D/5Y	●	1
	NP6-11D/6Y	●	1
	NP6-11D/7Y	●	1
	NP6-22D/1Y	○	2
	NP6-22D/3Y	●	2
	NP6-22D/4Y	●	2
	NP6-22D/5Y	●	2
Round 5PINS	NP6-22D/6Y	●	2
	NP6-22D/7Y	●	2

NP6-□□ DS/ □ Y	Model	Color	
	NP6-11DS/1F	○	1
	NP6-11DS/3F	●	1
	NP6-11DS/4F	●	1
	NP6-11DS/5F	●	1
	NP6-11DS/6F	●	1
	NP6-11DS/7F	●	1
	NP6-22DS/1F	○	2
	NP6-22DS/3F	●	2
	NP6-22DS/4F	●	2
	NP6-22DS/5F	●	2
Round 5PINS	NP6-22DS/6F	●	2
	NP6-22DS/7F	●	2

Dimensions (mm)

NP6-□□D□/□J

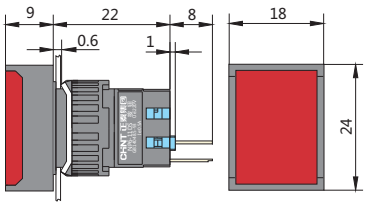

NP6- □□D□/□F

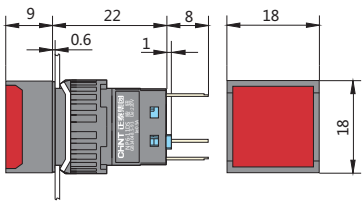

NP6-□□D□ /□Y

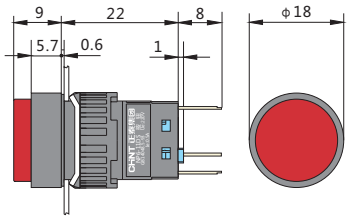

★ Mushroom Pushbutton(Non illuminated)

NP6-□□J/ □	Model	Color	
	NP6-11J/3	●	1
	NP6-11J/4	●	1
	NP6-11J/5	●	1
	NP6-22J/3	●	2
	NP6-22J/4	●	2
	NP6-22J/5	●	2

★ Selector Switches (Non illuminated)

NP6-□□ X/ □ Y	Model	Selector Switches	
	NP6-11X/2Y		1
	NP6-22X/2Y		2
	NP6-22X/3Y		2

«Электро-Профи» - www.ep.ru

★ Mushroom Pushbutton-(Non illuminated)-(Latching)

NP6-□□ ZS/4	Model	Color	
	NP6-11ZS/4	●	1
	NP6-22ZS/4	●	2

★ Indicator

NP6-XD/ □□	Model	Color	Voltage
	NP6-XD/1J	○	DC 6V, DC 12V, DC 24V
	NP6-XD/3J	●	
	NP6-XD/4J	●	
	NP6-XD/5J	●	
	NP6-XD/6J	●	
	NP6-XD/7J	●	
	NP6-XD/1F	○	DC 6V, DC 12V, DC 24V
	NP6-XD/3F	●	
	NP6-XD/4F	●	
	NP6-XD/5F	●	
	NP6-XD/6F	●	
	NP6-XD/7F	●	
	NP6-XD/1Y	○	DC 6V, DC 12V, DC 24V
	NP6-XD/3Y	●	
	NP6-XD/4Y	●	
	NP6-XD/5Y	●	
	NP6-XD/6Y	●	
	NP6-XD/7Y	●	

★ Key Switches(Non illuminated)

NP6-□□ Y/ □ F	Model	Selector Switches	
	NP6-11Y/2F		1
	NP6-22Y/2F	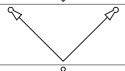	2
	NP6-22Y/3F	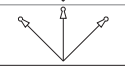	2

Dimensions (mm)

NP6-□□Y/□F

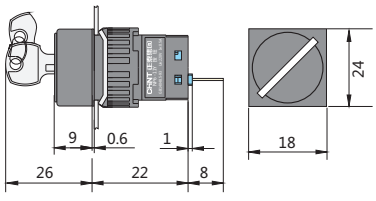

Dimensions (mm)

NP6-□□X/□Y

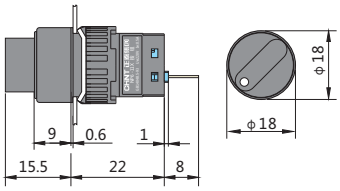

★ Key Switches(Non illuminated)

NP6-□□ Y/ □ Y	Model	Selector Switches	
	NP6-11Y/2Y		1
	NP6-22Y/2Y		2
	NP6-22Y/3Y	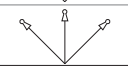	2

Dimensions (mm)

NP6-□□Y/□Y

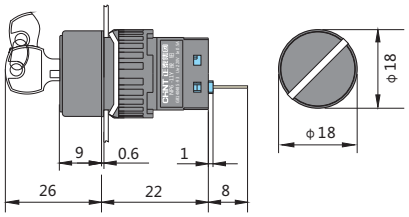

★ Key Switches(Non illuminated)

NP6-□□ Y/ □ J	Model	Selector Switches	
	NP6-11Y/2J		1
	NP6-22Y/2J		2
	NP6-22Y/3J	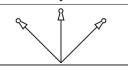	2

Dimensions (mm)

NP6-□□Y/□J

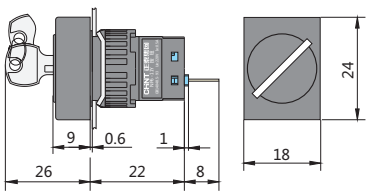

E

«Электро-Профи» - www.ep.ru



NP3 Series

1. General

Electric ratings: AC50/60Hz, AC380V/DC220V
Degree of protection: IP65
andard: IEC/EN60947-5-1

2. Operating conditions

2.1 Ambient temperature is -5℃~+40℃, the average temperature during 24 hours couldn't exceed +35℃.

2.2 Altitude: ≤2000m.

2.3 Atmosphere condition: Relative humidity of the atmosphere couldn't exceed 50% when the highest temperature is +40℃; much higher relative humidity is allowable under the condition of lower temperature, for example, when the temperature reaches +20℃, the relatice humidity is up to 90%. As for dews, which contingently appear due to change of temperature, special steps should be taken.

2.4 Pollution degree: 3

2.5 Overvoltage category: Ⅱ

3. Feature

With good capability of dust-proof and rain-proof application; ensures reliable operation of circuit and equipments.

4. Technical data

4.1 Rated insulation voltage Ui : 380V
4.2 Conventional thermal current Ith: 10A

Rated operational voltage Ue (V)		380	220	110
Rated operational	AC-15	2.5	4.5	-
current Ie (A)	DC-13	-	0.3	0.6

4.3 Durability
Electric life: instantaneous: AC 5×10^5 operation circles,
DC 2×10^5 operation circles;
other type: 1×10^5 operation circles;
Mechanical life: instantaneous:
1×106 operation circles,
Illuminated button: 3×10^5 operation circles;
other type: 1×10^5 operation circles;

4.4 Contact
Contact resistance≤50mΩ (initial value)

4.5 Short-circuit protective device: NT00-16 16A



NP3

E-038



NP3-□A
with power on & off
(mechanical interlock)

E-038



NP3-□B
with power on & off
(electrical interlock)

E-041



NP3-□K
with starting and
emergency stop button

E-041

«Электро-Профи» - www.ep.ru

5. NP3 series indicator

★ Momentary Flush button

NP3 □	Model	Function
	NP3-1	UP/DOWN
	NP3-2	UP/DOWN, LEFT/RIGHT
	NP3-3	UP/DOWN, LEFT/RIGHT, FRONT/BACT
	NP3-4	UP/DOWN, LEFT/RIGHT, FRONT/BACT,Anti-clockwise/Clockwisw
	NP3-5	UP/DOWN, LEFT/RIGHT, FRONT/BACT, Anti-clockwise/Clockwisw, FAST/SLOW

★ Momentary Flush button With Power Switching
("start" button Maintained)

NP3 □ A	Model	Function
	NP3-1A	ON/OFF, UP/DOWN
	NP3-2A	ON/OFF, UP/DOWN, LEFT/RIGHT
	NP3-3A	ON/OFF, UP/DOWN, LEFT/RIGHT, FRONT/BACK
	NP3-4A	UP/DOWN, LEFT/RIGHT, FRONT/BACT,Anti-clockwise/Clockwisw

E

«Электро-Профи» - www.ep.ru

Dimension (mm)

NP3-1

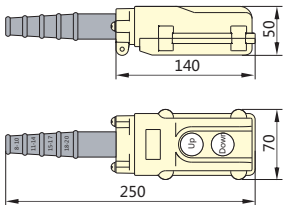

NP3-2

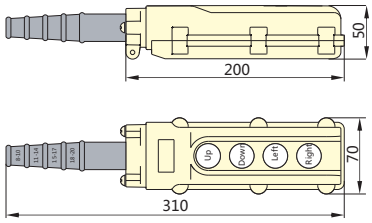

NP3-3

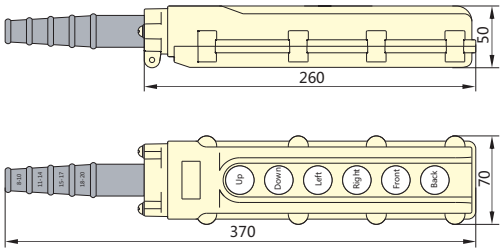

NP3-4

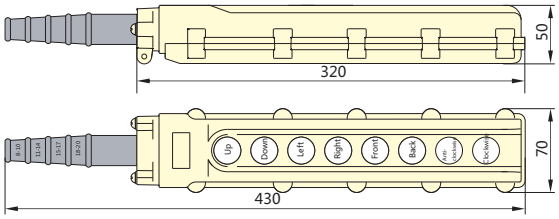

NP3-5

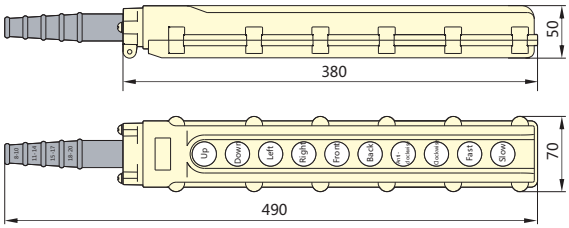

NP3-1A

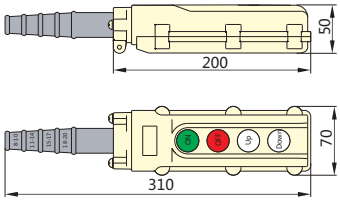

NP3-2A

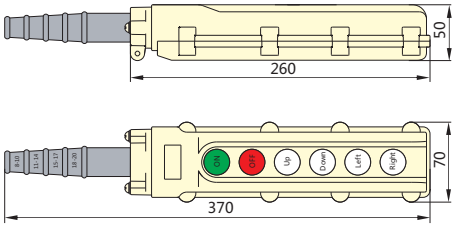

NP3-3A

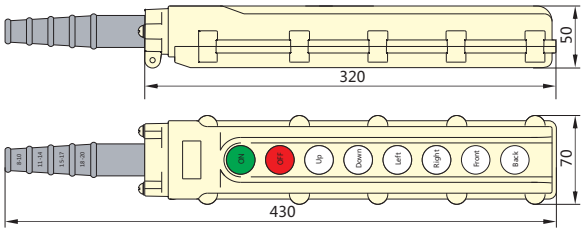

NP3-4A

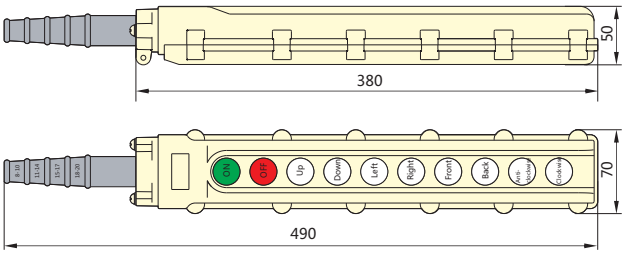

NP3-1B

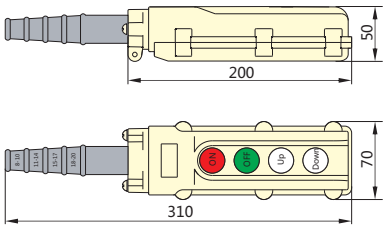

NP3-2B

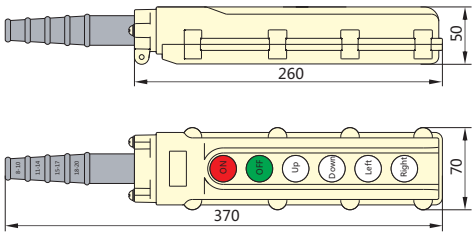

NP3-3B

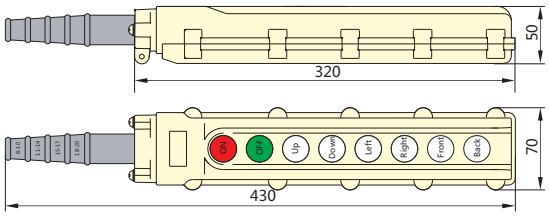

NP3-4B

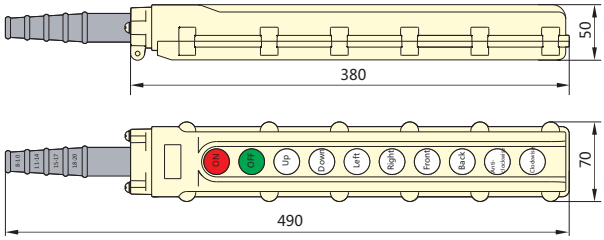

E

★ Momentary Flush button With Power Switching

NP3 □ B	Model	Function
	NP3-1B	START, STOP , UP/DOWN
	NP3-2B	START, STOP , UP/DOWN, LEFT/RIGHT
	NP3-3B	START, STOP , UP/DOWN, LEFT/RIGHT, FRONT/BACK
	NP3-4B	START, STOP , UP/DOWN, LEFT/RIGHT, FRONT/BAC, Anti-Clockwise

★ Momentary Flush button With Power Switching ("start" button Maintained)

NP3 □ K	Model	Function
	NP3-1K	START, UP/DOWN
	NP3-2K	START, UP/DOWN, LEFT/RIGHT
	NP3-3K	START, UP/DOWN, LEFT/RIGHT, FRONT/BACK
	NP3-4K	START, UP/DOWN, LEFT/RIGHT, FRONT/BAC, Anti-Clockwise

★The electrical appliance diagrams of NP3

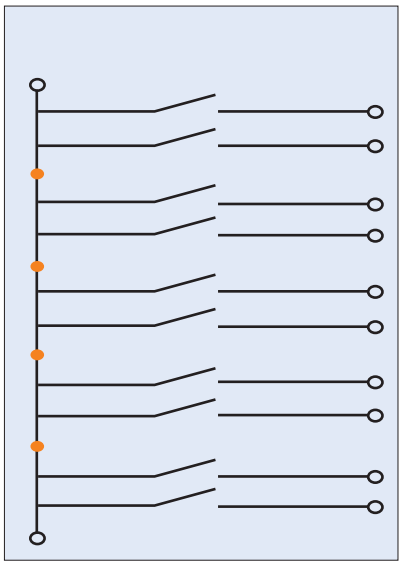

NP3-□	NP3-□ A
UP	ON
DOWN	OFF
LEFT	UP
RIGHT	DOWN
FRONT	LEFT
BACK	RIGHT
Anti-clockwise	FRONT
Clockwise	BACK
FAST	Anti-clockwise
SLOW	Clockwise

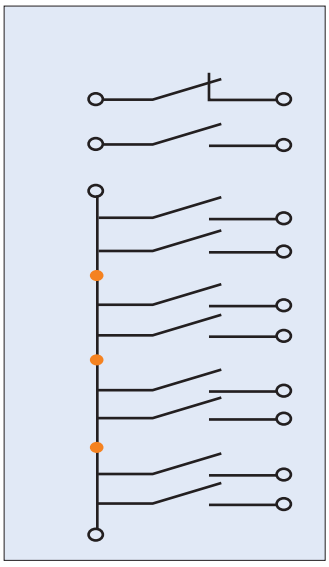

NP3-□B	NP3-□K
STOP	
START	START
UP	UP
DOWN	DOWN
LEFT	LEFT
RIGHT	RIGHT
FRONT	FRONT
BACK	BACK
Anti-clockwise	
Clockwise	Clockwise

«Электро-Профи» - www.ep.ru



NPH1 Pushbutton Box

1. General

Electric ratings: AC50/60Hz, AC415V/DC250V;
Degree of protection: IP65
Standard: IEC/EN60947-5-1

2. Operating conditions

2.1 Ambient temperature is -5℃~+40℃, the average temperature during 24 hours couldn't exceed +35℃.

2.2 Altitude: ≤2000m.

2.3 Atmosphere condition: Relative humidity of the atmosphere couldn't exceed 50% when the highest temperature is +40℃; much higher relative humidity is allowable under the condition of lower temperature, for example, when the temperature reaches +20℃, the relative humidity is up to 90%. As for dews, which contingently appear due to change of temperature, special steps should be taken.

2.4 Pollution grade: 3

2.5 Installation category: Ⅱ

2.6 Tightening torque is 0.8~1.2N·m for the cable terminals. Cross section of the cable connection is 0.5~2.5mm2, and 8mm conductor length is needed.

3. Technical data

3.1 Conventional heating current Ith: 10A

3.2 Refer to table below, for ratings under different utilization categories.

AC-15	Rated operational voltage, V	415	240	120
	Rated operational current, V	1.9	3	6
DC-13	Rated operational voltage, V	250	125	-
	Rated operational current, V	0.27	0.55	-

Life
Electric life: Flush-headed and mushroom-headed type:
AC 5×10^5 operations, DC2.5×10^5 operations;
other type: 1×10^5 operations;
Mechanical life: flush-headed and mushroom-headed type:
1 million operations,
button with light: 3×10^6 operations;
other type: 1×10^5 operations

Rated operational voltage	Rated operational current
AC/DC 6V, 12V, 24V, 36V	≤20mA
AC 110V~230V	≤20mA

3.3 Short-circuit protective device: NT00-16 16A

Dimension (mm)

Enclosure with one hole

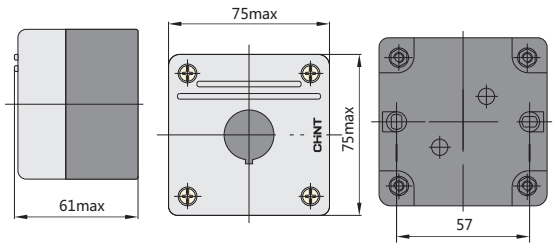

4. NPH1 Enclosure

Enclosure with one hole

	Model	Specifications	
		Color	Protection degree
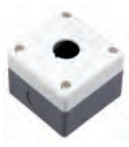	NPH1-10J	●	IP65
	NPH1-10	●	IP65

Enclosure with two hole

	Model	Specifications	
		Color	Protection degree
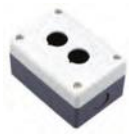	NPH1-20J	●	IP65
		●	IP65

Enclosure with three hole

	Model	Specifications	
		Color	Protection degree
	NPH1-30J	●	IP65
		●	IP65

«Электро-Профи» - www.ep.ru

Dimension (mm)

Enclosure with two hole

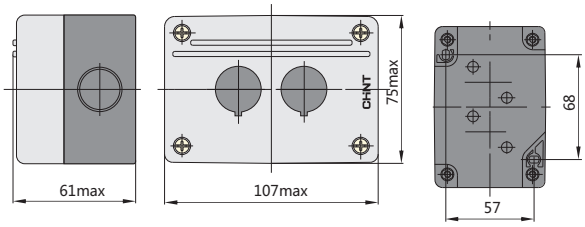

Box with one hole (with flush button)



Model	Specifications		
			Color
NPH1-1001	1	—	●
NPH1-1002	1	—	● |
NPH1-1003	—	1	●
NPH1-1004	—	1	● ○

Box with one hole (with mushroom-headed button)



Model	Specifications			
				Color
NPH1-1005	ϕ40	1	—	●
NPH1-1006	ϕ40	—	1	●

Box with one hole (with selector switch)



Model	Specifications			
	Type of positions			Color
NPH1-1007		1	—	●
NPH1-1008		2	—	●

Box with one hole (with mushroom-headed button,self-locking)



Model	Specifications			
				Color
NPH1-1009	ϕ40	—	1	●
NPH1-1010	ϕ60	—	1	●

Enclosure with three hole

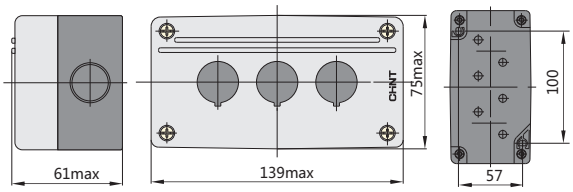

Dimension (mm)

NPH1-1001~1004

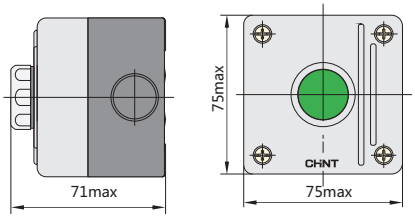

Dimension (mm)

NPH1-1005~1006

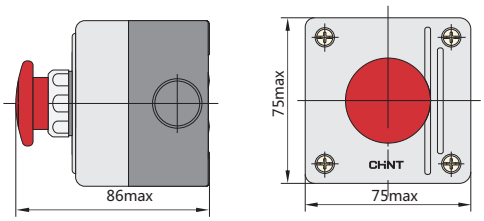

Dimension (mm)

NPH1-1007~1008

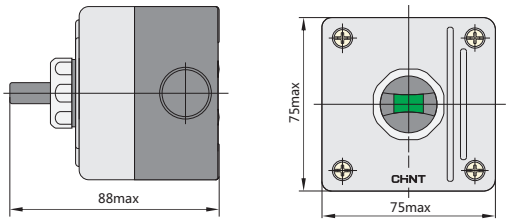

Dimension (mm)

NPH1-1009~1010

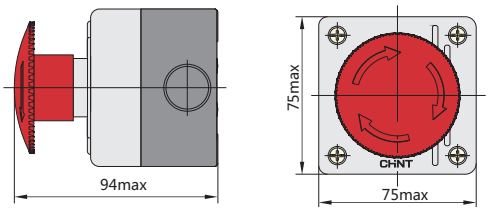

«Электро-Профи» - www.ep.ru

Box with one hole (with key switch)

	Model	Specifications		
		Type of positions		
	NPH1-1011		—	1

Box with two holes (with flush button)

	Model	Specifications		
				Color
	NPH1-2001	1	—	●
		—	1	●
	NPH1-2002	1	—	● I
		—	1	● ○
	NPH1-2003	1	—	○ ←
		—	1	● →
	NPH1-2004	1	—	○ ↑
		—	1	● ↓

Box with three holes (with flush button)

	Model	Specifications			
					Color
	NPH1-3001	1			●
		—	1		●
		1	—		●
	NPH1-3002	1	—		● I
		—	1		● ○
		1	—		● II
	NPH1-3003	1	—		○ ←
		—	1		● ○
		1	—		● →
	NPH1-3004	1	—		○ ↑
		—	1		● ○
		1	—		● ↓

Dimension (mm)

NPH1-3001~3004

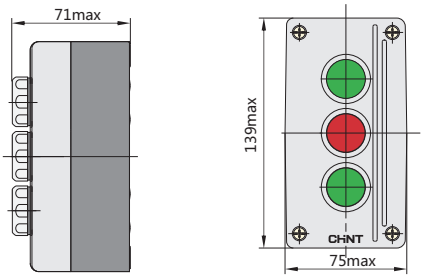

Dimension (mm)

NPH1-1011

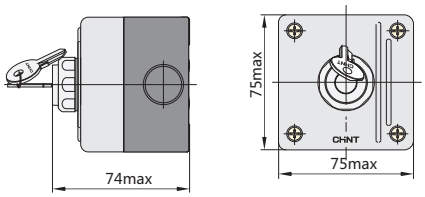

Dimension (mm)

NPH1-2001~2004

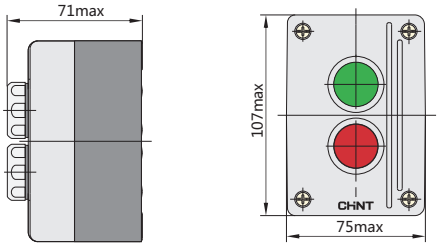

	Model	Specifications			
					Color
	NPH1-3005	1			●
			1NC		●
		Indicator light		AC/DC 24V	●
	NPH1-3006	1			● I
			1		● ○
		Indicator light		AC/DC 24V	●

NPH1-3005~3006

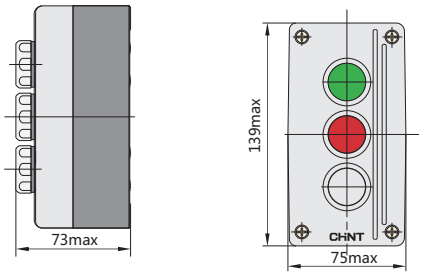

E

«Электро-Профи» - www.ep.ru



ND16 Indicator Light

1. General

Degree of protection: IP65,IP40,IP20(Buzzer);
Standard: IEC/EN60947-5-1

2. Operating conditions

2.1 Ambient temperature is -5℃~+40℃, the average temperature during 24 hours couldn't exceed +35℃.

2.2 Altitude: ≤2000m.

2.3 Atmosphere condition:
Relative humidity of the atmosphere couldn't exceed 50% when the highest temperature is +40℃; much higher relative humidity is allowable under the condition of lower temperature, for example, when the temperature reaches +20℃, the relative humidity is up to 90%. As for dews, which contingently appear due to change of temperature, special steps should be taken.

2.4 Pollution degree: 3

2.5 Overvoltage category: Ⅲ

2.6 Tightening torque is 0.8~1.2N·m for the cable terminals, and 1.5~1.8N·m for the fixing nut. Cross section of the cable connection is 0.5~2.5mm^2, and 8mm conductor length is eeded.



ND16-22A	ND16-22AS	ND16-22B	ND16-22BS	ND16-22C	ND16-22CS	ND16-22D	ND16-22DS	ND16-22F, ND16-22FS ND16-22L,ND16-22LC	ND16-22BK
E-046	E-046	E-047	E-047	E-047~E-048	E-047~E-048	E-048	E-048	E-050	E-049

3. Technical data

Basic parameters

Rated operational voltage Ue (V)		Rated operational current (mA)	Service life (h)	Brightness (cd/m^2)	Basic color
AC	AC/DC				
400	6	Ie≤20	≥30000	≥40 ≥20(BUZZER)	🔴
230	12				🟢
110	24				🟡
-	36				🔵
-	48				⚪
-	110				🟠
-	230				
-	400				

Note: For AC power supply, the limit voltage range is 0.85Ue~1.1Ue between terminals;C:IP65; K2:anti-interference

«Электро-Профи» - www.ep.ru

4. ND16 series indicator

★ Flat Platform-Lampshape (Resistance type)

ND16-22A/2	Lamp-Voltage	Model	Color
	LED AC/DC 6V, AC/DC 12V, AC/DC 24V, AC/DC 36V, AC/DC 48V, AC/DC 110V, AC/DC 230V, AC/DC 400V	ND16-22A/2 ND16-22A/2K2	(W) (G) (R) (Y) (B) (O)

★ Flat Platform-Lampshape (Resistance type)

ND16-22AS/2	Lamp-Voltage	Model	Color
	LED AC/DC 6V, AC/DC 12V, AC/DC 24V, AC/DC 36V, AC/DC 48V,	ND16-22AS/2	(W) (G) (R) (Y) (B) (O)

★ Flat Platform-Lampshape (Capacitor type)

ND16-22A/4	Lamp-Voltage	Model	Color
	LED AC 110V, AC 230V, AC 400V	ND16-22A/4 ND16-22A/4K2	(W) (G) (R) (Y) (B) (O)

★ Flat Platform-Lampshape (Capacitor type)

ND16-22AS/4	Lamp-Voltage	Model	Color
	LED AC 110V, AC 230V, AC 400V	ND16-22AS/4	(W) (G) (R) (Y) (B) (O)

Dimensions (mm)

ND16-22A/□

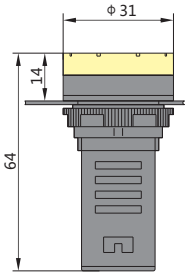

Dimensions (mm)

ND16-22AS/□

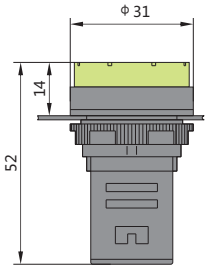

E

«Электро-Профи» - www.ep.ru

★ Flat Round Platform-Lampshape (Resistance type)

ND16-22B/2	Lamp-Voltage	Model	Color
	LED AC/DC 6V, AC/DC12V, AC/DC24V, AC/DC36V, AC/DC48V, AC/DC110V, AC/DC230V, AC/DC400V	ND16-22B/2 ND16-22B/2K2 ND16-22B/2C	(W) (G) (R) (Y) (B) (O)

★ Compacted Flat Round Platform-Lampshape (Resistance type)

ND16-22BS/2	Lamp-Voltage	Model	Color
	LED AC/DC 6V, AC/DC12V, AC/DC 24V, AC/DC36V, AC/DC48V	ND16-22BS/2 ND16-22BS/2C	(W) (G) (R) (Y) (B) (O)

★ Flat Round Platform-Lampshape (Capacitance type)

ND16-22B/4	Lamp-Voltage	Model	Color
	LED AC 110V, AC 230V, AC 400V	ND16-22B/4 ND16-22B/4K2 ND16-22B/4C	(W) (G) (R) (Y) (B) (O)

★ Compacted Flat Round Platform-Lampshape (Capacitance type)

ND16-22BS/4	Lamp-Voltage	Model	Color
	LED AC 110V, AC 230V, AC 400V	ND16-22BS/4 ND16-22BS/4C	(W) (G) (R) (Y) (B) (O)

Dimensions (mm)

ND16-22B/□

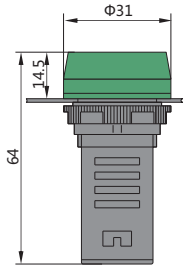

Dimensions (mm)

ND16-22BS/□

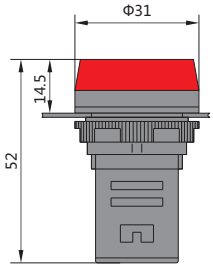

★ Arc Surface ripple-Lampshape (Resistance type)

ND16-22C/2	Lamp-Voltage	Model	Color
	LED AC/DC 6V, AC/DC12V, AC/DC24V, AC/DC36V, AC/DC48V, AC/DC110V, AC/DC230V, AC/DC400V	ND16-22C/2 ND16-22C/2K2	(W) (G) (R) (Y) (B) (O)

★ Compacted Arc Surface ripple-Lampshape (Resistance type)

ND16-22CS/2	Lamp-Voltage	Model	Color
	LED AC/DC 6V, AC/DC12V, AC/DC24V, AC/DC36V, AC/DC48V,	ND16-22CS/2	(W) (G) (R) (Y) (B) (O)

«Электро-Профи» - www.ep.ru

★ Arc Surface ripple-Lampshape (Capacitance type)

ND16-22C/4	Lamp-Voltage	Model	Color
	LED AC 110V, AC230V, AC 400V	ND16-22C/4 ND16-22C/4K2	○ (W) ● (G) ● (R) ● (Y) ● (B) ● (O)

Dimensions (mm)

ND16-22C/□

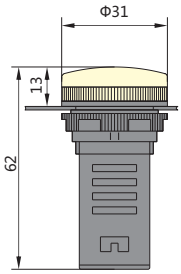

★ Compacted Arc Surface ripple-Lampshape (Capacitance type)

ND16-22CS/4	Lamp-Voltage	Model	Color
	LED AC 110V, AC230V, AC 400V	ND16-22CS/4	○ (W) ● (G) ● (R) ● (Y) ● (B) ● (O)

Dimensions (mm)

ND16-22CS/□

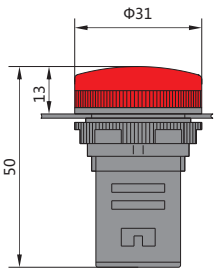

★ Arc Surface Round-Lampshape (Resistance type)

ND16-22D/2	Lamp-Voltage	Model	Color
	LED: AC/DC 6V, AC/DC12V, AC/DC24V, AC/DC36V, AC/DC48V, AC/DC110V, AC/DC230V, AC/DC400V	ND16-22D/2 ND16-22D/2K2 ND16-22D/2C	○ (W) ● (G) ● (R) ● (Y) ● (B) ● (O)

★ Compacted Arc Surface Round-Lampshape (Resistance type)

ND16-22DS/2	Lamp-Voltage	Model	Color
	LED: AC/DC 6V, AC/DC12V, AC/DC24V, AC/DC36V, AC/DC48V	ND16-22DS/2 ND16-22DS/2C	○ (W) ● (G) ● (R) ● (Y) ● (B) ● (O)

★ Arc Surface Round-Lampshape (Capacitance type)

ND16-22D/4	Lamp-Voltage	Model	Color
	LED AC 110V, AC230V, AC 400V	ND16-22D/4 ND16-22D/4K2 ND16-22D/4C	○ (W) ● (G) ● (R) ● (Y) ● (B) ● (O)

★ Compacted Arc Surface Round-Lampshape (Capacitance type)

ND16-22DS/4	Lamp-Voltage	Model	Color
	LED AC 110V, AC 230V, AC 400V	ND16-22DS/4 ND16-22DS/4C	○ (W) ● (G) ● (R) ● (Y) ● (B) ● (O)

E

«Электро-Профи» - www.ep.ru

Dimensions (mm)

ND16-22D/□

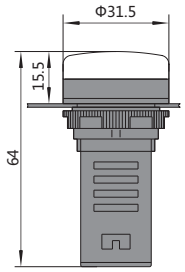

Dimensions (mm)

ND16-22DS/□

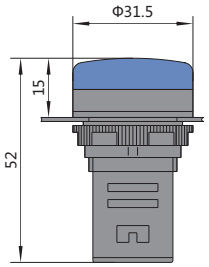

★ Fast connection type (Resistance type)

ND16-22BK/2	Lamp-Voltage	Model	Color
	LED: AC/DC 6V, AC/DC12V, AC/DC24V, AC/DC36V, AC/DC48V, AC/DC110V, AC/DC230V, AC/DC400V	ND16-22BK/2	(W) (G) (R) (Y) (B) (O)

★ Fast connection type (Capacitance type)

ND16-22BK/4	Lamp-Voltage	Model	Color
	LED: AC 110V, AC 230V, AC 400V,	ND16-22BK/4	(W) (G) (R) (Y) (B) (O)

Dimensions (mm)

ND16-22BK/□

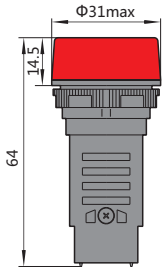

«Электро-Профи» - www.ep.ru

★ Interrupted type

ND16 Buzzer	Model	Color	Voltage
	ND16-22F	● ●	AC/DC 24V AC/DC 36V AC/DC 48V AC/DC 110V, AC230V, AC400V

★ Interrupted & flush type

ND16 Buzzer	Model	Color	Voltage
	ND16-22FS	●	AC/DC 24V AC/DC 36V AC/DC 48V AC/DC 110V, AC230V, AC400V

★ Continuous type

ND16 Buzzer	Model	Color	Voltage
	ND16-22L	● ●	AC/DC 24V AC/DC 36V AC/DC 48V AC/DC 110V, AC230V, AC400V

★ Continuous & lit type

ND16 Buzzer	Model	Color	Voltage
	ND16-22LC	●	AC/DC 24V AC/DC 36V AC/DC 48V AC/DC 110V, AC230V, AC400V

Dimension (mm)

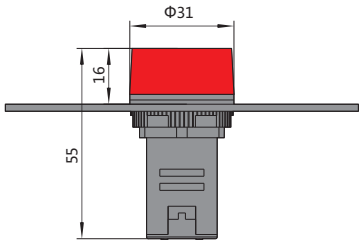

ND16-22F
ND16-22FS
ND16-22L
ND16-22LC

E

«Электро-Профи» - www.ep.ru

Inverter& Soft-Starter

Energy Saving and Efficiency Improving



«Электро-Профи» - www.ep.ru



«Электро-Профи» - www.ep.ru

Inverter & Soft-Starter

Inverter



NVF2G
Inverter

Page P-001



NVF300M
Inverter

Page P-012



NVF3
Inverter

Page P-017

Soft-Starter



NJR2-T
Soft-Starter

Page P-027



NJR2-D
Soft-Starter

Page P-032



NJR2-ZX
On-line Soft-Starter

Page P-037

«Электро-Профи» - www.ep.ru



NVF2G Inverter

1. General

NVF2G-series inverters are high-efficiency open-loop vector inverter researched and developed independently by our company. It has the features of high starting torque (0.5 Hz, 1.5 times of rated torque), strong overload capacity, flexible and convenient operation and forward PID and reverses PID, etc.This series of inverter can be divided into mini type, general type (heavy load) and fan and water pump type (light load), with the functions of strong load adaptability, stable and reliable operation and automatic energy-saving operation, etc. This product can be widely applied to electric drive field and automation control field, such as papermaking, textile, water supply, municipal administration, food, cement, chemical industry, printing and dyeing, metallurgy, mine and plastic machinery.

Applicable equipment of the product

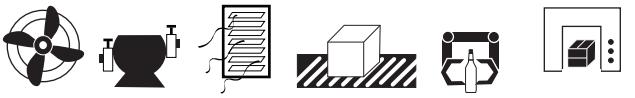

Draught fan | Pump | Air conditioning | Conveyor belt | Food machinery | Packaging machinery

2. Product features

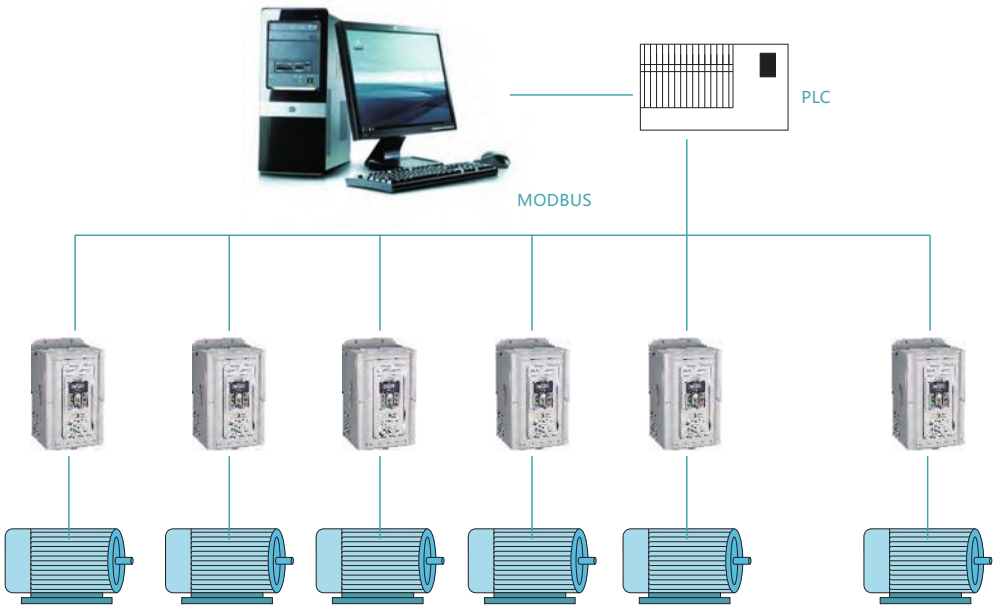

«Электро-Профи» - www.ep.ru

2.1 Excellent motor drive and control performance

- High starting torque: 0.5 Hz, 150% of rated motor torque;
- Superior energy-saving effect: the motor load more lighter more efficiency; Improve the operation efficiency of the motor through energy-saving control; the motor still operates under high-efficiency status regardless of the changes of load;
- Accurate auto tuning function: it can accurately conduct overall and static auto tuning of motor parameters with convenient debugging and simple operation, which can improve the control accuracy and response speed;
- Speed tracking: during the restarting after recovery from the momentary power interruption, it can judge the rotate direction and speed of motor and continue to operate smoothly;
- External DC electric reactor (over 110 kW) can effectively restrain higher harmonic.
- The exclusive dead time compensation technology can increase the output torque;
- Wide carrier frequency: (1-15) kHz, can effectively reduce the operation noise of motor;
- Ultra-strong overload capacity -- Maintain 1 min under 150% of rated current; in heavy load, it is uneasy frequently to trip overload protection and ensures the continuous and stable operation of the equipment;
- Real-time load monitoring -- Real-time monitoring of bus bar voltage and motor current to ensure stable start and stop and quick tracking.

2.2 High reliability design

- Design of the scope of universal input voltage: The fluctuation range of input voltage can reach up to ±15%;
- The function of input filtration can reduce harmonic interference effectively;
- The function of automatic voltage regulation (AVR) and automatic current limiting can make the system more stable;
- Perfect protection function and fault diagnosis system provide safe and reliable guarantee for the equipment.

2.3 Various application functions

- It adopts RS-485 communication interface and standard MODBUS communication protocol and can take networked automation control with external PLC equipment.
- It has wobble frequency, which is available for textile industry;
- The efficiently energy saving can be achieved by the built-in intelligent PID control and dormancy function;
- Simple PLC control: The inverter can operate in variable speed according to certain rule through simple PLC function; It not only can define one circular multistage frequency into the function code, but also can define the operation time, direction and number of cycles of the multistage frequency into the function code;
- Modular design: The NVF2G series inverter integrates the modular design that easy to be assembled and disassembled with the dismountable air heater and operation keyboard, which is easy for maintenance and usage;
- Design of common DC bus bar: Many inverters can be connected in parallel through common DC bus bar to share the feedback energy of braking, avoid overvoltage, stabilize the DC bus bar voltage of single inverter and make the equipment operate continuously and stably.

2.4 Ultra-strong environmental suitability:

- The inverter should be used at an ambient temperature of -10℃ to +40℃ and derated by 1% per 1℃ when over 40℃;
- The input range of wide voltage is the 15% fluctuation range of 380V, which is available for various civil and industrial power grid;
- Circuit board is processed with conformal coating to make it available for various complicated working conditions.

«Электро-Профи» - www.ep.ru

3. Various software functions

Speed tracking operation

Start with the speed of motor under coast stop
The motor under coast stop can be introduced to the set frequency automatically without the speed detector.

Frequency skip control

Skipping the special frequency to prevent the vibration of mechanical system
In order to prevent the vibration of mechanical system, it can automatically keep away from the resonance point when operating under the constant speed.

DC braking when starting

Make the motor under coast stop stopping and restarting again
Under coast stop, the motor will be automatically stopped by DC braking and re-started immediately when the rotate direction of the motor is uncertain.

Multistage speed operation

The program can be operated according to the set multistage speed
It can operate according to the frequency of internal storage based on the signal combination. Multistage speed control can be achieved through PLC, limit switch, etc.

Automatic voltage regulation (AVR)

Ensure the stable output voltage during the operation of inverter
During the voltage fluctuation of the power grid, the output voltage of invert will not change with it.

Energy-saving operation

Automatic operation with peak efficiency
Detect the load current and provide the motor with the peak efficiency voltage according to the load and rotate speed to achieve the most efficient energy saving operation.

Automatic current limiting

Automatically limit the output current to prevent frequent overcurrent
When the load fluctuation exceeds the current limit level, it will make automatic regulation to maintain the current within the allowed range.

Failure record

Storage the fault information automatically
When there is fault alarm, it will automatically record the current and voltage and fault type to provide reference for determining the fault cause.

Torque limit

It will protect the machinery to ensure the reliable operation of machinery and equipment
It is helpful to protect the machinery by controlling the torque generated by the motor within the set value.

Dormancy control of water pump

To reduce the mechanical wear
When the water consumption at night is less and the output frequency of inverter is lower than the dormancy frequency, the inverter will enter into dormancy status.

Frequency detection

It is used to detect the frequency and is available for interlock of brake
When the output frequency is higher than the set value, it will output signal and is available for the interlock control of equipment.

PID control

Automatic process control
It will conduct PID calculation in the inverter and take the calculation result as the frequency instruction to quantitatively control the pressure, flow and air volume, etc.

«Электро-Профи» - www.ep.ru

Wobble frequency control

It is operated by swinging up and down by taking the set frequency as the center
Wobble frequency is available for textile, chemical fiber and other industries and occasions needing traversing and winding function.

Restraint of overvoltage

Prevent fault and tripping due to overvoltage
It is valid to punch and other operations that regenerated repeatedly due to the crank motion; According to the regeneration status, it will increase or decrease the operation frequency to restrain the overvoltage.

Fault restoration

To improve the reliability of continuous operation
Even if the inverter is detected for fault, it will reset automatically after auto-diagnosis to restart the operation without stopping the motor.
The number of automatic reset is 3.

Automatic torque boost

To increase the low-frequency output torque under V/F control mode
It is used for setting the manual/automatic torque boost setting under V/F control mode to effectively increase the low-frequency torque of inverter.

4. Main parameter and technical performance

4.1 NVF2G Inverter specifications

4.1.1 General type (T), fan and water pump type (P)

Input voltage class	380V				
Inverter power (kW)	1.5/PS4,1.5/TS4	2.2/PS4,2.2/TS4	3.7/PS4,3.7/TS4	5.5/PS4	5.5/TS4
Applicable motor power (kW)	1.5	2.2	3.7	5.5	5.5
Rated output current (A)	3.7	5	9	11	13

Input voltage class	3-phase	380V				
Inverter power (kW)	7.5/PS4,7.5/TS4	11/PS4	11/TS4	15/PS4,15/TS4	18.5/PS4,18.5/TS4	22/PS4,22/TS4
Applicable motor power (kW)	7.5	11	11	15	18.5	22
Rated output current (A)	17	22	25	32	37	45

Input voltage class	3-phase	380V				
Inverter power (kW)	30/PS4,30/TS4	37/PS4,37/TS4	45/PS4,45/TS4	55/PS4,55/TS4	75/PS4	75/TS4
Applicable motor power (kW)	30	37	45	55	75	75
Rated output current (A)	60	75	90	110	140	150

Input voltage class	3-phase	380V				
Inverter power (kW)	90/PS4,90/TS4	110/PS4,110/TS4	132/PS4,132/TS4	160/PS4,160/TS4	185/PS4,185/TS4	200/PS4,200/TS4
Applicable motor power (kW)	90	110	132	160	185	200
Rated output current (A)	176	210	253	300	340	380

Input voltage class	3-phase	380V				
Inverter power (kW)	220/PS4,220/TS4	245/PS4,245/TS4	280/PS4,280/TS4	315/PS4,315/TS4	355/PS4,355/TS4	400/PS4,400/TS4
Applicable motor power (kW)	220	245	280	315	355	400
Rated output current (A)	420	470	520	600	640	690

F

«Электро-Профи» - www.ep.ru

4.2 Standard technical features

Input and output features	Input voltage range: 380V/220V(±15%)
	Input frequency range: (47-63)Hz
	Output voltage range: 0- rated input voltage
	Output frequency range: General type: (0-400)Hz; Fan and water pump type: (0-120)Hz
Peripheral interface	Programmable digital input: Mini type: 5-route; General type, fan and water pump type: 6-route
	Programmable analog quantity input: AI1: (0-10)V input; AI2: (0-10)V or (0/4-20)mA; AI1 + AI2
	Open collector output: 1-route output
	Relay output: Mini type: 1-route output; General type, fan and water pump type: 2-route output
	Analogue output: For 2-route output, (0-10)V or (0/4-20)mA (mini type; 1-route) can be selected
Operation functions and features	Torque boost: Automatic torque boost; Manual torque boost of 0.1% - 30.0%
	Dynamic braking: Built-in or external brake unit, external connection with brake resistance
	DC braking: Start and stop are selectable separately; motion frequency (0-10)Hz, brake current (0-150)% , actuation time (0.0-50.0)s
	Jog control: Jog frequencyrange: (0-400)Hz, time for jog acceleration and deceleration (0.1-3600.0)s
	Multistage speed operation: Multistage speed operation can be achieved through the built-in simple PLC or controlling multi-function terminal.
	Automatic voltage regulation (AVR): When the network voltage changes, it can keep the output voltage stable automatically
	Automatic current limit: To automatically limit the current during the operation to prevent fault and tripping due to frequent overcurrent
	Built-in PID controller: It can constitute a closed-loop control system conveniently
	Self-defined JOG function key: The JOG key can be set as jog operation or switch from forward and reverse operation
	Protection functions: It can provide over 20 kinds of fault protection functions: overcurrent, overvoltage, undervoltage overheating, default phase, overload, PID disconnection and other protection functions,
Technical features	Control mode: Non-PG vector control, V/F control, torque control
	Overload capacity: Mini type and general type: 150% rated current for 1min; Fan and pump type: 120% rated current for 1 min
	Starting torque: Non-PG vector control: 0.5 Hz /150% (Rated torque)
	Speed regulation ratio: Non-PG vector control: 1: 100; V/F control: 1:50
	Speed control precision: (non-PG vector control): ±0.5% maximum speed
	Carrier frequency (1-15) kHz
Operation environment	Temperature: The inverter should be used at an ambient temperature of -10℃ to +40℃ and derated by 1% per 1℃ when it is over 40℃
	Humidity: Relative air humidity of the operation environment ≤ 90%, without moisture condensation
	Altitude: The inverter can achieve the rated power when installed below the altitude of 1000m. It should be derated by 10% per 1000m when over 1000m.
	Shock and vibration: The inverter should not be dropped to the ground or subjected to sudden shock. It should not be installed in places where vibration may occur.
	Electromagnetic radiation: The inverter should not be installed adjacent to electromagnetic radiation protection
	Air pollution: The inverter should not be installed in places with air pollution, such as dust or corrosive gas atmosphere
Structure	Protection degree: IP20
	Brake units Standard braking unit for model under 22 kw; standard braking unit for model equal to or above 22 kW
	Cooling mode: High-speed DC fan is used for the cooling of the whole NVF2G series inverter

«Электро-Профи» - www.ep.ru

5. Wiring diagram

5.1 Standard wiring diagram

5.1.1 Standard wiring diagram of general type and fan and water pump type

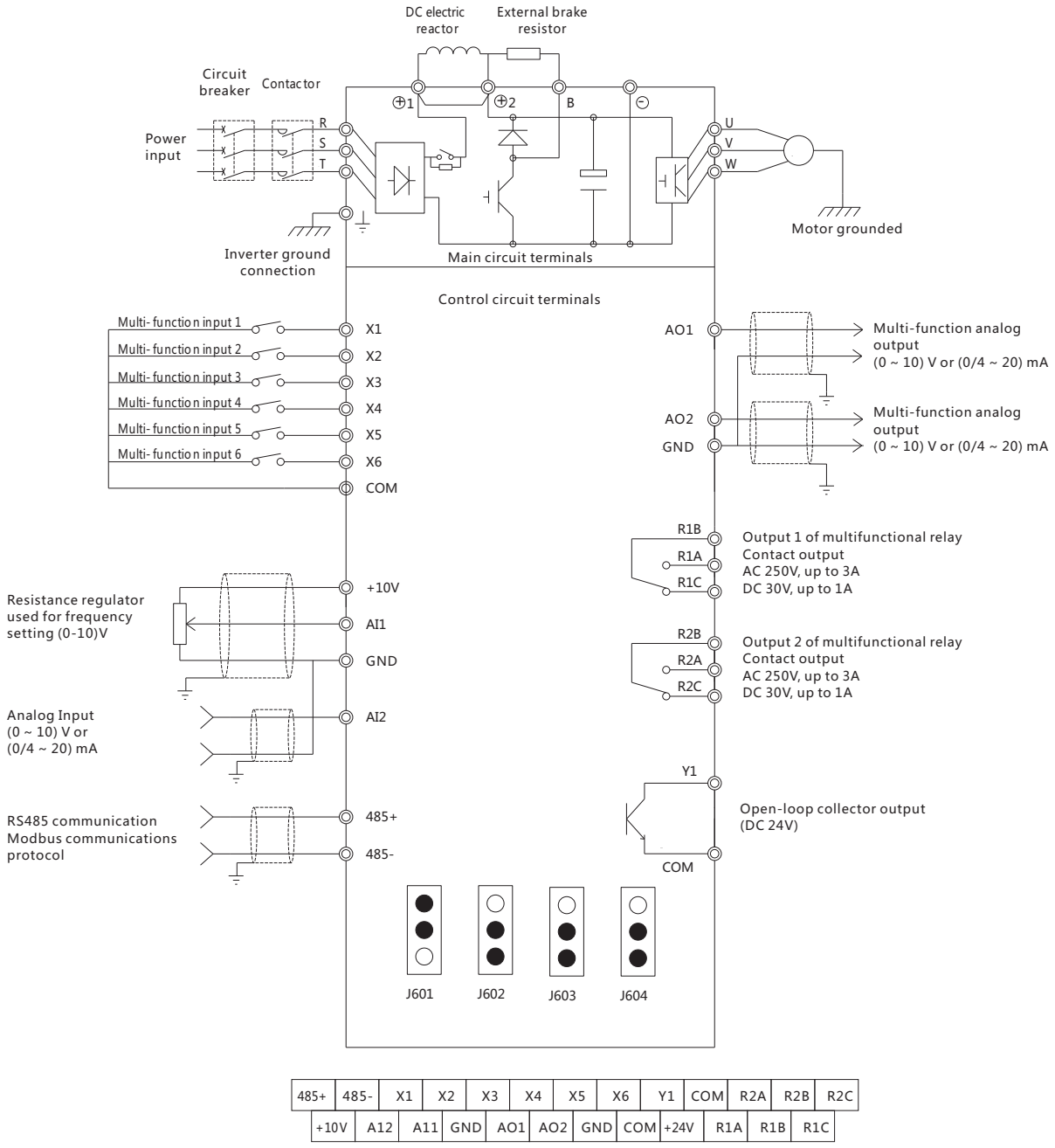

Arrangement of the corresponding control terminal

J601 position (AI1 interface):Connect Terminal 1 with Terminal 2:0V-10V analog voltage input of AI1;

Connect Terminal 2 with Terminal 3: input of the potentiometer on panel

J602 position (AI2 interface):Connect Terminal 1 with Terminal 2:0V-10V analog voltage input;

Connect Terminal 2 with Terminal 3: 0/4 mA-20 mA analog current input

J603 position (AO1 interface): Connect Terminal 1 with Terminal 2:0V-10V analog voltage output;

Connect Terminal 2 with Terminal 3: 0/4 mA-20 mA analog current output

J604 position (AO2 interface): Connect Terminal 1 with Terminal 2:0V-10V analog voltage output;

Connect Terminal 2 with Terminal 3: 0/4 mA-20 mA analog current output

Corresponding models: NVF2G-1.5/PS4~400/TS4，NVF2G-2.2/TD2~3.7/TD2

Notes: The main power lines of single-phase inverter connect with Terminal R and Terminal T.

«Электро-Профи» - www.ep.ru

5.2 Terminal annotation

5.2.1 Terminal annotation of main circuit

Terminal Symbol	Terminal name and description
R,S,T	Input terminal of AC power supply, used for connecting with 3-phase 380V power-frequency power supply (single-phase 220V power supply is connected with Terminal R and Terminal T)
⊕1,Θ	Input terminal of DC power supply, used for connecting with external brake unit
⊕1,B	Connect with braking resistor terminal
⊕1,⊕2	DC reactor connector
U,V,W	AC output terminal, used for connecting with the motor
⏚	Grounding terminal, used for the grounding of inverter

5.2.2 Description of the control circuit terminal

Terminal Symbol	Terminal name	Description
R1A,R1B,R1C	Relay output	RA and RB are N/O contract group; RB and RC are N/C contract group
R2A,R2B,R2C		The functional parameters are set through F6.01 and F6.02
Y1,COM	Open collector output	Functional parameters are set through F6.00, the factory default value is signal output under forward status
485+,485-	Serial communication terminal Power supply used for frequency setting	Terminal serially communicated with the external part
10V		Potentiometer of 4.7kΩ-10kΩ connected with AI1,AI2 and GND
AI1,GND	Input terminal of analog signal	It is used to connect with potentiometer or 0V-10V signal to be taken as the frequency setting, set or feedback of PID
AI2,GND	Input terminal of analog signal	It inputs signals of 0V-10V and 0/4mA- 20mA to be taken as the frequency setting, set or feedback of PID
AO1,AO2	Output terminal of analog signal	AO1 and AO2 connecting with the analog signal meter of DC 0V-10V or 0/4mA-20mA can be used for indicating the operation frequency, output current, output voltage, etc.
X1	Multi-function input terminal	The default set is forward operation
X2	Multi-function input terminal	The default set is reverse operation
X3	Multi-function input terminal	The default set is forward jog
X4	Multi-function input terminal	The default set is reverse jog
X5	Multi-function input terminal	The default set is fault resetting
X6	Multi-function input terminal	The default set is external fault input
COM	Common point for multi-functional input terminals	Fit the use of X1-X6
24V,COM	24V output of auxiliary power supply	24V output of DC power (≤50mA)

6. Mounting dimensions (mm)

6.1 Product appearance diagram

Dimension of the hole on NVF2G display box

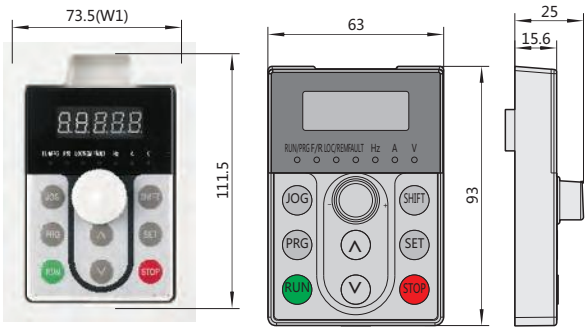

Dimensions of panel hole

NVF2G-2.2/TD2~3.7/TD2 and NVF2G-1.5/PS4~11/PS4



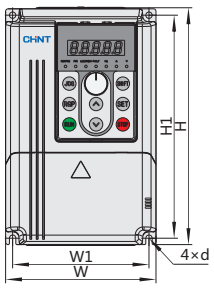

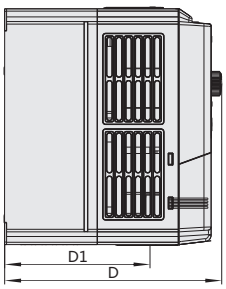

NVF2G-11/TS4~37/PS4



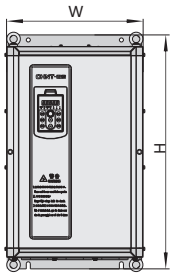



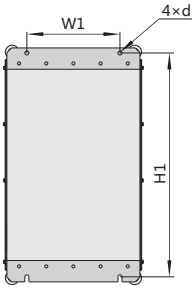

NVF2G-37/TS4~75/PS4



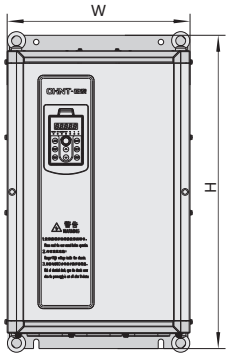



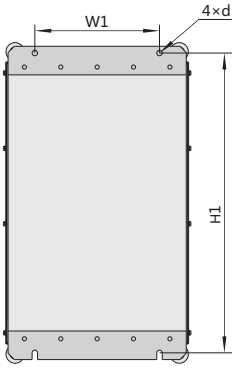

NVF2G-75/TS4~NVF2G-400/TS4



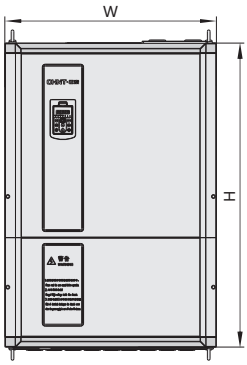

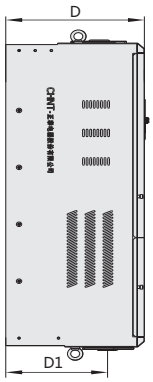

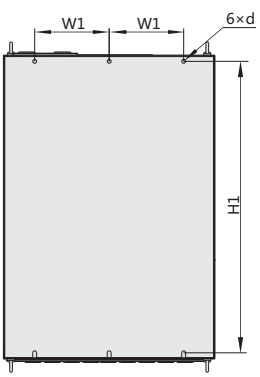

F

«Электро-Профи» - www.ep.ru

6.2 Product mounting dimensions

Product specifications	W	H	D	W1	H1	Mounting holed	Weight (kg)
NVF2G-1.5/PS4	118	187	173	107	175	Φ5	2.4
NVF2G-1.5/TS4(2.2/PS4)							
NVF2G-2.2/TS4(3.7/PS4)							
NVF2G-3.7/TS4(5.5/PS4)							
NVF2G-5.5/TS4(7.5/PS4)	155	247	189	140	232	Φ6	3.6
NVF2G-7.5/TS4(11/PS4)							
NVF2G-11/TS4(15/PS4)	191	378	183	90	362	Φ9	10.5
NVF2G-15/TS4(18.5/PS4)	215	426	213	120	407	Φ9	15
NVF2G-18.5/TS4(22/PS4)							
NVF2G-22/TS4(30/PS4)	300	527	230	166.6	506	Φ10	26.5
NVF2G-30/TS4(37/PS4)							
NVF2G-37/TS4(45/PS4)							
NVF2G-45/TS4(55/PS4)	352	603	257	240	577	Φ10	34.2
NVF2G-55/TS4(75/PS4)							
NVF2G-75/TS4(90/PS4)	406	631	272	126	600	Φ10	58
NVF2G-90/TS4(110/PS4)							
NVF2G-110/TS4(132/PS4)	470	807	352	150	769	Φ12	108
NVF2G-132/TS4(160/PS4)							
NVF2G-160/TS4(185/PS4)	540	892	390	180	848	Φ12	121
NVF2G-185/TS4(200/PS4)							
NVF2G-200/TS4(220/PS4)							
NVF2G-220/TS4(245/PS4)	710	1020	386	250	978	Φ13	171.5
NVF2G-245/TS4(280/PS4)							
NVF2G-280/TS4(315/PS4)							
NVF2G-315/TS4(355/PS4)	734	1200	426	250	1152	Φ16.5	280
NVF2G-355/TS4(400/PS4)							
NVF2G-400/TS4							

7. Optional accessories of peripheral equipment

Name of accessories	Functions of accessories
Circuit breaker	It will protect the power system when short circuit occurred. It must be connected between the AC reactors of the AC main circuit power supply, or be connected at the front of the inverter if there is no electric reactor.
AC input reactor	To increase the power factor of input power, reduce the higher harmonic and restrain the surge on the power supply of inverter.
DC reactor	1. To improve or restrain the aberration rate of the voltage of power grid and current waveform due to the pulse current generated at the charging and discharging of filter capacitor; 2. To reduce the amount of harmonic and increase the power supply quality of the power grid.
AC output reactor	1. It can effectively restrain the noise-grade vibration of motor; 2. It can effectively restrain the differential mode noise within 100KHz at the output side of the inverter; 3. It can effectively absorb surge voltage.
Brake units	1. It can control the pumping voltage of bus bar and has certain protective function to the inverter; 2. When frequent braking is needed, it can increase the braking capacity of inverter.
Braking resistor	It can consume the mechanical energy generated during braking as the thermal energy through brake resistor to reduce the deceleration time of drive system of the inverter.
Keyboard support plate	When the operation panel of inverter is needed to be installed on the door sheet of control cabinet or needed remote control of operation cabinet, it shall be installed through keyboard support plate.
Display extension cable	It is used as extension cable when using remote monitoring or pulling out the operation panel.

«Электро-Профи» - www.ep.ru

Selection table of accessories

Inverter	Selection of braking accessories			AC input electric reactor			AC output electric reactor			DC electric reactor		
NVF2G-□/□□□	Configuration conditions of the braking unit (10% braking ratio)	Braking resistance		Configuration	Rated current (A)	Inductance (mH)	Configuration	Rated current (A)	Inductance (mH)	Configuration	Rated current (A)	Inductance (mH)
		Resistance value (Ω)	Power (W)									
2.2/TD2	Standard internal braking unit	70	260		11	1		11	0.9		—	—
3.7/TD2		40	390		18.5	0.6		18	0.5			
1.5/PS4,1.5/TS4	Standard internal braking unit (including 22/PS4 model)	400	260		3.7	2.239		3	2.1	Do not need to purchase DC electric reactor	—	—
2.2/PS4,2.2/TS4		250	260		5.5	2.18		6.3	1.5		—	—
3.7/PS4,3.7/TS4		150	390		9	1.85		11	1.1		—	—
5.5/PS4,5.5/TS4		100	520		13	1.56		16	0.8		—	—
7.5/PS4,7.5/TS4		75	780		18	1		18	0.65		—	—
11/PS4,11/TS4		50	1040		24	0.52		28	0.33		—	—
15/PS4,15/TS4		40	1560		34	0.397		35	0.25		—	—
18.5/PS4,18.5/TS4		32	4800		38	0.352		40	0.2		—	—
22/PS4,22/TS4	Selectable internal braking unit(including 110/PS4 model)	27.2	4800		50	0.26		50	0.18	Selectable external configuration (including 110/PS4 model)	70	0.9
30/PS4,30/TS4		20	6000		60	0.24		63	0.09		80	0.86
37/PS4,37/TS4		16	7000		75	0.235		80	0.08		100	0.7
45/PS4,45/TS4		13.6	9600		91	0.17		100	0.06		120	0.58
55/PS4,55/TS4		10	12000		112	0.16		125	0.04		146	0.47
75/PS4,75/TS4		6.8	12000		150	0.12		160	0.035		160	0.36
90/PS4,90/TS4		6.8	12000		200	0.0705		200	0.023		180	0.33
110/PS4,110/TS4	Selectable external braking unit (including 315/PS4 model)	6	20000		224	0.0692		224	0.016	Standard external configuration	250	0.24
132/PS4,132/TS4		6	25000		280	0.0503		280	0.016		280	0.24
160/PS4,160/TS4		2.5	50000		315	0.0447		315	0.013		340	0.16
185/PS4,185/TS4					400	0.0352		400	0.011		460	0.09
200/PS4,200/TS4					400	0.0352		400	0.011	Standard external configuration (including 315/PS4 model)	460	0.09
220/PS4,220/TS4					450	0.0313		560	0.009		500	0.82
245/PS4,245/TS4					560	0.0251		600	0.008		600	0.072
280/PS4,280/TS4					560	0.0251		600	0.008		600	0.072
315/PS4,315/TS4	Selectable configuration of external braking unit				660	0.042		660	0.011	Standard internal configuratino	1000	0.050
355/PS4,355/TS4					660	0.042		660	0.011		1000	0.050
400/PS4,400/TS4					800	0.035		800	0.009		1000	0.050

Corresponding physical diagram of each accessory







Physical diagram of display extension cable and support plate of the panel

Display extension cable



Support plate of the panel




Remarks: When the panel of inverter needs to be pulled out for control, it shall be noted specially when ordering and the length of the display extension cable shall be indicated.

F

«Электро-Профи» - www.ep.ru

8. Ordering information

8.1 Type designation

NVF2G-□/□ □ □

- Input voltage class: 2: 220V series; 4: 380V series
- Input voltage: D: single-phase; S: 3-phase
- Type: T: General type; P: Fan and water pump type
- Adaptive motor power (kW)
- Improved type
- Design sequence No.
- Inverter
- Company code

When ordering, you shall select the needed model and specification according to the illustration of model and implication:
For example:
single-phase 220V series: NVF2G-3.7/TD2
3-phase 380V general type: NVF2G-45/TS4
3-phase 380V fan and water pump type: NVF2G-55/PS4

8.2 Selection guidance

8.2.1 In order to ensure the reliable operation of inverter, the power of inverter must be equal or greater than the power of motor.

8.2.2 General-type inverter is mainly used for load excluding fan and water pump, such as: rolling mill, mixer, ball grinder, centrifugal machine and other heavy-load machine.

8.2.3 Fan and water pump type of inverter is mainly used for fan, water pump and other light-load machine.

9. Customized VFC control cabinet

A variety of VFC control cabinets can be specially ordered according to the production process requirements.



«Электро-Профи» - www.ep.ru



NVF300M Series Inverter

1. General

NVF300M Series Mini inverter is a kind of high-performance vector control inverter, which is independently developed by our company. It adopts advanced control strategy to achieve a high-precision magnetic flux vector torque control, and it is characterized by high control precision, wide speed range, large starting torque, high reliability, strong overload capacity and flexible and convenient operation. Rich and practical speed control, torque control, process close loop control, simple PLC, swing frequency control, multi-section speed control and other functions can meet the needs of a variety of complex high precision drive.

NVF300M Series Mini inverter is divided into single-phase and three-phase general inverters, which has strong load adaptability, stable and reliable operation, automatic energy-saving operation and other functions. It can be widely applied in medical care, food, water treatment, papermaking, textile, machine tool, conveyor belt, carpentry, traffic and transportation, communication, machinery and equipment and other electric drive and automation control fields.

Products are designed and tested in accordance with the international standard; user environment test is strictly simulated.

Accordant standards: GB/T 12668.2-2002, IEC 61800-2.

2. Type designation

N VF 300 M - □/ T □□

- Input voltage class: 2:220V series; 4:380V series
- D: Single phase input; S: Three-phase input
- General type
- Motor adaption power
- Mini type
- Design SN
- Inverter
- Enterprise characteristic code

3. Operating conditions

3.1 Temperature

Operating ambient temperature ranges from -10℃ to 40℃. When the temperature is above 40℃, the inverter will be used through derating at 1% of the rated power for every increase of 1℃.

3.2 Humidity

5%～95%RH, without condensed water.

3.3 Altitude

Inverter which is installed below the altitude of 1000 meters can output the rated power. When the altitude exceeds 1000 meters, the inverter needs to be used through derating and is used through derating at 10% of the rated power for every increase of 1000 meters.

3.4 Shock and vibration

Do not allow the inverter to fall to the ground or suffer from sudden shock. Do not install the inverter in places where there may be often vibration.

3.5 Electromagnetic radiation

Install the inverter in places far away from the source of electromagnetic radiation.

3.6 Water and moisture protection

Do not install the inverter in places where there may be water spray or dew.

3.7 Air pollution

Do not install the inverter in an air polluted place, such as dust, corrosive gas and other environment etc.

3.8 Storage environment

Do not install the inverter in environment with direct sunlight, oil, steam and vibration.



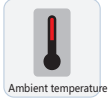

F

«Электро-Профи» - www.ep.ru

4. Technical data

4.1 Inverter specifications

Input voltage level	Single phase 200V ~ 240V		
Inverter power (kW)	0.4/TD2	0.75/TD2	1.5/TD2
Applicable motor power (kW)	0.4	0.75	1.5
Rated output current (A)	2.5	4.0	7.5

Input voltage level	Three-phase 200V ~ 240V		
Inverter power (kW)	0.4/TS2	0.75/TS2	1.5/TS2
Applicable motor power (kW)	0.4	0.75	1.5
Rated output current (A)	2.5	4.0	7.5

Input voltage level	Three-phase 200V ~ 240V		
Inverter power (kW)	0.4/TS4	0.75/TS4	1.5/TS4
Applicable motor power (kW)	0.4	0.75	1.5
Rated output current (A)	1.2	2.1	3.8

4.2. Standard technical features

Input and output characteristics	Input voltage range: 220V series : 187V~253V , 380V series : 323V~437V
	Input frequency range:(47~63)Hz
	Output voltage range:0~Input voltage
	Output frequency range:(0~300)Hz
Peripheral interface	Programmable digital input: 5 input (including 1 high-speed pulse input)
	Programmable analog input: AI1:(0~10)V or (0/4~20)mA input; AI2:(0~10)V or (0/4~20)mA input;
	High speed pulse output: 1 output
	Relay output: 1 output
	Analog output: 1 output, optional (0~10)V or (0/4~20)mA
Operation function features	Torque boost: Automatic torque boost; manual torque boost 0.1%~30.0%
	Dynamic braking: Built-in brake unit, external braking resistor
	DC braking: optional start and stop; operating frequency: (0~60)Hz; brake current: (0~100)% rated current; action time (0.0~30.0)s
	Jog control: Jog frequency range:(0~50.0)Hz; jog acceleration and deceleration time (0.1~6000.0)s
	Multi-speed operation: To achieve multi-speed operation through installing the simple PLC internally or controlling the multi-function terminal control
	Automatic voltage regulation (AVR): Can automatically keep the output voltage constant when the grid voltage changes
	Automatic current limiting: Automatically limit the current during operation to prevent frequent over-current fault tripping
	Built-in PID controller: Can easily constitute a close-loop control system
	Protection function: Provide as many as 20 kinds of fault protection functions: overcurrent, overvoltage, undervoltage, overheating, open phase, overload, PID disconnection and other protection functions.
Technical characteristics	Control mode: Without PG vector control, V/F control
	Overload capacity: 150% of rated current 60s
	Starting torque: Without PG vector control, 0.5Hz/150 %(rated torque)
	Speed ratio: 1:100(without PG control); 1:50 (V/F control)
	Speed control precision:±0.5% of maximum speed
	Carrier frequency:(0.5~15)kHz
Structure	Protection grade: IP20
	Brake unit: Three-phase generalinverter comes standard with the built-in brake unit, and the single phase general inverter is equipped with the optional brake unit.
	Cooling mode: Cooling by high-speed DC fans

«Электро-Профи» - www.ep.ru

5. Wiring diagram

5.1 Standard wiring diagram

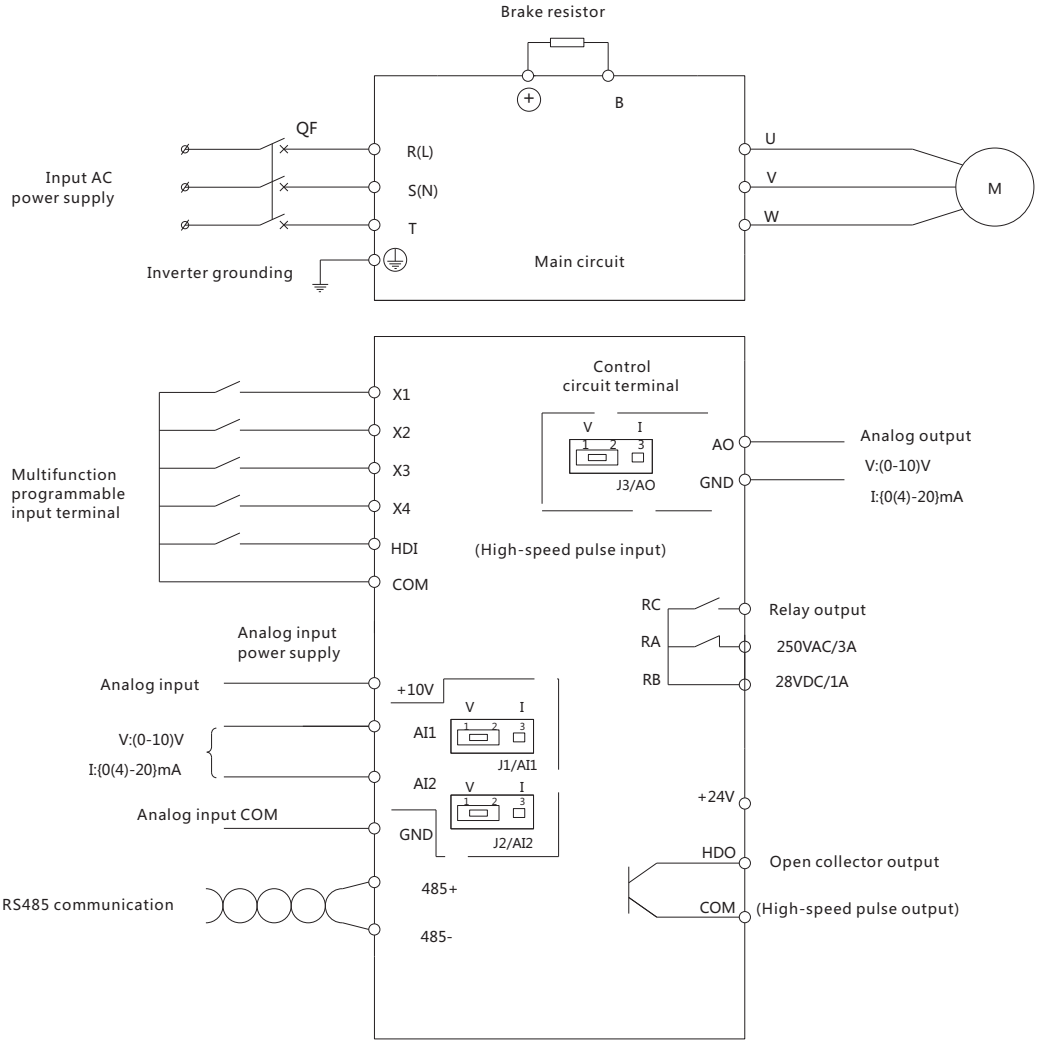

Correspond to control terminals arrangement

RA	RB	HDI	X1	X2	X3	X4	AI1	AI2	
RC	HDO	+24V	COM	485+	485-	GND	+10V	AO	

J1 J2 J3 jumper selection:
J1 and J2 positions (AI1 and AI2 analog input interfaces):
When 1 is connected to 2: 0V ~ 10V analog voltage input; when 2 is connected to 3, 0/4mA ~ 20mA analog current input
J3 position(AO analog output interface):
When 1 is connected to 2: 0V ~ 10V analog voltage output; when 2 is connected to 3, 0/4mA ~ 20mA analog current output

«Электро-Профи» - www.ep.ru

5.2 Notes to main circuit terminal

Terminal mark	Terminal name and description
R, S, T L, N	AC power input terminal, connecting the three-phase fundamental frequency power supply (200V～240V)/(380V～460V) AC power input terminal, connecting the single-phase fundamental frequency power supply (200V～240V)
⊕, B	Connecting the brake resistor terminal
U, V, W	AC output terminal, connecting the motor
⏚	Ground terminal, for inverter grounding

5.3. Control circuit terminal description

Category	Terminal screen	Name	Terminal function description	Specifications
Power supply	+10V	+10V Power supply	Provide +10V reference power supply externally	Maximum allowable output current 5mA
	GND	+10V Power ground	Analog signal and +10V power supply reference ground	Internal isolation of GND and COM
Analog input	AI1	Analog input AI1	Accepting analog voltage or current single end input; voltage / current input are selected by the control board jumper J1 (reference ground: GND)	Input voltage range: -10V~10V (input impedance: 45 kΩ); resolution: 1/4000
	AI2	Analog input AI2	Accepting analog voltage or current single end input; voltage / current input are selected by the control board jumper J2 (reference ground: GND)	Input current range: 0mA~20 mA; resolution: 1/2000 (jumper is needed)
Analog output	A0	Analog output 1	Providing analog voltage / current output; the output voltage and current are selected by the control board jumper J3; see Function code F6.11 description for the factory default output voltage (reference ground: GND)	Output voltage range:(0～10)V Current output range:(0/4～20)mA
Commu-nication	458+	RS485 communication interface	Positive terminal of 485 differential signal	Standard RS485 communication interface
	485-		Negative terminal of 485 differential signal	Please use the twisted pair or shielded wire
Multi - function input terminal	X1	Multi-functioninputterminal1	Programmable is defined as a multi-function switch input terminal; introduction to functions of F5.00～F5.04 andF5.07 input terminals in switch input terminals (group F5)	Photoelectric coupling isolation input impedance: R = 3.3 k Ω; X1～X4 maximum input frequency: 200Hz;X7 maximum input frequency: 100kHzInput voltage range:20～30V
	X2	Multi-functioninputterminal2		
	X3	Multi-functioninputterminal3		
	X4	Multi-functioninputterminal4		
	HDI	Multi-function or pulse input terminal HDI		
Multi - function output terminal	HDO	Open collector pulse output terminal	Programmable is defined as a multi-function pulse signal output terminal; introduction to functions of F6.00 and F6.02 output terminals in switch input terminals (group F6) (Public terminal: COM)	Output frequency range: Determined by F6.18, maximum 100kHz
Power supply	+24V	+24V Power supply	Providing +24V power supply externally to use with X1-X4, HDI, HDO and other terminals	Maximum output current: 200mA
	COM	+24VPublic power end		Internal isolation of COM and GND
Relay output terminal 1	RA	Relay output	Programmable is defined as a multi-function relay output terminal; introduction to functions of F6.03 output terminal in switch output terminals (group F6)	RA-RB: Normally closed, RB-RC: Normally open Contact capacity: NO/NC:5A/3A 250V～ See F6 for Methods of use. Overvoltage level of the input voltage of the relay output terminal is overvoltage level Ⅱ.
	RB			
	RC			

6. Overall and mounting dimensions (mm)

Outside drawing for panel

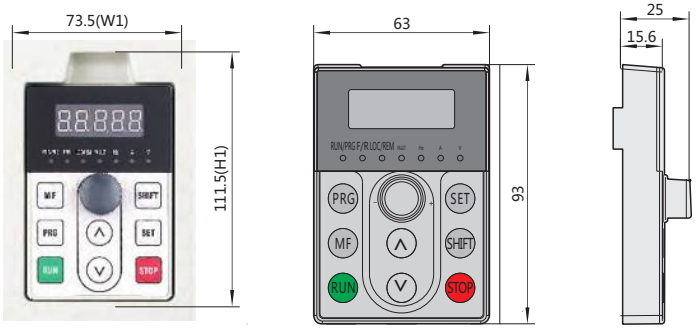

NVF300M-0.4/TD2~1.5/TD2, 0.4/TS2~1.5/TS2, 0.4/TS4~1.5/TS4



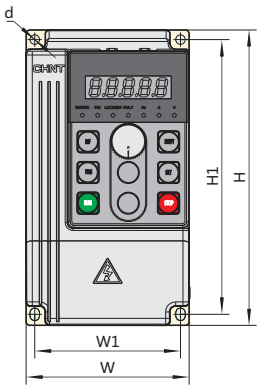

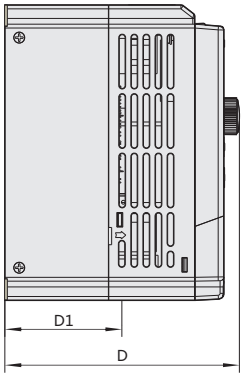

Model	Installation size							Weight
	W	H	D	W1	H1	D1	d	kg
Display box				73.5	111.5			
NVF300M-0.4/TD2	85	154	123	76	143	61	5	0.9
NVF300M-0.75/TD2								
NVF300M-1.5/TD2								
NVF300M-0.4/TS2								
NVF300M-0.75/TS2								
NVF300M-1.5/TS2								
NVF300M-0.4/TS4								
NVF300M-0.75/TS4								
NVF300M-1.5/TS4								

F

7. Ordering information

7.1 Select the model and specifications desired in accordance with the description of model and meaning when ordering:

For example:

Single phase 200V series: NVF300M-0.75/TD2

Three-phase200V series:NVF300M-0.75/TS2

Three-phase 380V series:NVF300M-0.75/TS4

7.2. Selection guide

7.2.1 To ensure the reliable operation of inverter, its power must be equal to or greater than the motor power.

7.2.2 General inverter is suitable for fan, water pump, rolling mill, mixer, ball mill, centrifuge and other loads.

8. Peripheral equipment options

Inverter	Brake attachment options			AC input reactor			AC output reactor		
NVF300M-□/□□□	Configuration of brake unit (10% of the braking ratio)	Brake resistance		Config-uration	Rated current(A)	Inductance (mH)	Config-uration	Rated current (A)	Inductance (mH)
		Resista nce (Ω)	Power (W)						
0.4/TD2	Brake unit built-in selection	220	80	External selection	2.4	4.6	External selection	2.4	4.5
0.75/TD2		220	80		4.5	2.4		4.5	2.3
1.5/TD2		100	260		7	1.6		7	1.5
0.4/TS2		220	80		2.4	4.6		2.4	4.5
0.75/TS2		220	80		4.5	2.4		4.5	2.3
1.5/TS2		100	260		7	1.6		7	1.5
0.4/TS4	Brake unit built-in selection	750	80		2.5	2.83		3	2.1
0.75/TS4		750	80		3.7	2.239		3	2.1
1.5/TS4		400	260		3.7	2.239		6.3	1.5
Display extension cable and display box pallet picture	Display extension cable			panel pallet					
	Note: if it is necessary to pull the inverter panel for control, it shall be specially noted when ordering and length of the display extension line indicated.								

«Электро-Профи» - www.ep.ru





NVF3 Series Inverter

1. Overview

As a high-performance open-loop vector controlled inverter developed by our company independently, NVF3 series inverter achieves the high-precision flux vector torque control by using the advanced control algorithm and is characterized by high control accuracy, wide speed range, large starting torque, high reliability, strong overload capacity and flexible operation. The rich and practical speed control, torque control, process closed-loop control, simple PLC, wobble frequency control and multi-speed control can meet a variety of complex high-precision transmission needs.

NVF3 series inverter have two types that are the typical type (heavy load) and fan-pump type (light load), with the functions of strong load adaptability, reliable operation and automatic energy saving operation. It can be widely used in electrical transmission and automation control areas, including lifting, machine tool, textiles, energy, mining, metallurgy, chemical, printing and dyeing, injection molding, foods, cement, water supply, municipal services and papermaking.

The product is designed and tested in accordance with international standards and strictly simulates users' application environment for tests.

The product conforms to standards GB/T 12668.2-2002 and IEC 61800-2.

Typical applications

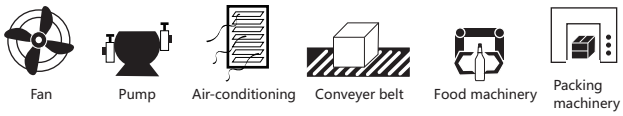

2. Product Characteristics

2.1 Model and meanings

N VF 3 - □/ □□□

- Input voltage level: 2: 220V series; 4: 380V series
- Input voltage: D: single phase; S: three-phase
- Type: T: typical type; P: fan-pump type
- Matched motor power (kW)
- Design.number
- Inverter
- Enterprise code

«Электро-Профи» - www.ep.ru

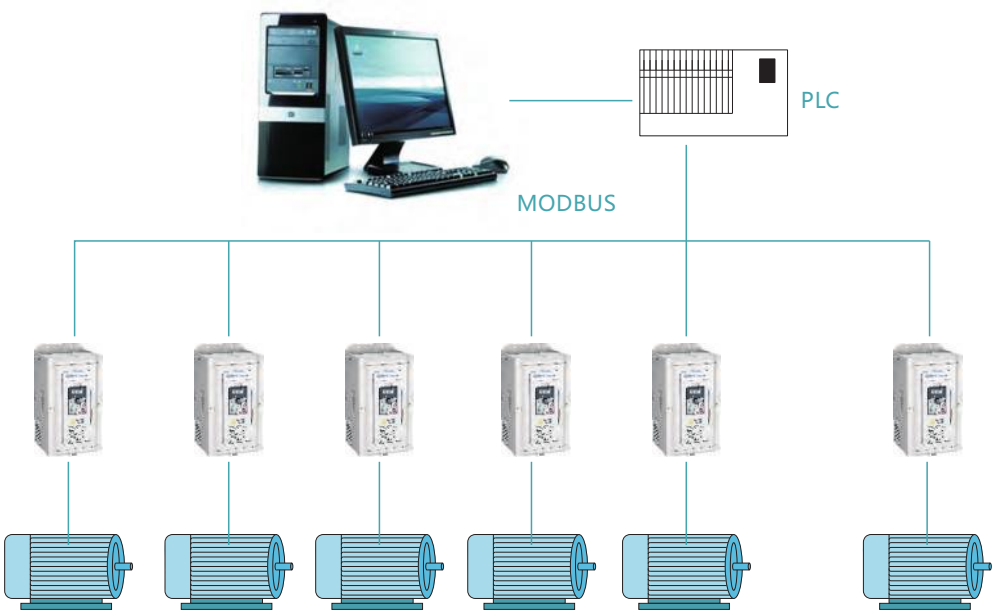

2.2 Excellent motor drive and control performance

- Accurate motor auto-tuning function: accurate auto-tuning of comprehensive and static motor parameters, easy debugging, simple operation, and can improve the control accuracy and response speed;
- Good energy-saving effect: The lighter the motor load is, the lower the efficiency is. Energy-saving control will improve the operating efficiency of motor, so that the motor is always running in the most efficient state no matter how the load changes;
- Unique dead zone compensation technology can improve the output torque;
- High starting torque, 0.5Hz 150% rated torque (without PG control); 0.5Hz 180% rated torque (with PG control);
- Strong overload capacity: lasting for 60s at the rated current of 150% and infrequent overload protection in case of heavy load or load mutation, which ensure the continuous and stable operation of the equipment;
- Wide carrier frequency design: (0.5 ~ 15) kHz, which can effectively reduce the running noise of motor;
- External standard DC reactor (above 110kW) can effectively inhibit the high harmonics and improve the power factor;
- Real-time monitoring: real-time monitoring of DC busbar voltage, motor current and running status to timely know the running status of the system.

2.3 Highly reliable design

- Wide input voltage range: input voltage fluctuation up to ±15%;
- The low in ductance design enables the system to be more stable and reliable;
- The high-power two-stage DC-DC drive design makes the operation safer and more reliable;
- The input filter design effectively provides lightning protection and reduces harmonic interference;
- The automatic voltage stabilization and automatic current limiting functions make the operation more stable;
- The perfect protection function and fault diagnosis system provide guarantee for the equipment.

2.4 Rich application functions

- Function modular design: the function modular design is integrated into NVF3 series inverter which makes the operation and debugging more convenient;
- The built-in torque control function is suitable for wire drawing machine and other special equipment and can achieve constant tension control;
- The built-in intelligent PID control and sleep functions realize high-efficiency energy saving and unattended automatic control;
- Simple PLC control can realize the variable speed operation of the inverter in accordance with a certain law, which can not only define a circular multi-frequency in the function code, but also define the operation time, direction and number of cycles of multi-frequency in the function code;
- The built-in RS485 communication interface and built-in Modbus-RTU and Modbus-ASCII protocols in line with international standards can easily structure the system network, perfectly realizing the barrier-free communication with the industrial machine;
- Common DC busbar design: Multiple inverters can be parallelly connected by the common DC busbar, which can share the braking feedback energy, avoid over-voltage and stabilize the DC busbar voltage of a single inverter to ensure the continuous and stable operation of the equipment;
- With wobble control function, and suitable for textile and other industries.

2.5 Strong environmental adaptability

- The environmental adaptability is strong when the temperature of the operating environment is at -10 ℃ ~ +40 ℃.When the temperature is over 40 ℃, use in accordance with 1% decrease per increase of 1 ℃;
- The wide input voltage range with the fluctuation range of 380V ± 15% can adapt to different civil and industrial power grids;
- Circuit boards use the conformal coating process, which can adapt to a variety of complex conditions.

F

«Электро-Профи» - www.ep.ru

3. Rich software features

DC braking when starting	**Stop and restart the free running motor** When the motor turns at irregular directions during the free running, the motor is immediately started automatically after being stopped by DC braking.
Automatic voltage regulation (AVR)	**Ensure the stability of output voltage during the operation of inverter** When the grid voltage fluctuates, the output voltage of the inverter does not change with the fluctuation of the grid voltage.
Automatic current limiting	When the load fluctuation exceeds the level of current limiting, it will be automatically adjusted to always keep the current within the allowable range.
Torque limit	**Protect the machinery and ensure the reliable operation of machinery and equipment** The torque generated by the motor can be controlled within the set value, which helps to protect the machinery.
Frequency detection	**Detect the frequency for the interlocking of brakes** When the output frequency exceeds the set value, output the signal to control the interlocking of external equipment.
Wobble frequency control	**Wobble up and down centering on the set frequency** The wobble frequency function applies to the textile and chemical fiber industries and occasions needing traversing and winding.
Fault reset	**Improve the reliability of continuous operation** Even if a fault is detected in the inverter, it will automatically reset after self-diagnosis and will restart operation without stopping the motor. The times of automatic reset are 3 times.
Simple PLC	**Define the basic logical sequence of the equipment to achieve the automatic control** The operating mode, operating frequency, running direction and acceleration and deceleration times of the built-in PLC can be set in segmentation separately
Droop control	**Achieve the load sharing** The droop control is also known as the load distribution. This function can achieve the load sharing when multiple motors drag the same load.
High-speed pulse input	**Achieve the highly precise speed control** Realize the external of the equipment controlling the operating frequency through the high-speed pulse signal or as the occasion at the PID feedback channel.
High-speed pulse output	**Real-time monitoring of parameters of the inverter to achieve the multi-machine linkage** Realize the set frequency, operating frequency, output current, output voltage, motor speed and other physical output, and can also be applied to the linkage of multiple inverters.
Speed tracking operation	Start with the speed of motor under coast stop. The motor under coast stop can be introduced to the set frequency automatically without the speed detector.
Frequency hopping control	**Skip the specific frequency to prevent the vibration of the mechanical system** Run and automatically avoid the resonance point during the operation at the constant speed in order to prevent the vibration of the mechanical system.
Multi-speed operation	**Run the program at the set speeds** According to the signal combination, run at the internally stored frequency. The multi-speed control can also be achieved through PLC and limit switches
Energy saving operation	**Automatically operate at the maximum efficiency** According to the load and rotational speed, detect the load current and always provide voltage with the maximum efficiency for the motor to achieve the most efficient energy-saving operation.
Fault recording	**Automatically store the fault information** When a fault alarm occurs, the current, voltage and fault type will be automatically recorded to provide a reference for the judgement of fault causes.
Pump sleep control	**Reduce mechanical wears** When the water consumption at night is very small and the output frequency of the inverter is lower than the sleep frequency, the inverter will be on the sleep state.
PID control	**Automatically control the process** Conduct PID operation inside the inverter, and use the operation result as the frequency command for the quantitative control of pressure, flow rate and air volume.
Overvoltage suppression	**Prevent overvoltage and fault trip** It is effective to the operation of punch having the regeneration state due to the crank movement. Increase or decrease the operation frequency according to the regeneration state to suppress the overvoltage.
Automatic torque increase	**Increase the low frequency output torque in V/F control mode** The manual / automatic torque increase in V/F mode can effectively increase the low frequency torque of the inverter.
Multi-stage closed-loop control	**Meet the requirements for different pressure settings at different time buckets** The multi-stage closed-loop setting control can meet the requirements for different pressures at different time buckets in occasions such as water supply and gas supply so as to reduce waste and achieve energy efficiency.
Complete V/F separation	**Fully realize the independent adjustment of the output voltage and output frequency** Realize the complete separation of V and F, that is, users can set the voltage and frequency giving channels separately to combine into a real-time V/F curve for torque motor control.

«Электро-Профи» - www.ep.ru

4. Main parameters and technical performance

4.1 Specifications parameters

Input voltage range	Three-phase	380V			
Inverter power (kW)	1.5/PS4,1.5/TS4	2.2/PS4,2.2/TS4	3.7/PS4,3.7/TS4	5.5/PS4,5.5/TS4	
Applicable motor power (kW)	1.5	2.2	3.7	5.5	
Rated output current (A)	3.8	5.1	9.0	13	

Input voltage range	Three-phase	380V			
Inverter power (kW)	7.5/PS4,7.5/TS4	11/PS4,11/TS4	15/PS4,15/TS4	18.5/PS4,18.5/TS4	22/PS4,22/TS4
Applicable motor power (kW)	7.5	11	15	18.5	22
Rated output current (A)	15	25	32	37	45

Input voltage range	Three-phase	380V			
Inverter power (kW)	30/PS4,30/TS4	37/PS4,37/TS4	45/PS4,45/TS4	55/PS4,55/TS4	75/PS4,75/TS4
Applicable motor power (kW)	30	37	45	55	75
Rated output current (A)	60	75	91	112	150

Input voltage range	Three-phase	380V			
Inverter power (kW)	90/PS4,90/TS4	110/PS4,110/TS4	132/PS4,132/TS4	160/PS4,160/TS4	185/PS4,185/TS4
Applicable motor power (kW)	90	110	132	160	185
Rated output current (A)	176	210	253	304	340

Input voltage range	Three-phase	380V			
Inverter power (kW)	200/PS4,200/TS4	220/PS4,220/TS4	250/PS4,250/TS4	280/PS4,280/TS4	315/PS4
Applicable motor power (kW)	200	220	250	280	315
Rated output current (A)	377	426	465	520	585

Input voltage range	Three-phase	380V	
Inverter power (kW)	315/TS4	355/TS4,355/PS4	400/TS4,400/PS4
Applicable motor power (kW)	315	355	400
Rated output current (A)	585	690	750

4.2 Standard technical parameters

Input and output character	Input voltage range: 380V (100% ± 15%)
	Input frequency range: (47 ~ 63) Hz
	Output voltage range: 0 ~ rated input voltage
	Output frequency range: typical type: (0 ~ 300) Hz; fan-pump type: (0 ~ 120) Hz
Peripheral interface	Programmable digital input: 7 channels (including 1 channel high-speed pulse input)
	Programmable analog input: AI1: (0 ~ 10) V or (0/4 ~ 20) mA input; AI2: (0 ~ 10) V or (0/4 ~ 20) mA input; AI3: (-10 ~ +10) V input; AI1 + Ai2
	Open collector output: 2 channel outputs (including 1 channel high-speed pulse output)
	Relay output: 1 channel output;
	Analog output: 2 channel outputs, optional (0 ~ 10) V or (0/4 ~ 20) mA
Operating function character	Torque boost: automatic torque boost; manual torque increase by 0.1% ~ 30.0%
	Energy consumption braking: built-in or external braking unit, with external braking resistor
	DC braking: optional DC braking at start and stopping, operating frequency (0 ~ 60) Hz, braking current (0 ~ 100) % rated current, operating time (0.0 ~ 30.0) s
	Jog control: jog frequency range: (0 ~ 50) Hz, jog acceleration and deceleration time (0.1 ~ 6000.0) s
	Multi-speed operation: realizing the multi-speed operation through building in the simple PLC or controlling the multi-function terminal
	Automatic voltage regulation (AVR): automatically maintaining the constant output voltage when the grid voltage changes
	Automatic current limiting: automatically limiting the current during operation to prevent frequent over-current and fault trip
	Built-in PID controller: easily constitute the closed-loop control system
	Custom MF function key: MF key can be set as jog operation, free stop and fast stop
	Protection function: providing more than 20 kinds of fault protection functions, such as over-current, overvoltage, undervoltage, overheating, phase failure, overload and PID disconnection protections
Technical characters	Control mode: without PG vector control, with PG vector control, without PG V/F control, with PG V/F control
	Overload capacity: typical type: 1min at 150% of rated current; fan-pump type: 1min at 120% of rated current
	Starting torque: without PG vector control: 0.5Hz/150% (rated torque); with PG vector control: 0.5Hz/180% (rated torque)
	Speed regulation ratio: without PG vector control: 1: 100; with PG vector control: 1: 1000
	Speed control accuracy: (without PG vector control): ± 0.2% maximum speed; (with PG vector control): ± 0.01% maximum speed
	Carrier wave: (0.5 ~ 15) kHz

F

«Электро-Профи» - www.ep.ru

Structure	Protection class: IP20
	Braking unit: the braking unit is the standard configuration to models below 22kW and is optional to models above 22kW.
	Cooling method: the full series of NVF3 inverter use the high-speed DC fan for cooling.

5. Basic operation wiring diagram

5.1 Standard wiring diagram

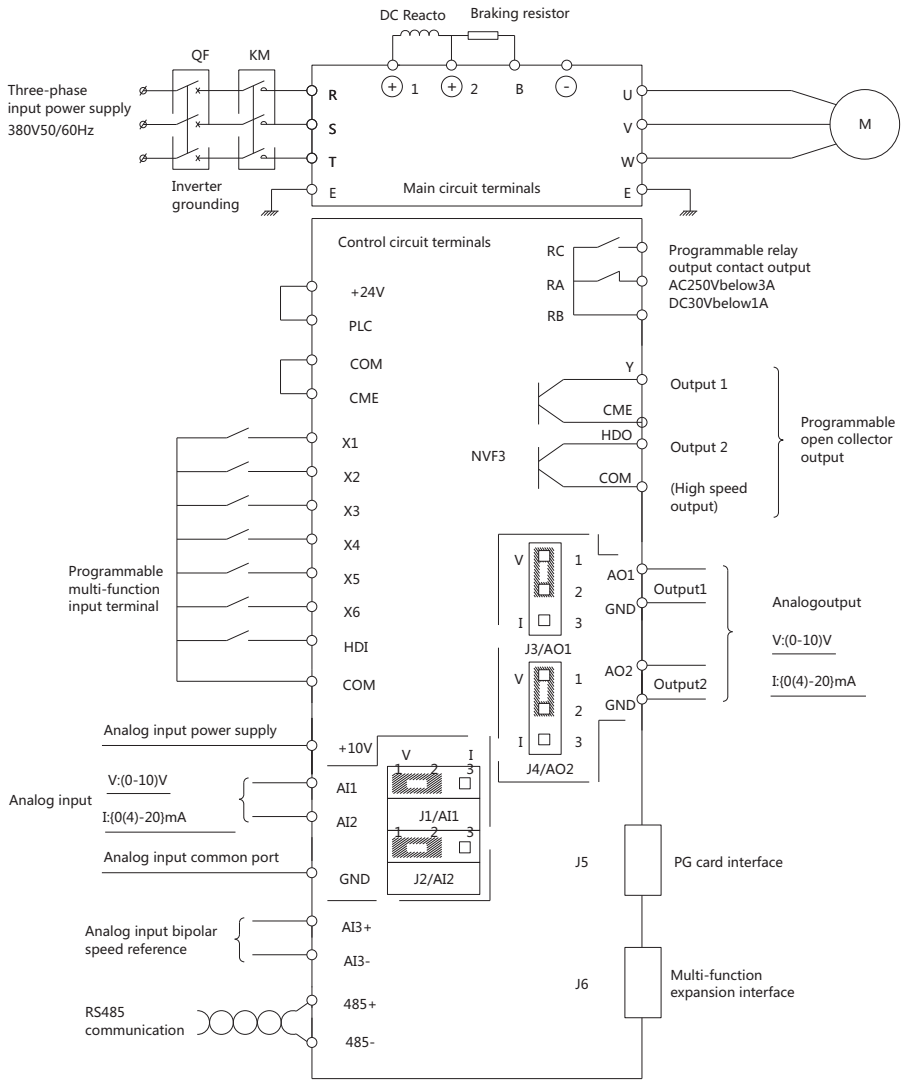

Standard wiring diagram for NVF3-1.5/TS4 ~ 315/PS4 models
J1, J2, J3 and J4 jumper selection:
J1, J2 positions (AI1, AI2 analog input interface):
When connect 1 to 2: 0V ~ 10V analog voltage input; When connect 2 to 3: 0/4mA ~ 20mA analog current input
J3, J4 positions (AO1, AO2 analog output interface):
When connect 1 to 2: 0V ~ 10V analog voltage output; When connect 2 to 3: 0/4mA ~ 20mA analog current output

«Электро-Профи» - www.ep.ru

5.2 Notes of main circuit terminals

Terminal mark	Terminal name and description
R、S、T	AC power input terminal, connecting power frequency three-phase power supply 380V
⊕1、⊖ ⊕1、⊕2	DC power input terminal, connecting the external braking unit DC busbar positive pole, connecting DC reactor
⊕、B	Connecting the braking resistor terminal
U、V、W、⊕2、Ⓑ	AC output terminal, connecting the motor
⏚	Ground terminal, for inverter grounding

5.3 Descriptions of control circuit terminals

Type	Terminal screen printing	Name	Description of terminal function	Specifications
Power supply	+10V	+10V power supply	External + 10V reference power supply	Maximum allowable output current: 5mA
	GND	+10V GND	Reference grounds of analog signals and + 10V power supply	Internal isolation from COM and CME
Analog input	AI1	Analog single-ended input Ai1	Receive the analog voltage or current single-ended input, with voltage / current input being selected by jumper J1 / Ai1 of the control panel (reference ground: GND)	Input voltage range: -10V ~ 10V (input impedance: 45kΩ), resolution: 1/4000
	AI2	Analog single-ended input Ai2	Receive the analog voltage or current single-ended input, with voltage / current input being selected by jumper J2 / AI2 of the control panel (reference ground: GND)	Input current range: 0mA ~ 20 mA, resolution: 1/2000 (jumper required)
	AI3+	Analog voltage differential input AI3+or analog voltage single -ended input	When receiving the analog voltage differential input, AI3+ is the non-inverting input terminal and AI3- is the inverting input terminal; when receiving the analog voltage single-ended input, AI3+ is the signal input terminal and AI3- should be connected to GND (reference ground: GND).	Input voltage range: -10V ~ 10V (input impedance: 15kΩ), resolution: 1/4000
	AI3-	Analog voltage differential input AI3-or analog voltage single -ended input		
Analog output	A01	Analog output 1	Provide analog voltage / current output with the output voltage / current being selected by jumper AO1 of the control panel: see function code F6.11 Description for the factory default output voltage (reference: GND)	Voltage output range: (0 ~10) V Current output range: (0/4 ~20) mA
	A02	Analog output 2	Provide analog voltage / current output with the output voltage / current being selected by jumper AO2 of the control panel: see function code F6.12 Description for the factory default output voltage (reference: GND)	Voltage output range: (0 ~10) V Current output range: (0/4 ~20) mA
Communi cation	458+	RS485 communication interface	Positive terminal of 485 differential signal	Standard RS485 communication interface
	485-		Negative terminal of 485 differential signal	Please use twisted pair or shielded wire
Multi-function input terminal	X1	Multi-function input terminal 1	Be programmable as the multi-function binary input terminals, the description of functions of F5.01 ~ F5.07 input terminals in binary input terminals (F5 group)	Optocoupler isolation, input impedance: R= 3.3kΩ, X1 ~ X6 Maximum input frequency: 200Hz, HDI maximum input frequency: 100kHz Input voltage range: (20 ~ 24) V
	X2	Multi-function input terminal 2		
	X3	Multi-function input terminal 3		
	X4	Multi-function input terminal 4		
	X5	Multi-function input terminal 5		
	X6	Multi-function input terminal 6		
	HDI	Multi-function or pulse input terminal HDI		
Multi-function output terminal	Y	Bidirectional open collector output terminal 1	Be programmable as the multi-function binary output terminals, the description of functions of F6.01 output terminal in binary input terminals (F6 group) (common port: CME)	Optocoupler isolation output: maximum operational voltage: 30V Maximum output current: 50mA
	HDO	Open collector pulse output terminal	Be programmable as the multi-function binary output terminals, the description of functions of F6.02 output terminal in binary input terminals (F6 group) (common port: CME)	Output frequency range: determined by F6.18, 100kHz maximum
Power supply	+24V	+24V power supply	External +24 V power supply	Maximum output current: 100mA
	PLC	Multi-function input common port	Common port of multi-function input terminal (short circuit with 24V)	Common port of X1 ~ X6 and HDI, internal isolation of PLC and 24V
	COM	24V power supply common port	A total of 1 common terminal, used together with other terminals	Internal isolation of COM, CME and GND Internal short circuit of CME and COM
	CME	Y output common port	Common port of multi-function output terminal Y1 (short circuit with COM)	
Relay output terminal 1	RA	Relay output	Be programmable as the multi-function relay output terminals, the description of functions of F6.03 output terminal in binary output terminals (F6 group)	RA-RB: NC, RB-RC: NO Contact capacity: NO/NC: 5A/3A 250V See the usage method in F6 instructions. The overvoltage level of the input voltage of the relay output terminal is class Ⅱ.
	RB			
	RC			

F

«Электро-Профи» - www.ep.ru

6. Overall and mounting dimension

Outline Drawing of Display Panel

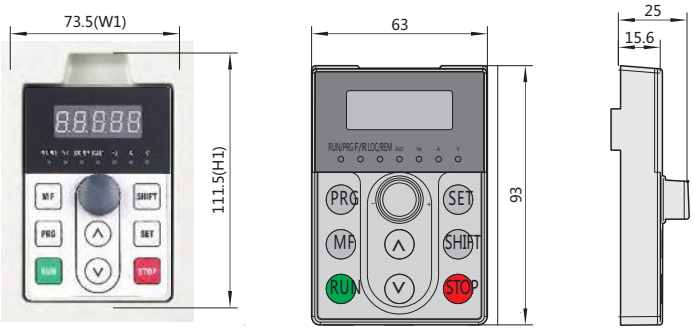

NVF3-1.5/TS4~11/PS4 Outline Drawings

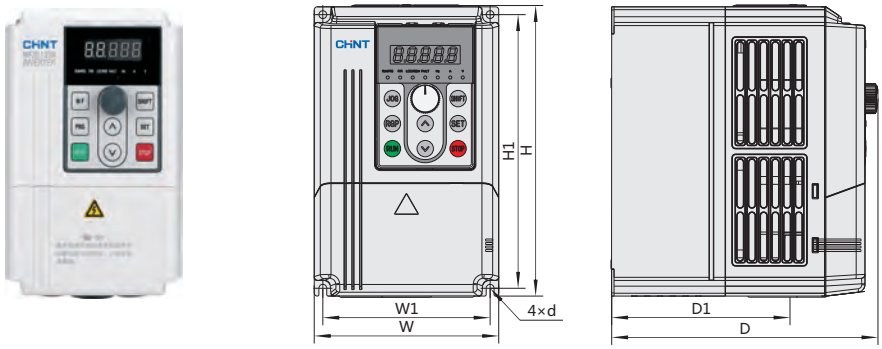

NVF3-11/TS4~NVF3-75/PS4 Outline Drawings

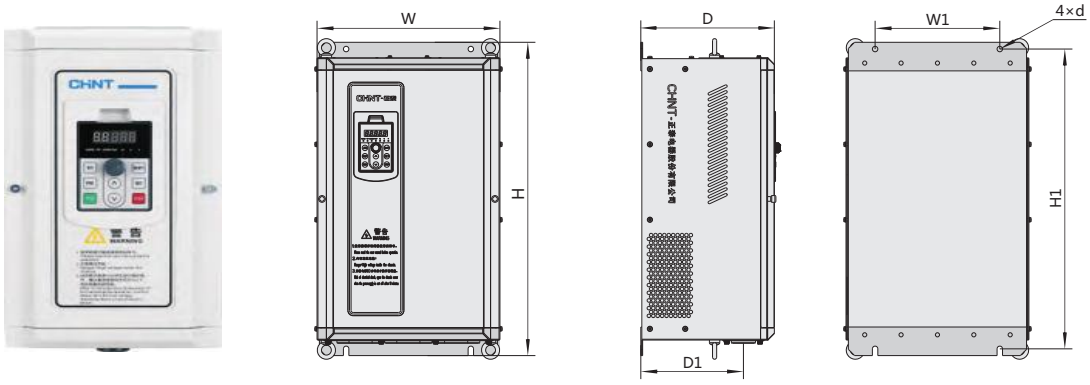

NVF3-75/TS4~NVF3-315/PS4 Outline Drawings

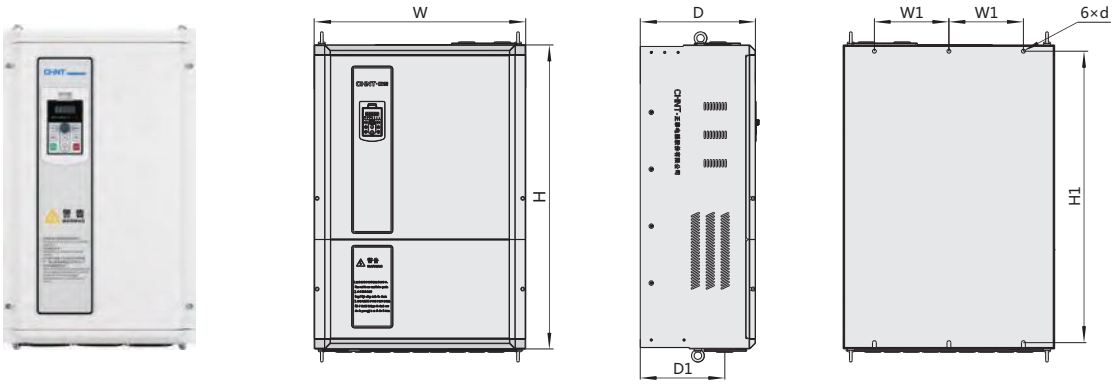

«Электро-Профи» - www.ep.ru

NVF3-315/TS4~NVF3-400/PS4 Outline Drawings

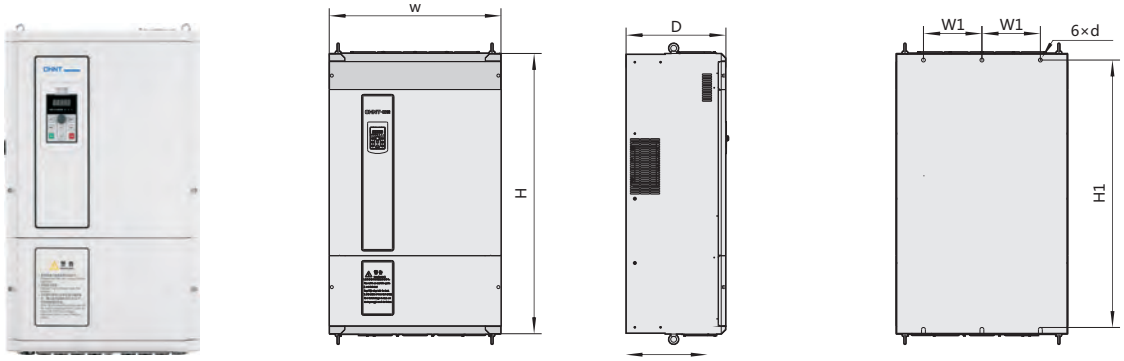

Model	Mounting Dimension(mm)						
	W	H	D	W1	H1	mounting hoeld	Weight(kg)
NVF3-1.5/PS4 NVF3-1.5/TS4 NVF3-2.2/PS4 NVF3-2.2/TS4 NVF3-3.7/PS4 NVF3-3.7/TS4 NVF3-5.5/PS4	118	187	173	107	175	Φ5	2.4
NVF3-5.5/TS4 NVF3-7.5/PS4 NVF3-7.5/TS4 NVF3-11/PS4 NVF3-11/TS4	155	247	189	140	232	Φ6	3.6
NVF3-15/PS4 NVF3-15/TS4 NVF3-18.5/PS4 NVF3-18.5/TS4	191	378	183	90	362	Φ9	10.5
NVF3-22/PS4 NVF3-22/TS4 NVF3-30/PS4 NVF3-30/TS4	215	426	213	120	407	Φ10.5	15
NVF3-37/PS4 NVF3-37/TS4 NVF3-45/PS4 NVF3-45/TS4	259	433	240	140	408	Φ10.5	26
NVF3-55/PS4 NVF3-55/TS4 NVF3-75/PS4	352	603	257	240	577	Φ10	34
NVF3-75/TS4 NVF3-90/PS4 NVF3-90/TS4 NVF3-110/PS4	406	631	272	126	600	Φ10	58
NVF3-110/TS4 NVF3-132/PS4 NVF3-132/TS4 NVF3-160/PS4	470	807	352	150	769	Φ12	108
NVF3-160/TS4 NVF3-185/PS4 NVF3-185/TS4 NVF3-200/PS4 NVF3-200/TS4 NVF3-220/PS4	540	892	390	180	848	Φ12	121
NVF3-220/TS4 NVF3-245/PS4 NVF3-245/TS4 NVF3-280/PS4 NVF3-280/TS4 NVF3-315/PS4	710	1020	386	250	978	Φ13	171
NVF3-315/TS4 NVF3-355/PS4 NVF3-355/TS4 NVF3-400/PS4 NVF3-400/TS4	734	1200	426	250	1152	Φ16.5	280

F

«Электро-Профи» - www.ep.ru

7. Optional peripheral devices

Optional device name	Roles of optional device
Circuit breaker for wiring	Protect the power supply system when a short circuit occurs. Be sure to connect it between the AC main circuit power supply and AC reactor. If there is no reactor, connect it to the front of the inverter.
AC input reactor	Improve the input power factors, reduce the higher harmonics, and suppress surges on the power supply of inverter.
DC reactor	1.Improve or suppress the distortion rate of grid voltage and current waveform caused by the charging and discharging pulse currents of the filter capacitor; 2.Reduce the total harmonic distortion and improve the quality of grid power supply.
AC output reactor	1. Effectively inhibit the noise level vibration of motor; 2. Effectively suppress the differential mode noise within 100 KHz on the inverter output side; 3. Effectively absorb the surge voltage.
Braking unit	1. Control the pumping-up of busbar voltage, and have a certain protection to inverter; 2. Improve the braking capacity of inverter in the need of frequent braking.
Braking resistor	Consume the mechanical energy in the motor braking process in the form of thermal energy through the braking resistor, which can shorten the deceleration time of the inverter drive system.
Keyboard pallet	The keyboard pallet is needed when the inverter operation panel needs to be installed on the door of control cabinet, or when the remote cabinet control is required.
Display extension cable	It is used as an extension cable when using remote monitoring or pulling out the operation panel.

Accessory Selection Table

Inverter	Selection of braking accessories			AC input reactor			AC output reactor			DC reactor		
NVF3-□/□□□	Braking unit configuration (10% braking rate)	Braking resistor		Configuration	Rated current (A)	Inductance (mH)	Configuration	Rated current (A)	Inductance (mH)	Configuration	Rated current (A)	Inductance (mH)
		Resistance (Ω)	Power (W))									
1.5/PS4、1.5/TS4	Standard built-in accessories of the braking unit (including 22/PS4 models)	400	260	Optional external accessorie	3.7	2.239	Optional external accessorie	3	2.1	No need to select DC reactor	—	—
2.2/PS4、2.2/TS4		250	260		5.5	2.18		6.3	1.5		—	—
3.7/PS4、3.7/TS4		150	390		9	1.85		11	1.1		—	—
5.5/PS4、5.5/TS4		100	520		13	1.56		16	0.8		—	—
7.5/PS4、7.5/TS4		75	780		18	1		18	0.65		—	—
11/PS4、11/TS4		50	1040		24	0.52		28	0.33		—	—
15/PS4、15/TS4		40	1560		34	0.397		35	0.25		—	—
18.5/PS4、18.5/TS4		32	4800		38	0.352		40	0.2		—	—
22/PS4、22/TS4	Optional built-in accessories of the braking unit (including 110/PS4 models)	27.2	4800		50	0.26		50	0.18	Optional external accessories (including 110/PS4 models)	70	0.9
30/PS4、30/TS4		20	6000		60	0.24		63	0.09		80	0.86
37/PS4、37/TS4		16	7000		75	0.235		80	0.08		100	0.7
45/PS4、45/TS4		13.6	9600		91	0.17		100	0.06		120	0.58
55/PS4、55/TS4		10	12000		112	0.16		125	0.04		146	0.47
75/PS4、75/TS4		6.8	12000		150	0.12		160	0.035		160	0.36
90/PS4、90/TS4		6.8	12000		200	0.0705		200	0.023		180	0.33
110/PS4、110/TS4	Optional external accessories of the braking unit	6	20000		224	0.0692		224	0.016	Standard external accessories	250	0.24
132/PS4、132/TS4		6	25000		280	0.0503		280	0.016		280	0.24
160/PS4、160/TS4		2.5	50000		315	0.0447		315	0.013		340	0.16
185/PS4、185/TS4					400	0.0352		400	0.011		460	0.09
200/PS4、200/TS4					400	0.0352		400	0.011		460	0.09
220/PS4、220/TS4					450	0.0313		560	0.009		500	0.82
250/PS4、250/TS4					560	0.0251		600	0.008		600	0.072
280/PS4、280/TS4					560	0.0251		600	0.008		600	0.072
315/PS4					640	0.0224		690	0.006		700	0.068

Picture of display extension cable and display panel pallet

Display extension cable



Display panel pallet





Note: If the inverter panel needs to be pulled out for operation, it should be specified when ordering and indicate the length of the display extension line.

«Электро-Профи» - www.ep.ru

8. Ordering instructions

Please select the required model and specifications according to the instructions of the model and meaning:
For example: Three-phase 380V typical type: NVF3-75/TS4
Three-phase 380V fan-pump type: NVF3-75/PS4
8.1 Model selection guide
8.1.1 In order to ensure the reliable operation of inverter, the power of inverter must be greater than or equal to the power of motor.
8.1.2 The typical type inverter is mainly used for loads other than fan and pump, such as crane, rolling mill, mixer, ball mill, centrifuge and other heavy loads.
8.1.3 The fan-pump type inverter is mainly used for light loads such as fan and pump. If the load running current is greater than 0.9 times the rated current, it is recommended to select the fan-pump type inverter with a larger gear or the typical type inverter with the same power.

9. Custom frequency conversion control cabinet

Various frequency conversion control cabinets can be customized according to requirements of the production process.



F

«Электро-Профи» - www.ep.ru



NJR2-T
Soft-Starter

1. General

NJR2-T series soft-starter is suitable for three-phase 220V voltage level soft starter, and is cored on advanced dual-CPU control technology. It controls SCR module, realizes soft starting & stopping of three-phase AC induction motor (squirrel cage type), and has wide range of protection functions e.g. overload, input phase failure, output phase failure, load short-circuit, starting limiting overtime, over-voltage, and under-voltage.

The products form into complete set mainly with control cabinet; and are mainly used supporting the bypass AC contactor with corresponding specifications. The product specifications cover 7.5KW ~160KW squirrel cage type three-phase AC induction motor; and widely used in electrical drive equipment in the fields of metallurgy, fire mining, water supply, municipal administration, food, cement and petrochemical. It is an ideal updated product of traditional star - delta starter, and self-coupling voltage starting.

Standard: GB 14048.6 IEC 60947-4-2.

2. Type designation

N J R 2-□ T

- T — Indicate soft starter control unit, three-phase 220V rating
- □ — Control motor power (kW)
- 2 — Design sequence No.
- R — Soft-starter
- J — AC motors
- N — Company code

3. Technical data

3.1 Power supply voltage: Three-phase AC220V (± 15%) 50Hz/60Hz (± 2%)

3.2 Starting current: 0.5 to 5 times the starting current limit

3.3 Ramp-down time: 0s ~ 60s

3.4 Base value voltage for soft starting: 30%Ue ~ 70% Ue

3.5 Kickstart Time: 0.1s

3.6 Environment requirements
Where the altitude is over 1000m, the capacity utilization should be reduced, current reduced by 0.5% for each additional 100m to 1000m;
Ambient temperature of -10℃~40℃(current is reduced by 3% for each 1℃ above 40℃);
Relative humidity less than 95%
Indoor environments featuring non-condensing, free of flammable and explosive gas, free of conductive dust, well-ventilated.

«Электро-Профи» - www.ep.ru

4. Wiring diagram

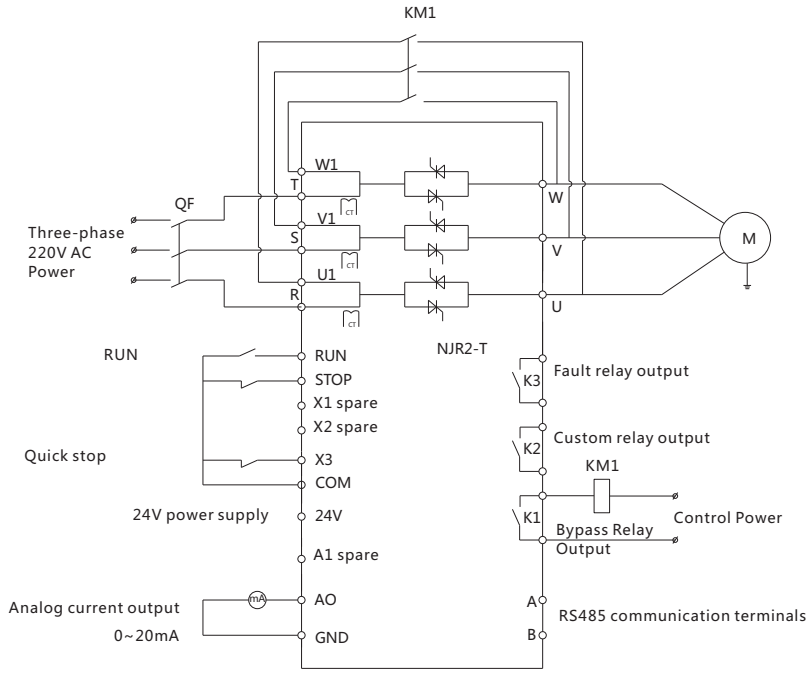

External terminal wiring instructions

B	RS485 communication terminals	When RS485 communication is required, please contact the manufacturer.
A	RS485 communication terminals	
GND	Analog ground	As the reference ground for A0 output
AO	(0 ~ 20) mA current output	GND as reference ground
A1	Spare terminals	
24V	+24 V output	Reference ground of COM, maximum output of 100mA
COM	Common terminal	Reference ground of +24 V
X3	quick stop terminal	Connecting with COM when factory default , once disconnect , output will be stopped with an “open circuit” fault
X2	Spare terminals	
X1	Spare terminals	
STOP	Stopping terminal	Can realize “two wire” and “three wire” control with COM
RUN	Running terminal	Can realize “two wire” and “three wire” control with COM
K3	Fault relay output, normally open Contact capacity (5A/250VAC)	When there is a fault, the relay picks up (0.2s pick-up time during power-up instant).
K2	Programmable relay outputs, normally open Contact capacity (5A/250VAC)	The relay function can be defined programmatically, when effective, the relay picks up.
K1	Bypass relay output, normally open; Contact capacity (5A/250VAC)	Control bypass contactor.

5. Features

5.1 Perfect Human Design:

5.1.1 The wide-body large LCD, the Chinese and English display, parameter setting, and equipment operation and control are made easier and simpler;

5.1.2 Advanced diverse soft starting mode can adapt to various types of starting demands of load devices;
Voltage starting mode

«Электро-Профи» - www.ep.ru

Step voltage + current limiting starting mode
Step voltage + voltage starting mode
Current ramp starting mode
Double-loop starting mode

5.1.3 Enable online display of the current operating voltage and current signals, and have fault name and memory function to facilitate commissioning and maintenance of equipment;
5.1.4 Full aluminum radiator patented design, better cooling effect, and natural ventilation, saving installation space;
5.1.5 Unique soft start master-slave linkage function, conducive to the production process control of equipment;
5.1.6 RS485 communication function, easy to control and automation networking engineered (to be customized).
5.2 Reliable Quality Assurance
5.2.1 Intelligent dual-CPU optimized design, so that the system operation is more stable and reliable;
5.2.2 SMT chip production process, reducing the failure rate of the circuit board;
5.2.3 Excellent Electromagnetic Compatibility;
5.2.4 High temperature aging test and load test of the machine ensure high reliability of manufactured products.
5.3 Perfect and Reliable Protection
5.3.1 Soft starter under-voltage, overvoltage protection;
5.3.2 Soft starter overheating, starting timeout protection;
5.3.3 Starting over-current, operating overload, load short circuit protection;
5.3.4 Input phase failure, output phase failure, and phase imbalance protection.

①



5.4 Removable keyboard,easy to operate outside remote operation control.(see ①)

②



5.5 all-aluminum design patent (75kW and below) gives better heat dissipation, natural air cooling, and saves space (see ②)

③



5.6 RS485 communication function (requiring extended RS485 communication module), facilitating networked control and automation engineered; providing three relay outputs: operation, ramp-top and failure for external linkage control. (See ③)
5.8 Unique master-slave linkage soft starting function, beneficial to production process control.

④



5.7 Display of operating voltage and current; fault description code display and memory function (see ④)

«Электро-Профи» - www.ep.ru

6. Overall and mounting dimensions (mm)

Display box

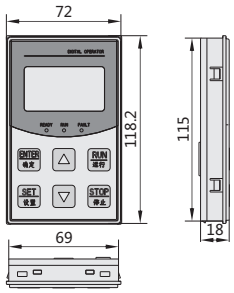

NJR2-7.5T~22T

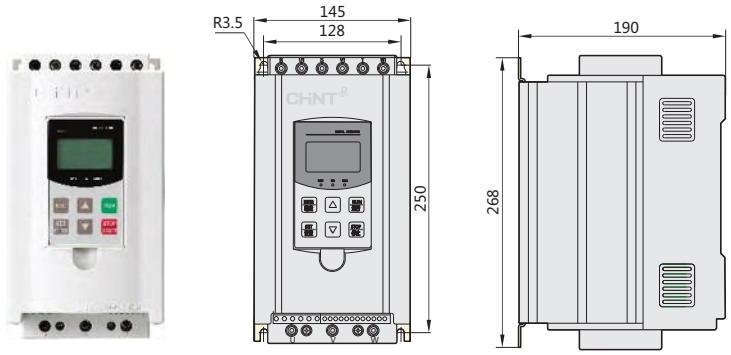

Model	Rated Current (A)	Power of controlled motor(kW)	Weight (kg)
NJR2-7.5T	30	7.5	5
NJR2-11T	44	11	
NJR2-15T	60	15	
NJR2-18.5T	74	18.5	
NJR2-22T	88	22	

F

NJR2-30T~37T

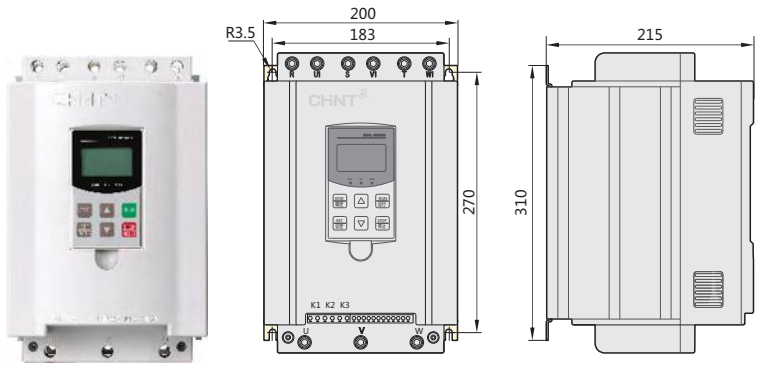

Model	Rated Current (A)	Power of controlled motor(kW)	Weight (kg)
NJR2-30T	120	30	8
NJR2-37T	148	37	

«Электро-Профи» - www.ep.ru

NJR2-45T~90T



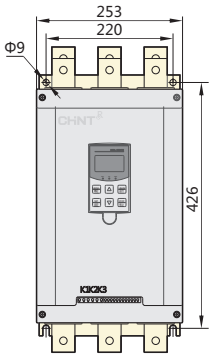

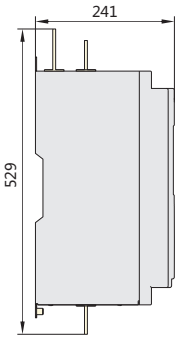

Model	Rated Current (A)	Power of controlled motor(kW)	Weight (kg)
NJR2-45T	180	45	20
NJR2-55T	220	55	
NJR2-75T	300	75	
NJR2-90T	360	90	

NJR2-110T~160T



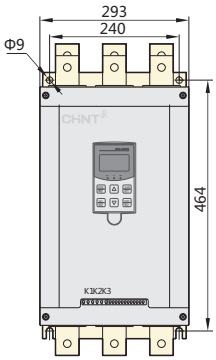

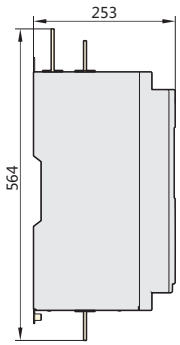

Model	Rated Current (A)	Power of controlled motor(kW)	Weight (kg)
NJR2-110T	440	110	25
NJR2-132T	528	132	
NJR2-160T	640	160	

7. Ordering information

7.1 Please select the required model and specification according to the instructions on model and meaning when ordering.
Example: The controlled motor power of 45kW is installed and used with soft starting cabinet or matching distribution cabinet.
Ordering model: NJR2-45T

7.2 When motor with more than 4 poles is used with soft starter, recommend to select one size larger.
Example: the controlled motor power 55kW is installed and used with soft starting cabinet or matching distribution cabinet.
Ordering model: NJR2-110T

7.3 When bipolar motor is used with soft starter, as the starting current is large, please set the parameters correct as per the instruction manual before use.

«Электро-Профи» - www.ep.ru



NJR2-D
Soft-Starter

1. General

NJR2-D series soft-starter is cored on advanced dual-CPU control technology. It controls SCR module, realizes soft starting & stopping of three-phase AC induction motor, and has wide range of protection functions e.g. overload, input phase failure, output phase failure, load short-circuit, starting limiting overtime,over-voltage, and under-voltage.

NJR2-D series soft-starter requires external bypass contactorwith voltage range of 380V, power specifications for 7.5KW to 500KW; has characteristics of good load adaptability,stable and reliable operation, and widely used in electrical drive equipment in the fields of metallurgy, petroleum,fire, mining, water supply, municipal, food, cement and petrochemical. It is an ideal updated product of traditionalstar - delta starter, and self-coupling voltage starting.

Standard: GB 14048.6 IEC 60947-4-2.

2. Type designation

N J R 2-□ □

- D: control unit
- Control motor power (kW)
- Design sequence No.
- Soft-starter
- AC motors
- Company code

3. Technical data

3.1 Mains voltage: Three-phase AC 380V (± 15%)

3.2 Mains frequency:50Hz/60Hz(± 2%))

3.3 Applicable motor: three phase squirrel cage induction motor

3.4 Pollution degree: 3

3.5 Protection class:IP20

3.6 Rated insulation voltage:660V

3.7 Rated impulse withstand voltage:2kV

3.8 Cooling: Natural cooling

3.9 Starting frequency: Recommended no more than 10 times per hour, the heavier the load, the less the starting frequency;

3.10 Shock resistance: shock less than 0.5g;

3.11 Environmental conditions: When the altitude is more than 1000m, used at reduced capacity, current is reduced by 0.5% for each additional 100m above 1000m;

3.12 When ambient temperature is between (-10 ~ 40) ℃, current is reduced by 2% for each 1℃ more than 40 ℃;

3.13 Relative humidity less than 95% (20 ~ 65) ℃;

3.14 No condensation, no flammable gas, no conductive dust, well ventilated.

3.15 Soft starting time
Soft stopping time
Starting delay
Starting interval delay
Programmable Output Delay

3.16 Startup mode: six kinds
Shutdown mode: two kinds

3.17 Initial voltage for soft starting
Soft-starting current limiting scope
Soft stopping current limiting scope

F

«Электро-Профи» - www.ep.ru

4. Wiring diagram

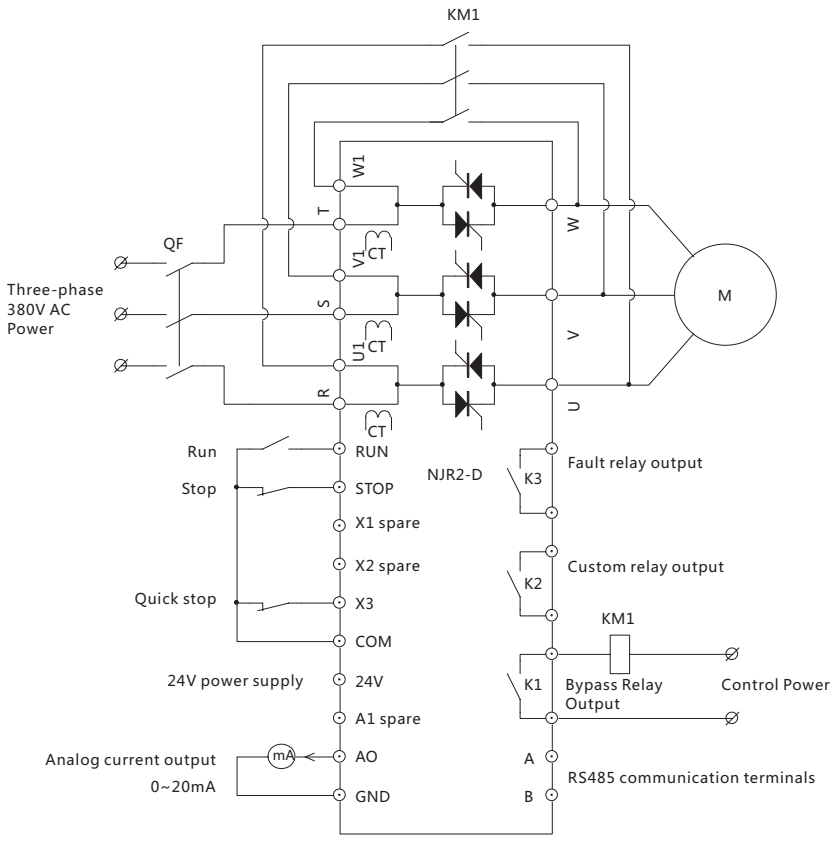

External terminal wiring instructions

B	RS485 communication terminals	When RS485 communication is required, please contact the manufacturer.
A	RS485 communication terminals	
GND	Analog ground	As the reference ground for A0 output
AO	(0 ~ 20) mA current output	GND as reference ground
A1	Spare terminals	
24V	+24 V output	Reference ground of COM, maximum output of 100mA
COM	Common terminal	Reference ground of +24 V
X3	Quick stop terminal	Connecting with COM when factory default , once disconnect , output will be stopped with an “open circuit” fault
X2	Spare terminals	
X1	Spare terminals	
STOP	Stopping terminal	Can realize “two wire” and “three wire” control with COM
RUN	Running terminal	Can realize “two wire” and “three wire” control with COM
K3	Fault relay output, normally open Contact capacity (5A/250VAC)	When there is a fault, the relay picks up (0.2s pick-up time during power-up instant).
K2	Programmable relay outputs, normally open Contact capacity (5A/250VAC)	The relay function can be defined programmatically, when effective, the relay picks up.
K1	Bypass relay output, normally open; Contact capacity (5A/250VAC)	Control bypass contactor.

«Электро-Профи» - www.ep.ru

5. Features

5.1 Perfect Human Design:
5.1.1 The wide-body large LCD, the Chinese and English display, parameter setting, and equipment operation and control are made easier and simpler;
5.1.2 Advanced diverse soft starting mode can adapt to various types of starting demands of load devices;
Voltage starting mode
Current-limiting starting mode
Step voltage + current limiting starting mode
Step voltage + voltage starting mode
Current ramp starting mode
Double-loop starting mode
5.1.3 Enable online display of the current operating voltage and current signals, and have fault name and memory function to facilitate commissioning and maintenance of equipment;
5.1.4 full aluminum radiator patented design, better cooling effect, and natural ventilation, saving installation space;
5.1.5 Unique soft start master-slave linkage function, conducive to the production process control of equipment;
5.1.6 RS485 communication function, easy to control and automation networking engineered (to be customized).
5.2 Reliable Quality Assurance
5.2.1 Intelligent dual-CPU optimized design, so that the system operation is more stable and reliable;
5.2.2 SMT chip production process, reducing the failure rate of the circuit board;
5.2.3 Excellent Electromagnetic Compatibility;
5.2.4 High temperature aging test and load test of the machine ensure high reliability of manufactured products.
5.3 Perfect and Reliable Protection
5.3.1 Soft starter under-voltage, overvoltage protection;
5.3.2 Soft starter overheating, starting timeout protection;
5.3.3 Starting over-current, operating overload, load short circuit protection;
5.3.4 Input phase failure, output phase failure, and phase imbalance protection.



5.4 Removable keyboard,easy to operate outside remote operation control.(see ①)

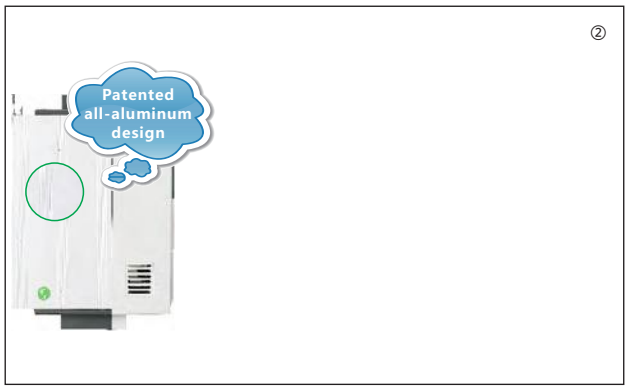

5.5 all-aluminum design patent (75kW and below) gives better heat dissipation, natural air cooling, and saves space (see ②)

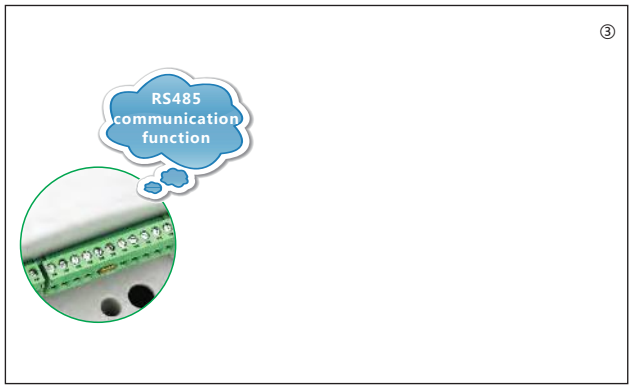

5.6 RS485 communication function (requiring extended RS485 communication module), facilitating networked control and automation engineered; providing three relay outputs: operation, ramp-top and failure for external linkage control. (See ③)

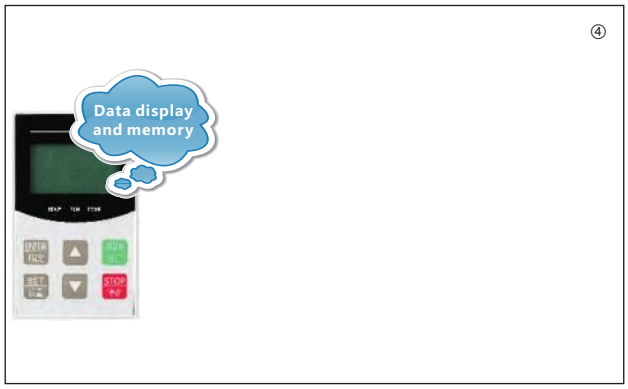

5.7 Display of operating voltage and current; fault description code display and memory function (see ④)
5.8 Unique master-slave linkage soft starting function, beneficial to production process control.

F

«Электро-Профи» - www.ep.ru

6. Overall and mounting dimensions (mm)

Display box

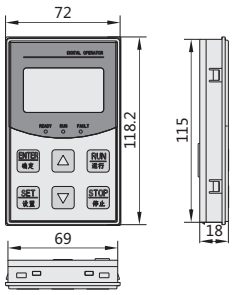

NJR2-7.5D~45D



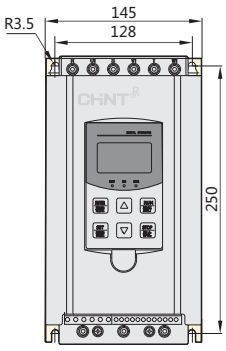

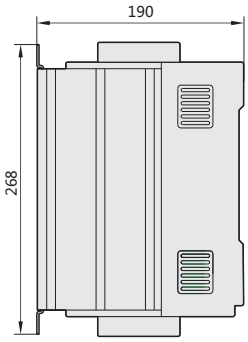

Model	Rated Current (A)	Power of controlled motor(kW)	Weight (kg)
NJR2-7.5D	15	7.5	5
NJR2-11D	22	11	
NJR2-15D	29	15	
NJR2-18.5D	36	18.5	
NJR2-22D	42	22	
NJR2-30D	57	30	
NJR2-37D	70	37	
NJR2-45D	84	45	

NJR2-55D~75D



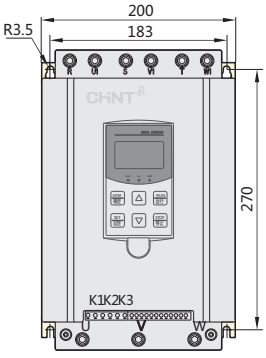

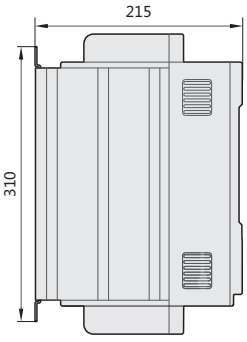

Model	Rated Current (A)	Power of controlled motor(kW)	Weight (kg)
NJR2-55D	103	55	8
NJR2-75D	140	75	

«Электро-Профи» - www.ep.ru

NJR2-90D~185D



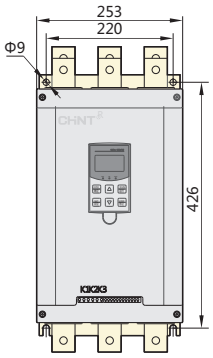

Model	Rated Current (A)	Power of controlled motor(kW)	Weight (kg)
NJR2-90D	167	90	20
NJR2-110D	207	110	
NJR2-132D	248	132	
NJR2-150D	280	150	
NJR2-160D	300	160	
NJR2-185D	349	185	

NJR2-220D~315D



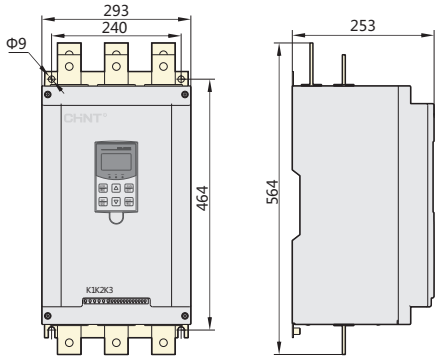

Model	Rated Current (A)	Power of controlled motor(kW)	Weight (kg)
NJR2-220D	404	220	25
NJR2-250D	459	250	
NJR2-280D	514	280	
NJR2-315D	579	315	

NJR2-355D~500D



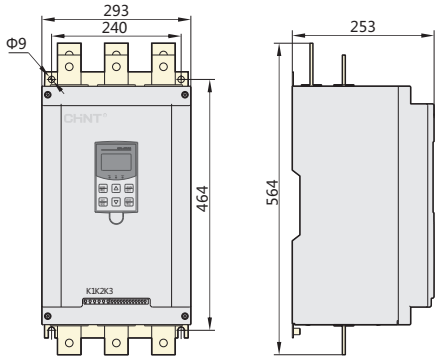

Model	Rated Current (A)	Power of controlled motor(kW)	Weight (kg)
NJR2-355D	634	355	52.5
NJR2-400D	720	400	
NJR2-450D	810	450	
NJR2-500D	900	500	

F

7. Ordering information

7.1 Please select the required model and specification according to the instructions on model and meaning when ordering.
Example: The controlled motor power of 45kW is installed and used with soft starting cabinet or matching distribution cabinet.
Ordering model: NJR2-45D (to be connected with the bypass contactor with corresponding specifications)

7.2 When motor with more than 4 poles is used with soft starter, recommend to select one size larger.
Example: the controlled motor power 75kW is installed and used with soft starting cabinet or matching distribution cabinet.Ordering model: NJR2-90D (to be connected with the bypass contactor with corresponding specifications)

7.3 When bipolar motor is used with soft starter, as the starting current is large, please set the parameters correct as per the instruction manual before use.

7.4 For heavy load application, recommend the use of soft starter one grade larger.

«Электро-Профи» - www.ep.ru



NJR2-ZX
On-line Soft-Starter

1. General

NJR2-ZX Series on-line soft-starter is cored on advanced dual-CPU control technology. It controls SCR module, realizes soft starting & stopping of three-phase AC induction motor (squirrel cage type), and has wide range of protection functions e.g. overload, input phase failure, output phase failure, load short-circuit, starting limiting overtime, over-voltage, and under-voltage.

After starting motor, the product does not require bypass contactor, with power specifications covering 7.5KW ~75KW; widely used in electrical drive equipment in the fields of metallurgy, fire, mining, water supply, municipal administration, food,cement and petrochemical.

It is an ideal updated product of traditional star - delta starter, and self-coupling voltage starting.

Standard: GB 14048.6,IEC 60947-4-2.

2. Type designation

N J R 2-□ ZX

- On-line
- Control motor power (kW)
- Design sequence No.
- Soft-starter
- AC motors
- Company code

3. Technical data

3.1 Power supply voltage: Three-phase AC380V (± 15%) 50Hz/60Hz (± 2%)

3.2 Starting current: 0.5 to 5 times the starting current limit

3.3 Ramp-down time: 0s ~ 60s

3.4 Base value voltage for soft starting: 30%Ue ~ 70% Ue

3.5 Kickstart Time: 0.1s

3.6 Environment requirements

Where the altitude is over 1000m, the capacity utilization should be reduced, current reduced by 0.5% for each additional 100m to 1000m;

Ambient temperature of -10℃~40℃ (current is reduced by 3% for each 1℃ above 40℃);

Relative humidity less than 95%

Indoor environments featuring non-condensing, free of flammable and explosive gas, free of conductive dust, well-ventilated.

«Электро-Профи» - www.ep.ru

4. Wiring diagram

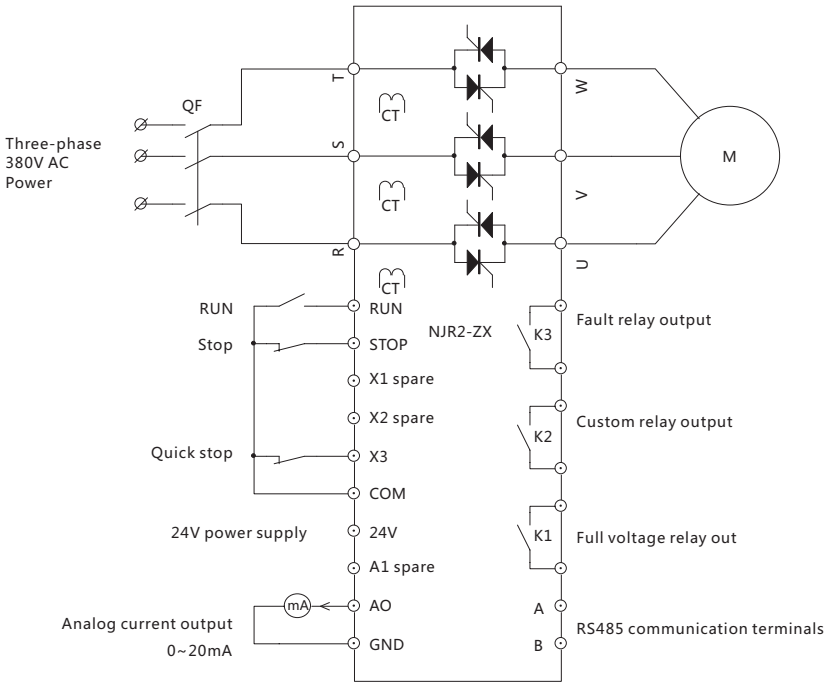

External terminal wiring instructions

B	RS485 communication terminals	When RS485 communication is required, please contact the manufacturer.
A	RS485 communication terminals	
GND	Analog ground	As the reference ground for A0 output
AO	(0 ~ 20) mA current output	GND as reference ground
A1	Spare terminals	
24V	+24 V output	Reference ground of COM, maximum output of 100mA
COM	Common terminal	Reference ground of +24 V
X3	Quick stop terminal	Connecting with COM when factory default , once disconnect , output will be stopped with an “open circuit” fault
X2	Spare terminals	
X1	Spare terminals	
STOP	Stopping terminal	Can realize "two wire"and "three wire"control with COM
RUN	Running terminal	Can realize "two wire"and "three wire"control with COM
K3	Fault relay output, normally open Contact capacity (5A/250VAC)	When there is a fault, the relay picks up (0.2s pick-up time during power-up instant).
K2	Programmable relay outputs, normally open Contact capacity (5A/250VAC)	The relay function can be defined programmatically, when effective, the relay picks up.
K1	Bypass relay output, normally open; Contact capacity (5A/250VAC)	Control bypass contactor.

F

«Электро-Профи» - www.ep.ru

5. Features

5.1 Long-time online operation without requiring bypass contactor, saving installation space.
5.2 Intelligent Digital Dual SCM optimized control
5.3 Diversified advanced soft starting
5.3.1 voltage starting mode
5.3.2 Current limiting starting mode
5.3.3 Kick voltage + current limiting start mode
5.3.4 Kick voltage + voltage starting mode
5.3.5 Current ramp starting mode
5.3.6 Dual closed-loop starting mode
5.4 Built-in overload, input phase failure, output phase failure, load short-circuit, start current limiting timeout, over-voltage, under-voltage overheating and other protection functions.

①



②



5.5 Wide-body large LCD displays are in both Chinese English, the operation is more humane and the operation and parameter settings are more simple and man-machine dialogue is achieved (see ① ②)

③



④



5.6 Display of operating voltage and current; fault code display and memory function (see ③)
5.7 RS485 communication function (requiring extended RS485 communication module), facilitating networking control and automation engineered; providing three relay outputs: operating, ramp-top and failure for external linkage control. (see ④)
5.8 Unique master-slave linkage soft starting function, facilitating production process control of equipment.

6. Overall and mounting dimensions (mm)

Display box

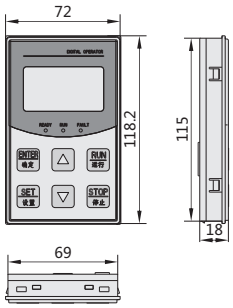

NJR2-7.5ZX~37ZX



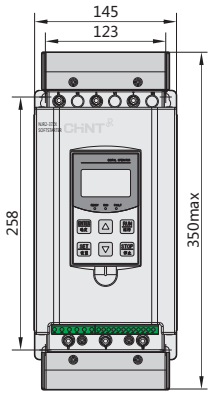

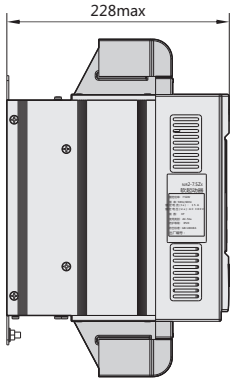

Model	Rated Current (A)	Power of controlled motor(kW)	Weight (kg)
NJR2-7.5ZX	15	7.5	7
NJR2-11ZX	22	11	
NJR2-15ZX	29	15	
NJR2-18.5ZX	36	18.5	
NJR2-22ZX	42	22	
NJR2-30ZX	57	30	
NJR2-37ZX	70	37	

NJR2-45ZX~75ZX



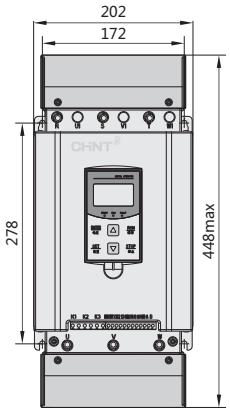

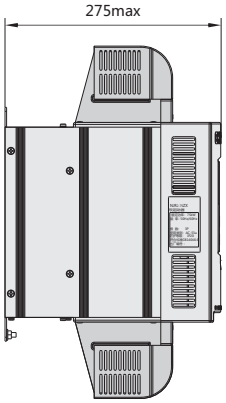

Model	Rated Current (A)	Power of controlled motor(kW)	Weight (kg)
NJR2-45ZX	84	45	11
NJR2-55ZX	103	55	
NJR2-75ZX	140	75	

F

7. Ordering information

7.1 Please select the required model and specification according to the instructions on model and meaning when ordering.
Example: The controlled motor power of 45kW is installed and used with soft starting cabinet or matching distribution cabinet.
Ordering model: NJR2-45ZX

7.2 When motor with more than 4 poles is used with soft starter, recommend to select one size larger.
Example: the controlled motor power 55kW is installed and used with soft starting cabinet or matching distribution cabinet.
Ordering model: NJR2-75ZX

7.3 When bipolar motor is used with soft starter, as the starting current is large, please set the parameters correct as per the instruction manual before use.

7.4 For heavy load application, recommend the use of soft starter one grade larger.

«Электро-Профи» - www.ep.ru

Relays

smaller size, bigger function



«Электро-Профи» - www.ep.ru



«Электро-Профи» - www.ep.ru

CHINT ELECTRIC

Relay

Protection Relay



NJB1-YW
Floatless Relay

Page P-001



NJB1-X Relay
(Three-Phase Unbalance, Phase Sequence, Phase FailureProtection)

Page P-002



NJB1-X1 Relay
(Three Phase Sequence, Phase Failure Protection)

Page P-003



NJB1-S
Time Delay Relay

Page P-004



NJBK10
Motor Protection Relay

Page P-006



NJBK7
Motor Protection Relay

Page P-011



NJBK6
Motor Protection Relay

Page P-015



NJBK1
Series Motor Protector

Page P-017



NJBK2
Motor Protection Relay

Page P-020



NJBK5
Motor Controller

Page P-024



NJBK5-5
Motor Controller

Page P-027



JD-5A
Integrated Motor Protector

Page P-030



JD-5E
Integrated Motor Protector

Page P-033



JD-5
Integrated Motor Protector

Page P-036



JD-8
Integrated Motor Protector

Page P-039



NJYB3
Relay

Page P-041



NJYB1
Phase-Failure and Phase-Sequence Protection Relay

Page P-044



XJ3
Phase-Failure and Phase-Sequence Protective Relay

Page P-045

Control Relay



NJS1-H
Time Delay Relay

Page P-047



NJS1-M
Time Delay Relay

Page P-051



NJS1
Time Delay Relay

Page P-055



NJS5
Time Delay Relay

Page P-057



NJS5-M2
Time Relay

Page P-059



NJS3
Time Relay

Page P-061



NTE8
Time Delay Relay

Page P-063



JSS48A
Time Delay Relay

Page P-065

«Электро-Профи» - www.ep.ru

CHINT ELECTRIC

Relay

Control Relay



JSZ3
Time Delay Relay
Page P-068



JSZ6
Time Delay Relay
Page P-071



NKG3
Time Switch
Page P-072



NKG3-M
Time Switch
Page P-074



NKG1
Time Switch
Page P-076



KG10D
Time Switch
Page P-078



KG10M
Time Switch
Page P-080



KG316T
Time Switch
Page P-081



NJJ7-H
Counting Relay
Page P-083



NJJ5-J
Electronic Counter
Page P-087



NJJ5-L
Electronic Timer
Page P-089



NJJ3
Counting Relay
Page P-091



NJJ7-M
Counting Relay
Page P-095



JDM15G
Counting Relay
Page P-099



JDM1-48
Counting Relay
Page P-102



JDM3
Electronic Counter
Page P-104



SC3L
Electronic Timer
Page P-106



NJYW1
Floatless Relay
Page P-108

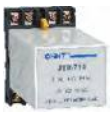

JYB-714
Floatless Relay
Page P-110



NJA1-KG
Smart Relay
Page P-112



NJA1-L
Smart Relay
Page P-114



Socket
Page P-116

General Purpose Relay



NJX-13FW
Miniature Power Relay
Page P-119



NJDC-17
Small Electromagnetic Relay with Test Button
Page P-122



JQX-13F
Miniature High-power Electromagnetic Relay
Page P-126



JZX-22F
Miniature Power Relay
Page P-126

«Электро-Профи» - www.ep.ru

Relay

General Purpose Relay



NJDC-12
Small Electromagnetic Relay with Test Button

Page P-133



JQX-10F
Miniature Power Relay

Page P-136



JTX
Miniature Power Relay

Page P-138



JMK
Miniature Power Relay

Page P-140



NJX2
Miniature Electro-Magnetic Relay

Page P-142



NJX3
Small-scale Electromagnetic Relay

Page P-146



Socket

Page P-148



NJMC1
Pulse Relay

Page P-152



NCC2
Magnetic Latching Relay

Page P-154

«Электро-Профи» - www.ep.ru



NJB1-YW Floatless Relay

1. General

NJB1-YW Floatless Relay is applicable for water level automatic control in industrial facilities & equipments, civil water tower, high cistern, underground conservation pool, etc.
The control of automaitic water supply or drainage may be achieved by a simgle operation of the function switch without modifying the user's connectiong conditons.
This product is not applicable for water level control of flammable and explosive liquid, such as oil, chemical liquid, etc.

2. Type designation

N JB 1 - YW/□

- Rated voltage of control power supply
- Function code: floatless relay
- Design sequence No.
- Relay
- Company code

3. Technical data

Type	NJB1-YW
Operating mode	Continuous operating
Contact number	1 Switching
Contact capacity	Ue/Ie:AC-15 220V/0.75A,380V/0.47A;Ith:3A
Operating voltage	AC 50Hz/60Hz 36V, 110V, 220V, 380V, (other voltage may be custom made)
Voltage between electrodes	DC12V
Power consumption	Max value about 3VA
Operation resistance	5kΩ~100kΩ(adjustable)
Resetting resistance	250kΩmax
Response time	0.1s~10s(adjustable)
Cable length	Max length 100m
Indication mode	Green LED: power supply indication; red LED:relay operation indication
Ambient temperature	-5℃~+40℃
Installation mode	Equipment or Track Type

4. Operating time-sequence diagram and wiring diagram

NJB1-YW operation time-sequence diagram

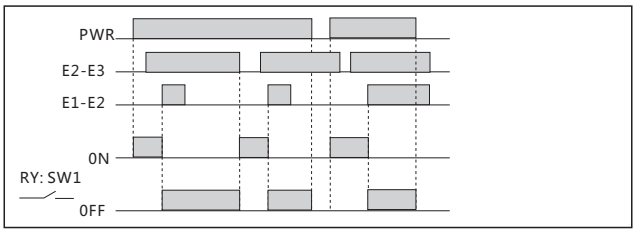

NJB1-YW wiring diagram

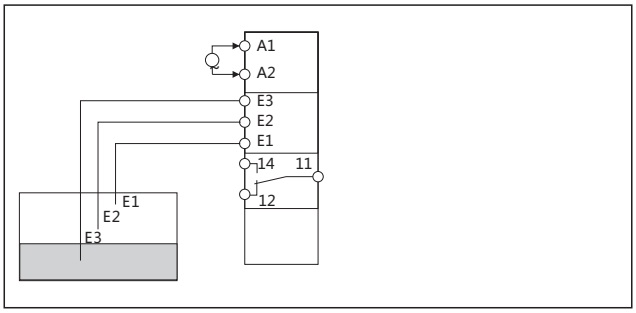

5. Overall and mounting dimensions (mm)

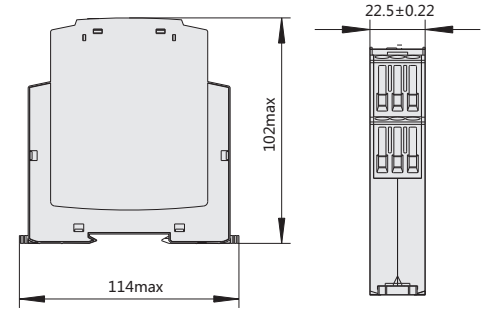

«Электро-Профи» - www.ep.ru



NJB1-X Relay (Three-Phase Unbalance, Phase Sequence, Phase Failure Protection)

1. General

NJB1-X relay (hereinafter called relay) are applied in AC380V~480V control circuits at a frequency of 50Hz as protection elements of phase sequence, phase failuire and phase unbalance,making or breaking circuits.The relay with the true effective value of three phase AC voltatage provides more reliable operating protection. The products meet the requirements of standard IEC 60947-5-1.

2. Type designation

N JB 1 - □/□

- Rated control supply voltage
- Function code: X: Unbalance, Phase Sequence, Phase Fall Protection.
- Design S. N.
- Relay
- Enterprise code

3. Technical data

Type	NJB1-X
Operating voltage	Three-phase, three-line mode: 380, 400, 415, 480VAC Three-phase, four-line mode: 220, 230, 240, 277VAC
Three-phase unbalance Operation	Unbalance rate: 2%~22%
Unbalance Operation time	(0.1~30)s adjustable
Contact number	1 Switching
Contact capacity	Ue/Ie:AC-15 240V/0.75A,415V/0.47A;Ith:3A
Indication mode	Power supply: green LED, delay output: yellow LED, alarm indication: red LED
Ambient temperature	-5℃~+40℃
Installation mode	Equipment type or track type

4. Overall and mounting dimensions (mm)

NJB1-X

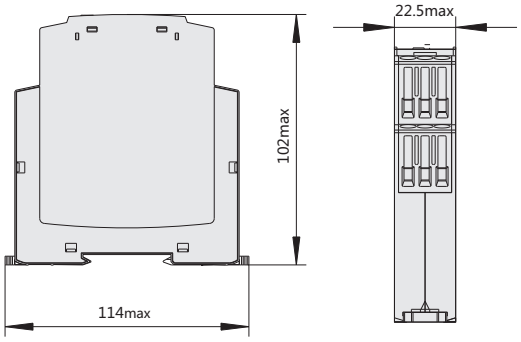

5. Wiring diagram

NJB1-X

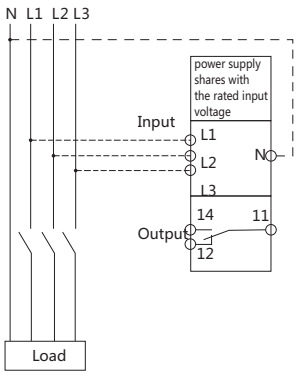

G

«Электро-Профи» - www.ep.ru



NJB1-X1 Relay (Three Phase Sequence, Phase Failure Protection)

1. General

NJB1-X1 relay (phase sequence, phase failure protection) is used as an phase sequence and phase failure protection device in control circuits with an AC voltage of 200V~500V and a frequency of 50Hz to make and break the circuit. It cannot monitor the phase failure of motor load.

2. Type designation

N JB 1 - X1

- X1: Function code: X1: phase sequence, phase failure relay
- 1: Design sequence No.
- JB: Relay
- N: Company code

3. Operating conditions

3.1 Rated operational voltage: 200V AC~500V AC

3.2 Operation time: phase sequence, phase failure ≤ 0.1s

3.3 Contact capacity:
Ue/Ie: AC-15 220V/0.75A, 380V/0.47A;
Ith: 3A

3.4 Mounting type: rail type, installation type

3.5 Power consumption: ≤3VA

3.6 Note: In normal operation, the NO contact of the relay is closed, the operation indicator is on.

4. Wiring diagram

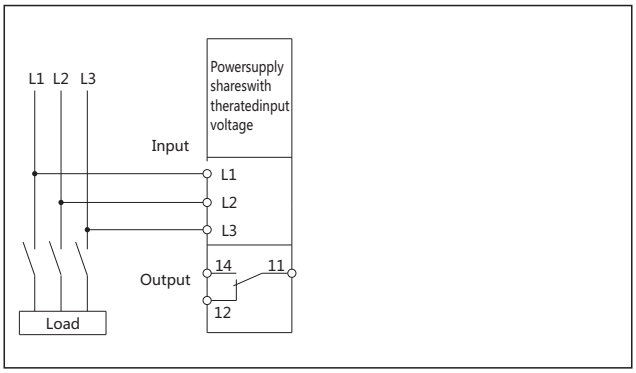

5. Overall and mounting dimensions (mm)

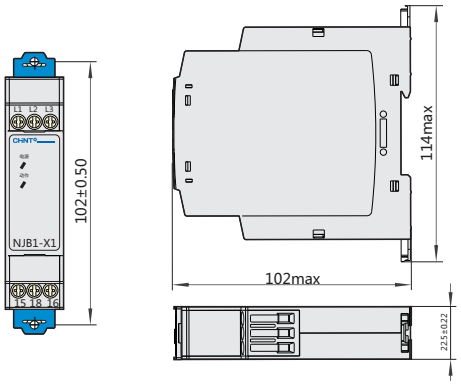

«Электро-Профи» - www.ep.ru



NJB1-S Time Delay Relay

1. General

NJB1-S series time relay is suitable for being as the time control and indicator elements in the control circuit with the AC frequency of 50Hz/60Hz, rated control supply voltage to 380V and DC control supply voltage to 24V, to connect or break off the circuit at a predetermined time.
NJBI-S time-delay relay is used in controlling circuit as time delay element to make or break circuit according to preset time.

2. Type designation

N JB 1 - □/□

- Rated supply voltage
- Feature code: S: Time-delay relay
- Design sequence No.
- Relay
- Company code

3. Technical data

Type	NJB1-S
Operation mode	Delayed ON operation/Interval operation/Recycle operation
Contact number	Delay 1 Switching
Contact capacity	Ue/Ie:AC-15 220V/0.75A,380V/0.47A,Ith:3A
Operating voltage	AC220V AC380V 50Hz/60Hz DC24V (other size may be custom made)
Electrical Endurance	1×10^5
Mechanical Endurance	1×10^6
Delay precision	5%
Ambient temperature	-5℃~+40℃
Installation mode	Track mouning
Delay range	Code name: 2,5,10,20,50,100,120 (time unit: s/min/h, optional) Range: 0.2~2,0.5~5,1~10,2~20,5~50,10~100,12~120 Note: delay range and time unit may be selected through selection switch

G

«Электро-Профи» - www.ep.ru

4. Wiring diagram

NJB1-S wiring diagram

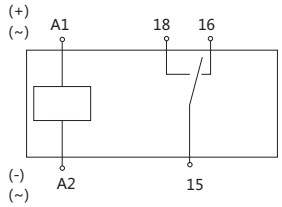

5. Overall and mounting dimensions (mm)

NJB1-S

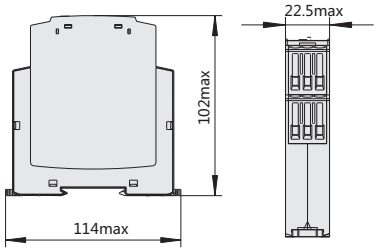

NJB1-S

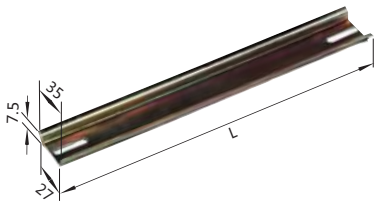

Use TH35-7.5 steel mounting rail for Installation

6. Timing-sequence diagram

Mode 1: Delayed ON operation

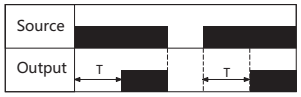

Mode 2: Interval operation



Mode 3: Symmetrical recycling OFF cycle first

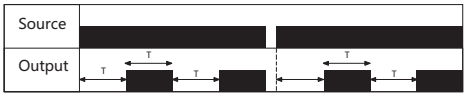

Mode 4: Symmetrical recycling ON cycle first

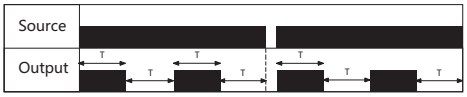

«Электро-Профи» - www.ep.ru



NJBK10
Motor Protection Relay

1. General

NJBK10 series motor protection relay (hereinafter referred to as the protector) suitable for AC 50Hz, rated insulation voltage up to 690V and under, rated working current 1A-200A long-term or intermittent AC motor work overload, open-phase, three-phase imbalance protection. Product meets IEC60947-4-1 standard requirements

2. Type designation

N JBK 10 - □/□

- Control supply voltage
- Rated current specifications: 10:1 A-10A, 50:5A-50A, 200:20A-200A
- Design sequence No.
- Motor protection relay
- Company code

3. Operating conditions

3.1 Altitude: not exceed 2000m;

3.2 the surrounding air temperature of -5 ° C - +40 ° C, and the average value within 24h does not exceed +35 ° C;

3.3 atmospheric conditions: the highest temperature of +40 ° C, relative air humidity not exceeding 50%, lower temperatures can be allowed to have a higher relative humidity, for example, air humidity up to 90% at +20° C, and special measures should be taken against the condensation occasionally due to temperature changes;

3.4 Pollution level: 3;

3.5 Mounting surface and the vertical gradient of not more than ± 5 °;

3.6 In medium without danger of explosion and medium gas not enough to corrode metal or destroy insulation and where much conductive dust exist;

3.7 Places with anti-rain and snow equipment and not full of water vapor;

3.8 in the absence of significant shake, shock and vibration;

3.9 Installation Category: Ⅱ;

3.10 Electromagnetic Environment: A;

3.11 Casing protection grade: IP20.

G

CE

«Электро-Профи» - www.ep.ru

4. Technical data

4.1 Main circuit: Rated insulation voltage AC690V Rated frequency 50Hz, rated operating current of 1A-200A.

Table 1

Model	Rated current specification	Rated current range A	Suitable for motor power kW
NIBK10-10	10	1A-10A	0.5kW-5kW
NJBK10-50	50	5A-50A	2.5kW-25kW
NJBK10-200	200	20A-200A	10kW-100kW

4.2 Auxiliary circuit: Rated insulation voltage AC380V Rated frequency 50Hz, auxiliary contacts parameters

Table 2

Utility Category	Rated current range A		
Rated operating voltage (V)	240		380
Rated operating current (A)	1.5		0.95
Conventional thermal current (A)		5	

5. Structural characteristics

5.1 Double-row LED display, the upper row of LED displays running current, bottom row of LED displays set current, the indicator lights indicate the operating status and fault status;

5.2 Features overload given time protection (on/off), inverse time overload protection, open-phase, three-phase current unbalance protection function;

5.3 Built-in 4 overload curves are available to meet different occasions;

5.4 Panel with start and stop buttons, terminal block can be external connected with start and stop buttons with simplified wiring;

5.5 Auto-start function can open the auto-start function and set the start-up delay. In case of power resumption or reset after power failure, the protector start automatically as per the set auto start delay, free of any human intervention;

5.6 Fault memory and its indications: In case of motor failure, the indicator displays the fault type, while the bottom row LED flashes and displays the fault code;

5.7 Mouning mode: screw mounting.

6. Protection characteristics

6.1 Inverse time operation characteristic

When the current value exceeds the 1.1 times the set current value, the protector will start the inverse overload protection function. The protector shall simulate the calculation of the motor heat accumulation and movement time according to the overload current multiples. When the heat accumulation reaches a certain value, the protector acts to cut off the AC contactor, so as to protect the motor.

The relationship between the overload current and the time are shown in Table 3, Figure 1.

Table 3 inverse time operation characteristic table

Overload curve \ Overload multiple / Action time (s)	1.05	1.2	1.5	2	5	6	7.2	Remark
Kr=1	No action	63	40	22	3.6	2.5	1.8	Meet the 5 level
Kr=2	No action	125	80	45	7.2	5	3.5	Meet the 10 level
Kr=3	No action	250	160	90	14	10	6.9	Meet the 10 level
Kr=4	No action	500	320	180	29	20	14	Meet the 20 level
Kr=5	No action	750	480	270	43	30	21	Meet the 30 level

«Электро-Профи» - www.ep.ru

6.2 phase failure and unbalanced action time 3s, with a relative error of ± 10%, unevenThe balance rate can be set, unbalance ratio is calculated as follows:

$$\text{Unbalanced ratio} = \frac{\max_{i=1}^{3}|I_i - I_{avg}|}{I_{avg}} \times 100\%$$

Where:

I_i - Each phase current RMS

I_{avg} - Three-phase current average

Figure 1 time - current characteristic curve

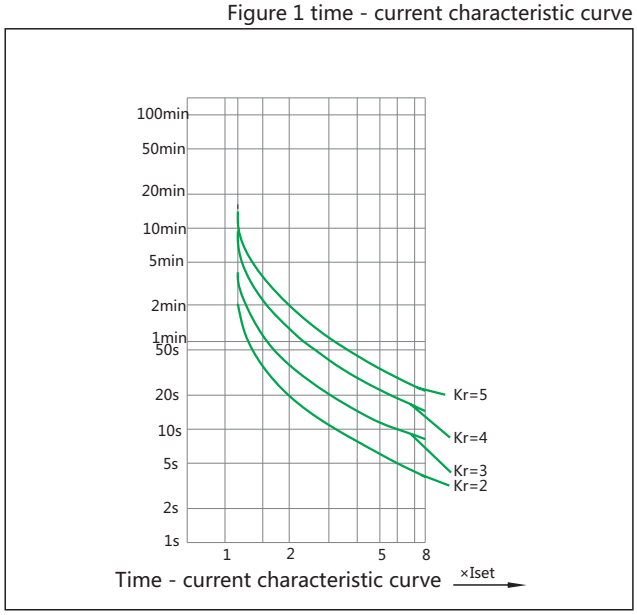

6.3 definite time operation characteristic

When definite time function is open, set definite time overload magnification and definite time time, if the running current ≥ set overload current × magnification and exceeds the set definite time, the protector shall act, as shown in Figure 2.

Figure 2 Definite time characteristic diagram

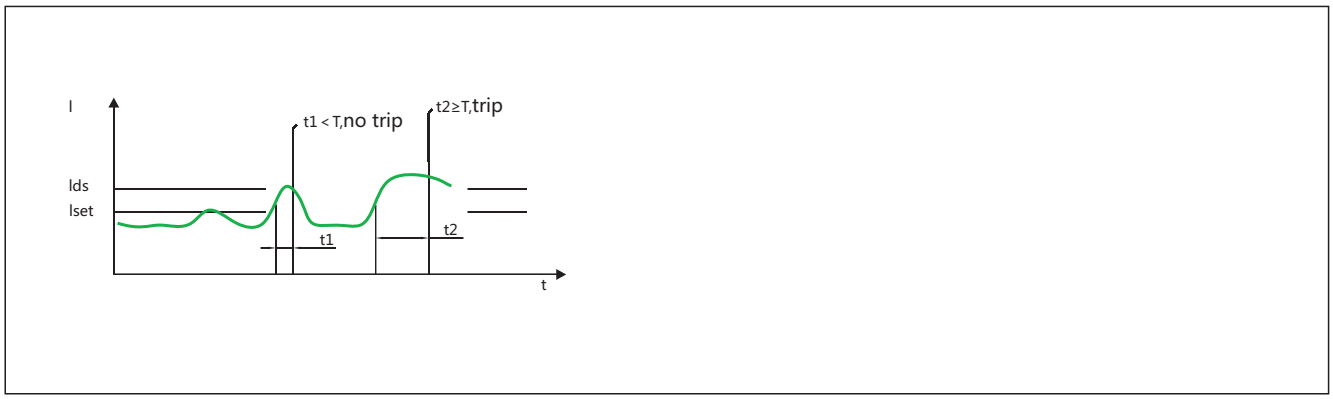

Note: Iset expresses the set current

Ids = Iset × definite time magnification T expresses the set definite time

G

«Электро-Профи» - www.ep.ru

7. Wiring diagram

7.1 Control power voltage AC220V wiring diagram in Figure 3 Control power voltage AC380V wiring diagram in Figure 4.

Figure 3 control supply voltage AC220V wiring diagram

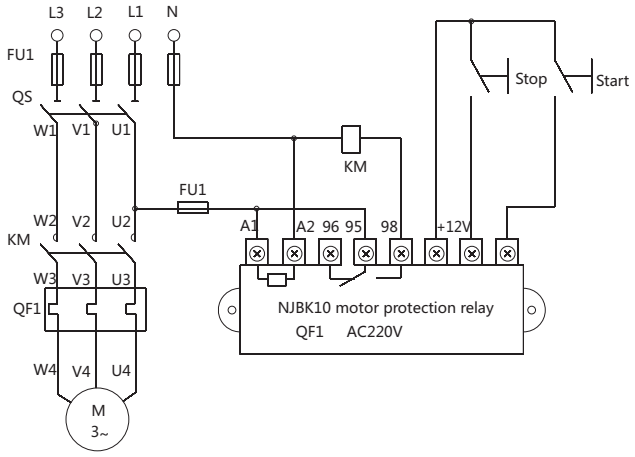

Figure 4 Control supply voltage AC380V wiring diagram

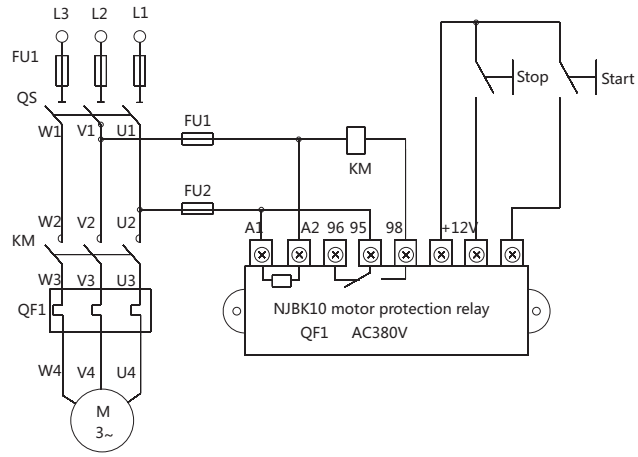

«Электро-Профи» - www.ep.ru

8. Overall and mounting dimensions (mm)

Figure 5 Outside shape and dimensions

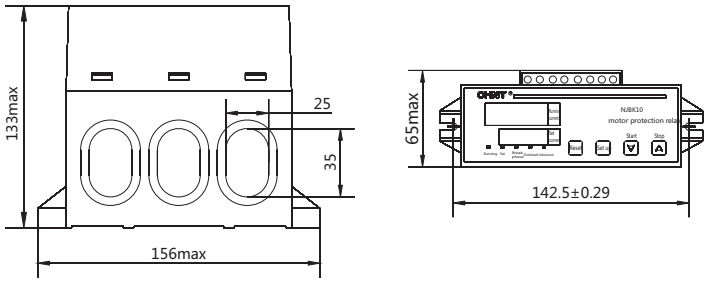

9. Ordering information

9.1 Description and model specifications of the protector, the control supply voltage (AC220V, AC380V) selected according to the requirements for use.
Setting current range (1A-10A, 5A-50A, 20A-200A);

9.2 Ordering Quantity.

G

«Электро-Профи» - www.ep.ru



NJBK7 Motor Protection Relay

1. General

NJBK7-800 series motor protection relay (hereinafter referred to as "Protector") is applicable for overload protection,locked rotor protection,phase failure protection, three-phase imbalance protection,undercurrent protection,grounding protection , PTC temperature protection and communication failure protection for AC electromotors of a frequency of 50Hz with a rated insulation voltage of up to 690V and a rated operating current of 1A～800A during long-term and discontinuous operation, This protector is provided with RS485 interface and 4mA～20mA current loop transmitter interface for network communication and performs remote monitor control on the motor and fault query through opper computer. This protector is usually used to combine with AC contactor.
This product conforms to IEC60947-4-1.

CE

2. Type designation

N JBK 7 - 800 □ □ / □ / □

- Control power supply voltage (AC220V、AC230V,AC240V,AC380V,AC400V,AC415V)
- Rated current: 5,10,40,100,400,800
- None: communication interface is not available
  T: RS485 interfac
- None: 4mA～20mA analog transformation is not available
  M: 4mA～20mA analog transmission
- Specification code
- Design sequence No.
- Motor protection relay
- Company code

3. Operating conditions

3.1 Altitude: Not more than 2000m.

3.2 Ambient air condition: -5℃～+40℃, and the average value in 24 hours shall not exceed +35℃.

3.3 When the maximum temperature is +40℃, the relative humidity of air shall not exceed 50% and higher relative humidity is allowable at lower temperature comparatively (e.g the air humidity may reach 90% when the temperature is +20℃). Special measures shall be taken to deal with occasianal condensation caused by variation in temperature.

3.4 Pollution class: 3.

3.5 The slope degree between installing and verical plane shall not exceed ±5°.

3.6 Explosion hazard-free media, in which there are no gasses that are capable of corroding metals and damage the insulation and not conducting dust.

3.7 Areas with rain-and-snow-proof equipment and without water vapor.

3.8 Areas without noticeable shaking, impact and vibration.

3.9 Installation class: Ⅲ.

3.10 Enclosure protection class:IP20.

4. Technical data

4.1 Main circuit: Rated insulatin voltage AC690V and rated frequency is 50Hz, rated impulse withstand voltage 1.2/50μs、4kV , rated current 1A～800A.

Model	rated current (A)	current setting range (A)	Appropriate motor power (kW)
NJBK7-800□□/5/□	5	1～5	0.5～2.5
NJBK7-800□□/10/□	10	2～10	1～5
NJBK7-800□□/40/□	40	8～40	4～20
NJBK7-800□□/100/□	100	20～100	10～50
NJBK7-800□□/400/□	400	80～400	40～200
NJBK7-800□□/800/□	800	200～800	100～400

«Электро-Профи» - www.ep.ru

4.2 Auxiliary circuit: Rated insulation voltage is AC480V,and the rated frequency is 50Hz,rated impulse withstand voltage 1.2/50μs、2.5kV.

Application class	AC-15	
Rated operating voltage Ue (V)	240	480
Rated operating current Ie (A)	1.5	0.75
Rated thermal current Ith (A)	5	

4.3 Structural features

4.3.1 Set the parameters by button with current、trip level、locked rotor 、start delay ,etc.

4.3.2 Show the information by LED display with current、setting parameters、malfunction ,etc.

4.3.3 Show the current status (running、malfunction、stop、set) by LED display.

4.3.4 Start、stop、star delta can be controlled by one key.

4.3.5 Overload protection,locked rotor protection,phase failure protection, three-phase imbalance protection,undercurrent protection, grounding protection , PTC temperature protection and communication failure protection are available.

4.3.6 The host adopted panel installation while the transformer is rail installation or by screw.

4.3.7 The terminals are pluggable that is easy for connecting.

4.3.8 Abundant current specification , suit for motors with different power.

4.3.9 4mA ~ 20mA current loop transmitter interface.

4.3.10 Modbus communication function , monitor and control in long distance.

4.3.11 Power consumption: ≤3VA.

5. Protection characersitics

5.1 Operating characteristics of overload protection

Overload multiple / Overload curve / Operation time (s)	1.05	1.2	1.5	2	5	6	7.2	Note
Kr=1	No action	63	40	22	3.6	2.5	1.8	In conformity with Class 5
Kr=2	No action	125	80	45	7.2	5	3.5	In conformity with Class 10A
Kr=3	No action	250	160	90	14	10	6.9	In conformity with Class 10
Kr=4	No action	500	320	180	29	20	14	In conformity with Class 20
Kr=5	No action	750	480	270	43	30	21	In conformity with Class 30

5.2 Rotor locking operation characteristic

If the maximum current ≥ setting current value × set multiplying factor for rotor locking, the protector will operate, and the actuation time will be the set actuation time for rotor locking.

5.3 Phase failure operation characteristic

If the current value of any phase of the three phases is 25% lower than the current that is setting,the protector will operate with the actuation time ≤3s.

5.4 Current imbalance operation characteristic

If the three-phase current value of main loop conforms to following formula, the protector will operate, with the actuation time≤3s.

$$\frac{M^{3}ax\ |Ii-Iavg|}{Iavg} \times 100\% \geq \text{Set current unbalancerate}$$

Hereinto: Ii- Effective value per phase current

Iavg- Mean value of the three phases of currents

5.5 Undercurrent protection characteristic

If the minimum current ≤ setting current value × set multiplying factor for undercurrent, the protector will operate, and the actuation time will be the set actuation time for undercurrent.

5.6 Ground protection operation characteristic

The protector performs ground fault protection through the external zero-sequence transducer. When the zero-sequence current is in range of (0.9 ~ 1.1)set current , the protector will operate, with the actuation time ≤1s.

Tripping characteristic curve

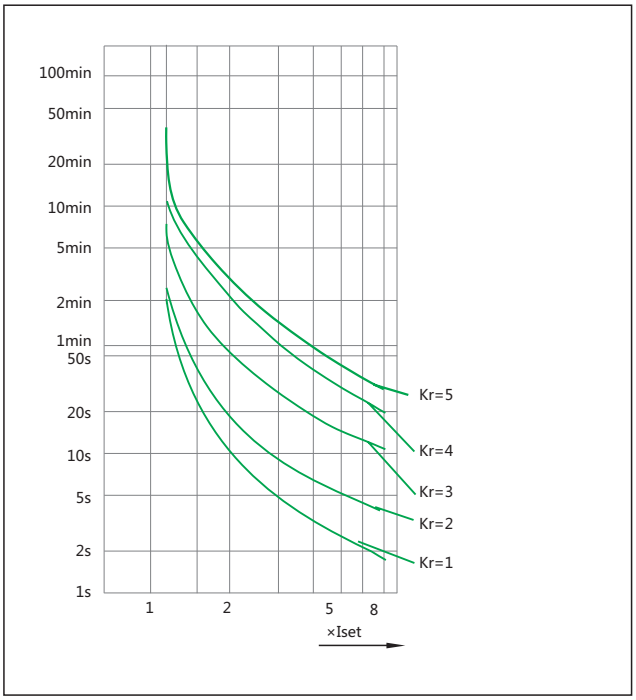

G

«Электро-Профи» - www.ep.ru

5.7 Temperature protection feature

The protector performs overheating protection by detecting the resistance of PTC thermal resister built in stator winding of the motor. If the resistance of PTC thermal resister is ≤750Ω，the protector will not actuate. If the resistance of PTC thermal is rising from 1650Ω to 4000Ω，the protector will actuate,with the actuation time≤1s. If the resistance of PTC thermal is from 750Ω to 1650Ω,the protector can be reset.If you do not want to use this function ，the terminals T1、T2 should be short linked.

5.8 Communication failure protection characteristic

The protector is connected with transformer by cable ，if the cable drop off or damaged，the protector will protect ,action time ≤3s.

5.9 Communication. the protector is provided with RS485 interface supporting Modbus protocol. If the communication network is required, please contact us, and we'll provide you with detailed communication specification for protector.

6. Typical wiring

Figure1 Wiring diagram for direct start

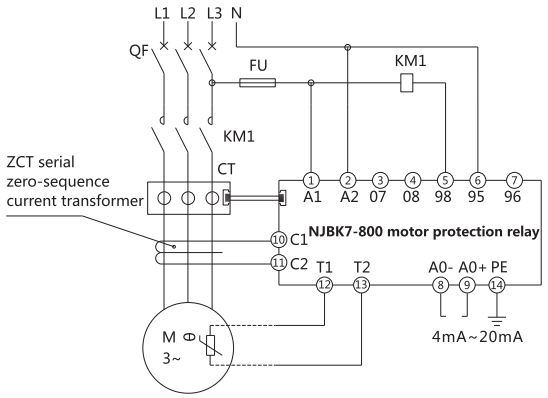

Figure2 Wiring diagram for secondary-current direct start

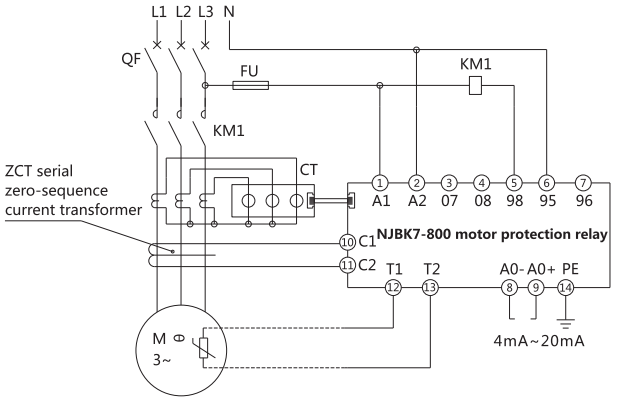

Figure3 Wiring diagram for star delta start

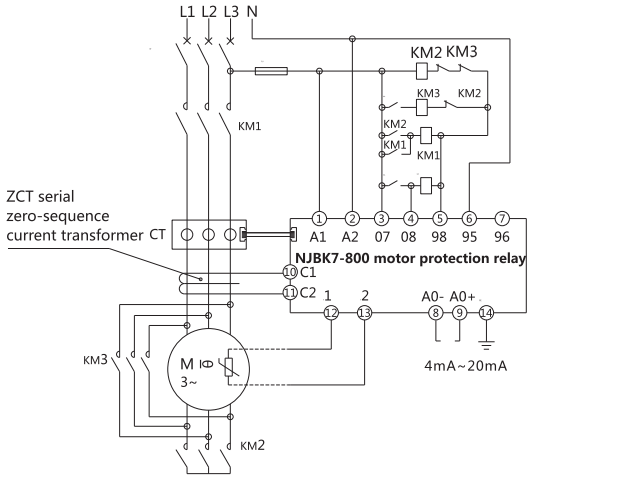

Figure4 Wiring diagram for auto voltage-reduction start

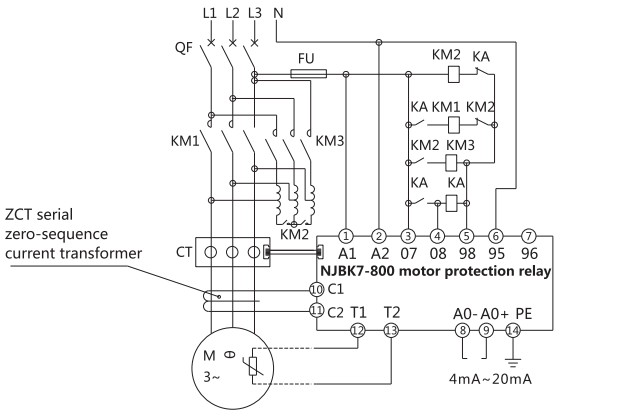

7. Outline drawing

Figure5 Outline drawing of current specification with 5A,10A,40A

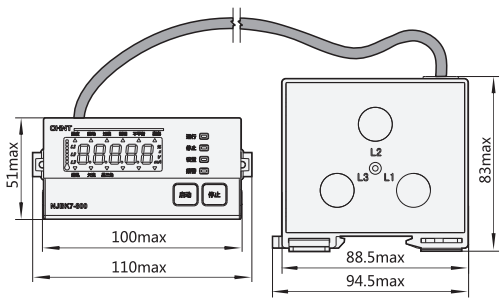

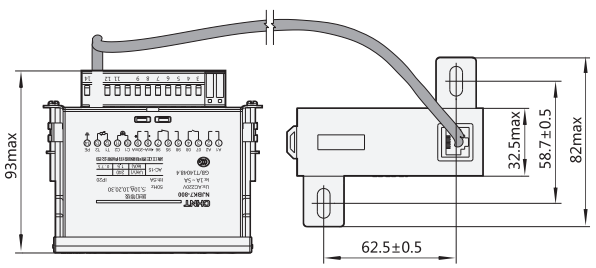

Figure6 Outline drawing of current specification with 100A

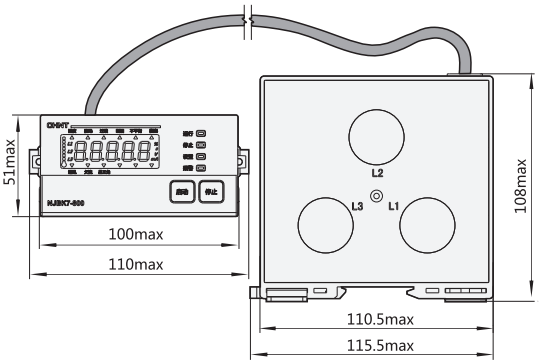

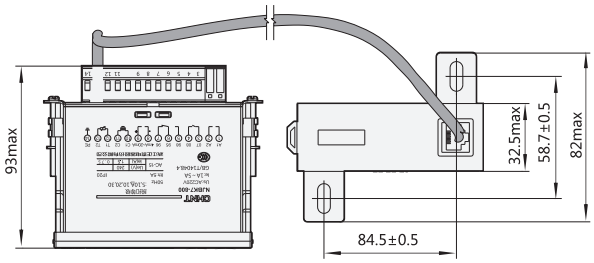

Figure7 Outline drawing of current specification with 400A,800A

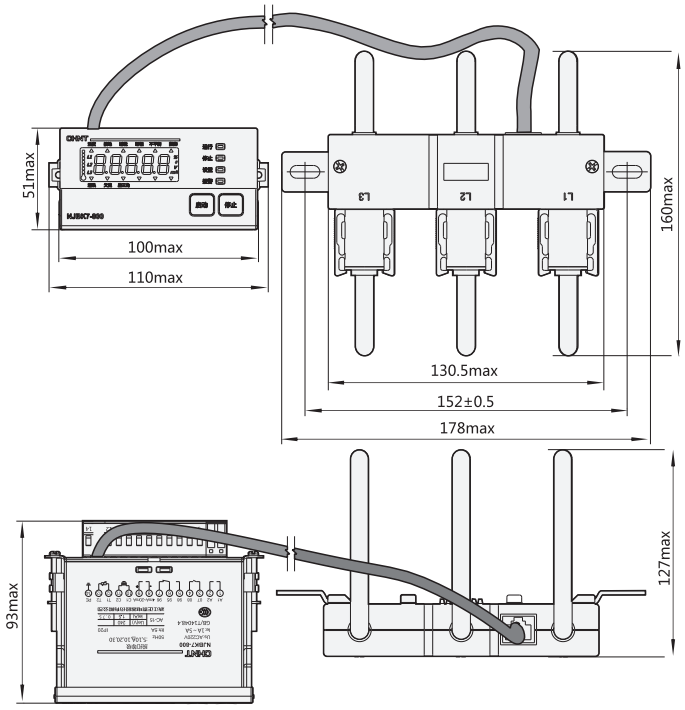

Figure8 Installation method 1 for Rogowski coil

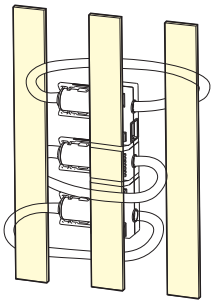

Figure9 Installation method 2 for Rogowski coil

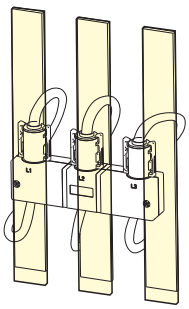

Figure10 Opening size

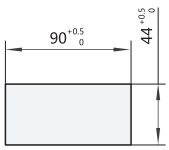

G

«Электро-Профи» - www.ep.ru



NJBK6
Motor Protection Relay

1. General

NJBK6 series motor protection relay is used to provide overload, phase failure, three-phase current unbalance and locked rotor protection for AC motors with a frequency of AC 50Hz, a rated insulation voltage of below 690V and a rated operational current of 1A~36A that operate continuously or intermittently.
Standards: IEC 60947-4-1

CE

2. Type designation

N JBK 6 - 36 / □ / □

- Rated control supply voltage
- Setting current code
- Frame size
- Design sequence No.
- Motor protection relay
- Company code

3. Operating conditions

3.1 Altitude: should not exceed 2000m;

3.2 Ambient tempeature: -5℃~+40℃, and the average temperature in 24h should not exceed +35℃ ;

3.3 Atmospheric conditions: The relative air humidity should not exceed 50% at the maximum temperature of +40℃. The relative humidity may be higher at lower temperatures, for example, the air humidity can be up to 90% at +20℃. Special measures should be taken if condensation occurs on the product occasionally due to temperature variation;

3.4 Pollution degree: 3;

3.5 The inclination between the mounting plane and the vertical plane should not exceed ±5°;

3.6 In non-explosive media that do not contain a sufficient amount of gas or conductive dust to cause metal corrosion or insulation failure;

3.7 In places with rain and snow protection equipment and not full of vapor;

3.8 In places where there is no significant shake, impact or vibration;

3.9 Mounting category: Ⅲ

4. Technical data

4.1 Main data and technical characteristics

No.	Setting current range	Model of matching contactor	Matching motor power
NJBK6-36/3/□	1A~3A	CJX2-25/NC1-25	0.5kW~1.5kW
NJBK6-36/9/□	3A~9A	CJX2-25/NC1-25	1.5kW~4.5kW
NJBK6-36/24/□	8A~24A	CJX2-25/NC1-25	4kW~12kW
NJBK6-36/36/□	12A~36A	CJX2-32/NC1-32	6kW~18kW

4.2 Technical data of main circuit
Rated operational current: 1A~36A,
rated insulation voltage: 690V, rated frequency: 50Hz;

4.3 Technical data of control circuit
Number of contacts: 1 group of change-over contacts;
Contact capacity: Ue/Ie: AC-15 380V/0.95A, 240V/1.5A;
Ith: 5A; Rated frequency: 50Hz;

4.4 Technical data of auxiliary circuit
Control supply voltage: AC 220×(1±10%)V,
AC 380×(1±10%)V; Rated frequency: 50Hz;

4.5 Operating characteristics

4.5.1 The operating characteristics of overload protection are given in Table 2

No.	Setting current multiple	Operation time	Starting conditions	Starting conditions
1	1.05	No operation within 2h	Cold state	+20℃
2	1.2	Operation within 2h	Hot Start	+20℃
3	1.5	Operation within 2min	Hot Start	+20℃
4	7.2	2s<Tp≤10s	Cold state	+20℃

«Электро-Профи» - www.ep.ru

4.5.2 Operating characteristic of phase failure protection

The protector will actuate within 3s if any of the three phases of main circuit currents is open and its relative error is ±20%.

4.5.3 Operating characteristic of unbalance protection of three phases of currents

The protector will actuate within 3s if the three phases of main circuit currents meet following two formulas at the same time and its relative error is ±20%.

$$\frac{\max_{i=1}^{3} |Ii - Iavg|}{Iavg} \times 100\% > 30\%$$

Hereinto:

Ii- Effective value per phase current

Iavg- Mean value of the three phases of currents

4.5.4 Operating characteristic of latching protection

The latching current of the protector is set as 6Ie. When the main circuit current is larger than the latching current, the protector will deferthe actuation, and its actuation time is 3s and its relative error is ±20%.

4.6 Reset characteristics

After the operation of the protector, if the control supply voltage is normal, the protector can be reset manually; if the control supply voltage is off, the protector resets immediately.

5. Connection diagram

The connection diagrams in case the control supply voltage is AC220V and AC380V are shown in Figure 1 and Figure 2.

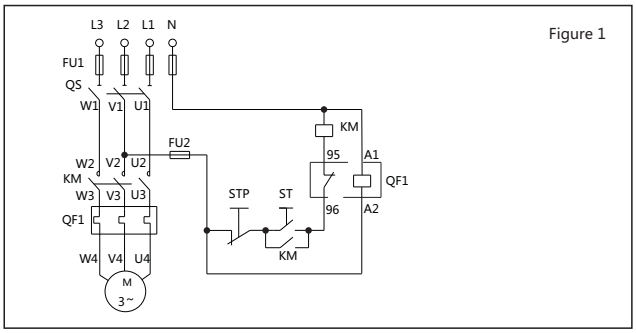

Figure 1

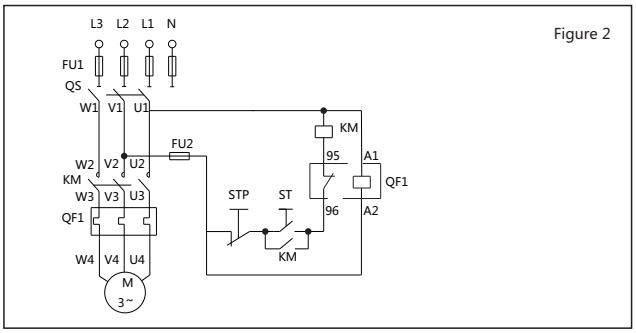

Figure 2

6. Installation and commissioning

6.1 Before installation, read the operating instructions carefully. Then, connect the wires in accordance with the connection diagram.

6.1.1 Terminals A1 and A2 are the control power supply input terminals of the protector; 95 and 96 are the output control terminals (N/C), 95 and 98 are N/O contacts.

6.1.2 Plug the protector into the outlet terminal of the contactor and connect the control circuit in accordance with Figure 2 and Figure 3.

6.2 Adjustment of setting current value

Adjust the setting value of the protector using the setting knob with indicating arrow and the setting current value on the label plate according to the rated current marked on the motor nameplate and the load conditions of the motor. Adjust the setting current value of the protector to the scale equal to the rated current value marked on the motor nameplate.

6.3 Commissioning: After checking the connection and setting, switch on the power supply and operate the start button. The motor should run normally and the (green) running indicator on the protector panel should light up. If the red indicator flashes, finely adjust the setting value until the red indicator stops flashing.

7. Structure and principle

7.1 Operating principle: The protector detects the current of the main circuit of the motor by means of the current transformer and judge if overload or phase failure has occurred in the motor. In case of overload, it simulates the heat accumulation state of the motor by means of the singlechip and, when the heat accumulation reaches the set limit, disconnects the N/C contact of the built-in electromagnetic relay.

7.2 Structural features

7.2.1 Has phase failure, overload, three-phase current unbalance and locked rotor protection functions.

7.2.2 Has two indicators indicating running and fault states.

7.2.3 Has a setting curent quantified continuously adjustable device.

7.2.4 The main circuit uses plug-in connection for use in combination with the specified model of contactor.

8. Overall and mounting dimensions (mm)

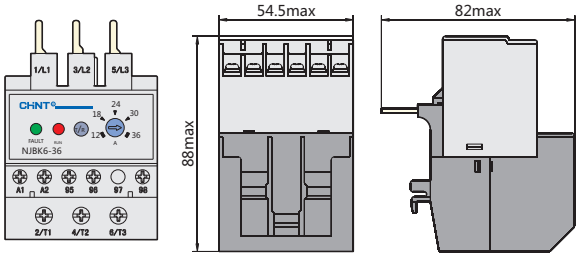

9. Environmental conditions for the storage of the protector

9.1 Temperature: -25℃~+40℃

9.2 Relative humidity (at 25℃): should not exceed 85%

9.3 Protect from rain and snow

9.4 The guaranteed storage period of the product is 18 months. Products exceeding the storage period must be reinspected before being put into use.

G

«Электро-Профи» - www.ep.ru



NJBK1 Series Motor Protector

1. General

NJBK1 series motor protector (hereinafter referred to as protector) is applicable to the overload, open-phase, three-phase current imbalance and other protection for the AC motors in long-term or intermittent operations with AC frequency at 50Hz, rated insulation voltage at 690V or below and rated operating current at 1A-400A.

2. Type designation

NJBK 1-□/□ □

- Rated control supply voltage (AC220V, AC380V)
- Setting current code(5: 1A~5A, 10:2A~10A,30:6A~30A, 80:16A~80A, 200:40A~200A, 400:80A~400A)
- Frame size: 80,400
- Design serial number
- Motor protector
- Enterprise characteristic code

3. Operating conditions

3.1 Altitude: No more than 2000m.

3.2 Ambient air temperature is -5℃~+40℃,and the average value within 24h shall not exceed+35℃.

3.3 Atmospheric conditions: When the maximum temperature is + 40 ℃,the air relative humidity shall not exceed 50%, and a higher relative humidity is allowable at lower temperatures, for example: at +20℃,the air humidity can reach 90%, and special measures shall be taken to condensation occasionally produced due to temperature changes.

3.4 Class of pollution: 3.
3.5 Inclination between the mounting surface and vertical plane shall not exceed±5°.

3.6 In places without explosion hazard media and no enough gases to corrode the metal and damage the insulation in the media and more conducting dust.

3.7 In places equipped with rain and snow prevention equipment and without steam.

3.8 In places without significant shake, shock and vibration.

3.9 Installation category: Ⅲ.

3.10 Electromagnetic environment: Environment B.

3.11 Shell protection grade: IP20.

3.12 Rated duty: Uninterrupted duty or eight-hour day working system.

«Электро-Профи» - www.ep.ru

4. Technical data

4.1 Main circuit: Rated insulation voltage: AC690V; rated frequency: 50Hz.

Model	Rated current: A	Setting current range: A	Suitable motor power: kW
NJBK1-80/5	5	1-5	0.5～2.5
NJBK1-80/10	10	2-10	1～5
NJBK1-80/30	30	6-30	3～15
NJBK1-80/80	80	16-80	8～40
NJBK1-400/200	200	40-200	20～100
NJBK1-400/400	400	80-400	40～200

4.2 Auxiliary circuit: Rated insulation voltage: AC380V; rated frequency: 50Hz; use category, rated working voltage, rated operating current and conventional thermal current.

Use category	AC-15		
Rated operating voltage (V)	240		380
Rated operating current (A)	1.5		0.95
Conventional thermal current(A)		5	

5. Structure characteristic

5.1 Structure characteristic

5. 1.1Knob setting current value and trip grade.

5.2 LED displays the current value, setting state, fault code and other information about the maximum phase.

5.3 With overload inverse time-lag protection, open-phase protection, three-phase current unbalance protection and other functions.

5.4 5 optional built-in overload curves,meet the use at different occasions.

5.5 Test / Reset: Operating status, press "Test / Reset" button for a short time to conduct simulated action test, and press it for a long time to enter setup mode; press this button to reset under fault conditions.

5.6 Pluggable terminal blocks, facilitate user connection.

5.7 Integrated design, simple structure, two installation methods of guide rail installation and screw mounting.

5.8 Fault memory and its instruction. In case of motor failure, LED flashes alternately and displays the fault code and maximum phase current value.

6. Protective characteristics

6.1 Overload operating characteristics

Overload multiple / Overload curve / Action time (s)	1.05	1.2	1.5	2	5	6	7.2	Remark
Kr=1	No action	63	40	22	3.6	2.5	1.8	Conform to Level 5
Kr=2	No action	125	80	45	7.2	5	3.5	Conform to Level 10A
Kr=3	No action	250	160	90	14	10	6.9	Conform to Level 10
Kr=4	No action	500	320	180	29	20	14	Conform to Level 20
Kr=5	No action	750	480	270	43	30	21	Conform to Level 30

6.2 Open-phase protection action characteristic

When any one phase current of the three-phase current of the main circuit is 0, the protector acts for 3s, with a relative error of±20%.

6.3 Action characteristics of three-phase current unbalance protection

When three-phase current of the main circuit complies with the formula below, the protector acts for 3s, with a relative error of±20%.

$$\frac{\mathop{\mathrm{Max}}_{i=1}^{3} |I_i - I_{avg}|}{I_{avg}} \times 100\% > 30\%$$

Where:

I_i: Current effective value per phase

I_{avg}: Average value of three-phase current effective value

«Электро-Профи» - www.ep.ru

6.4 Tripping characteristic

Time - current characteristic curve

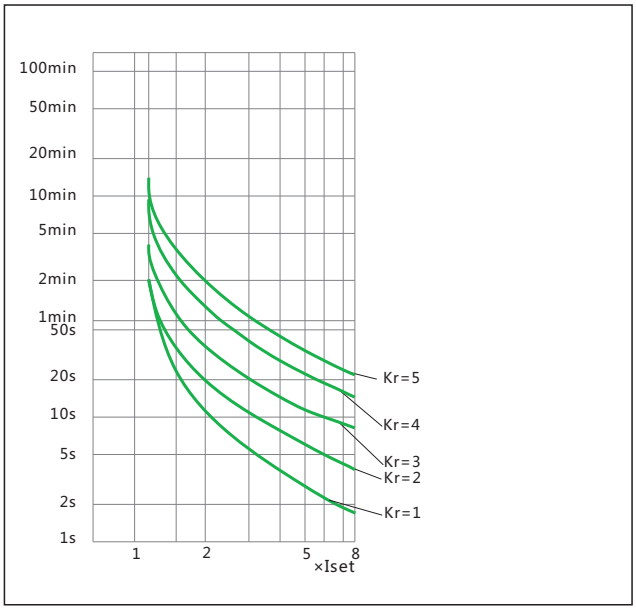

7. Wiring diagram

Control power supply voltage AC220V wiring diagram

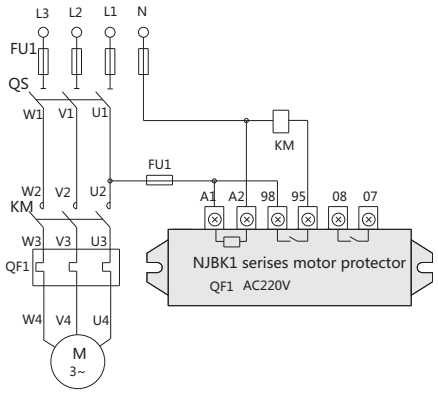

Control power supply voltage AC380V wiring diagram

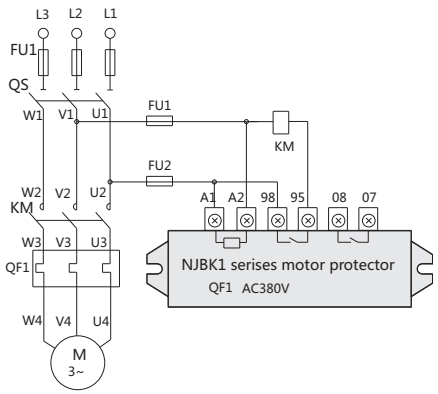

8. Overall and mounting dimensions (mm)



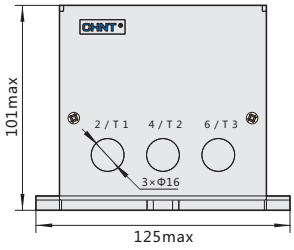

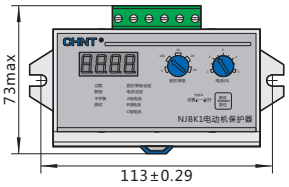



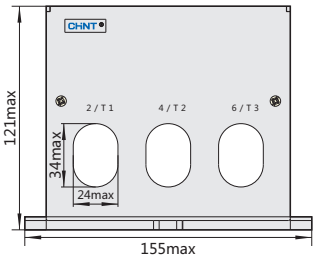

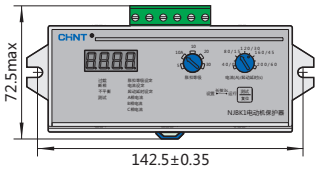

9. Ordering information

9.1 Name and type specification of protector
Select the control power supply voltage (AC220V, AC380V) according to the operating requirements Setting current range (1A~5A, 2A~10A, 6A~30A, 16A~80A,40A~200A,80A~400A).

9.2 Order quantity

«Электро-Профи» - www.ep.ru



NJBK2 Motor Protection Relay

1. General

NJBK2 series motor protection relay (hereinafter referred to protector as simply) is applicable for overload, locked-rotor, phase-failure, three phase current unbalance, earthing and PTC temperature protection of AC motor @ A.C.50Hz, less than 690V rated insulation voltage and 1A ~ 800A rated operating current for its continuous working or discontinuous working.
This product meets the requirements of IEC 60947- 4-1.

2. Type designation

N JBK 2 - □/□□

- Supply voltage
- Specification of rated current
- Rated current of the casing
- Design sequence No.
- Motor protection relay
- Company code

3. Operating conditions

3.1 Altitude ≤2000m.
3.2 Ambient air temperature -5℃ ~ +40℃, with daily average ≤+35℃.
3.3 Atmospheric condition: when the highest temperature is +40℃, relative humidity of air shall be no more than 50%, higher relative humidity shall be allowable at lower temperature.
The max monthly average relative humidity of the most humid month shall be not more than 90% and the lowest monthly average temperature of the same month should be no more than +25 ℃, condensed dew on surface of the product due to the change of the temperature should be taken into account.
3.4 Pollution Level: Level 3.
3.5 Installation Category: Ⅲ.
3.6 Inclination between installation plane and vertical plane shall ≤±5°.
3.7 At places without prominence rock, impact and vibration.
3.8 At places without explosive risk, without gases that may be corrosive to metal or gases that may cause damage to the insulation, and with little conducting dust
3.9 At places where rain & snow proof facilities are equipped with and not being full of steam.

4. Technical data

4.1 Main circuit: rated insulation voltage AC690V, rated frequency 50Hz.

Type	Rated current (A)	Setting current range (A)	Suitable motor power (kW)
NJBK2-200/10	10	2~10	1~5
NJBK2-200/50	50	10~50	5~25
NJBK2-200/200	200	40~200	20~100
NJBK2-400/400	400	160~400	80~200
NJBK2-800/800	800	320~800	160~400

4.2 Auxiliary circuit: rated insulation voltage AC380V, rated frequency 50Hz, Utility classes, rated operating voltage, rated operating current and conventional heating current.

Utility classes	AC-15	
Rated operating voltage (V)	240	380
Rated operating current (A)	1.5	0.95
Conventional heating current (A)	5	

5. Design features

5.1 Equipped with functions of overload, locked-rotor, phase-failure, three-phase unbalance, earthing and PTC temperature protection etc.
5.2 Six indicators indicate status of power supply, operation, phase-failure (three phase unbalance), overload, earthing and temperature, respectively. Equipped with function of fault memory.
5.3 Four kinds of trip class.
5.4 Digital dial-up settings with high precision.
5.5 Three kinds of reset modes: manual reset, remote manual reset and automatic reset.

G

CE

«Электро-Профи» - www.ep.ru

5.6 Installation mode: installation in parts and integral installation. Transformer Installation: bolts installation and Track installation. Relay Installation: Rapid Track installation through meter.

5.7 Equipped with function of six times of current to test [Test by 6 times of the current].

6. Protection characteristics

6.1 Operation characteristics under three-phase balanced-load status

S.N.	Times of setting current	Trip class	Operation time	Test condition	Ambient temperature℃
1	1.05	10A	<2h non-tripping	Start from cold status	
		10			
		20			
		30			
2	1.2	10A	<2h tripping	Start right after Item No.1	20±2
		10			
		20			
		30			
3	1.5	10A	<2min	Start right after Item No.1	
		10	<4min		
		20	<8min		
		30	<12min		
4	7.2	10A	2s<tp≤10s	Start from cold status	
		10	4s<tp≤10s		
		20	6s<tp≤20s		
		30	9s<tp≤30s		

6.2 Operation characteristic under phase-failure status

S.N.	Times of setting current		Operation time	Test condition	Ambient temperature℃
	Any two phases	The third phase			
1	1.0	0.9	<2h non-tripping	Start from cold status	20±2
2	0.3~1.0	<Imax×40%	≤5s		
3	0.3~1.0	0	≤5s		

6.3 Tripping feature

NJBK2 current-time characteristic curve

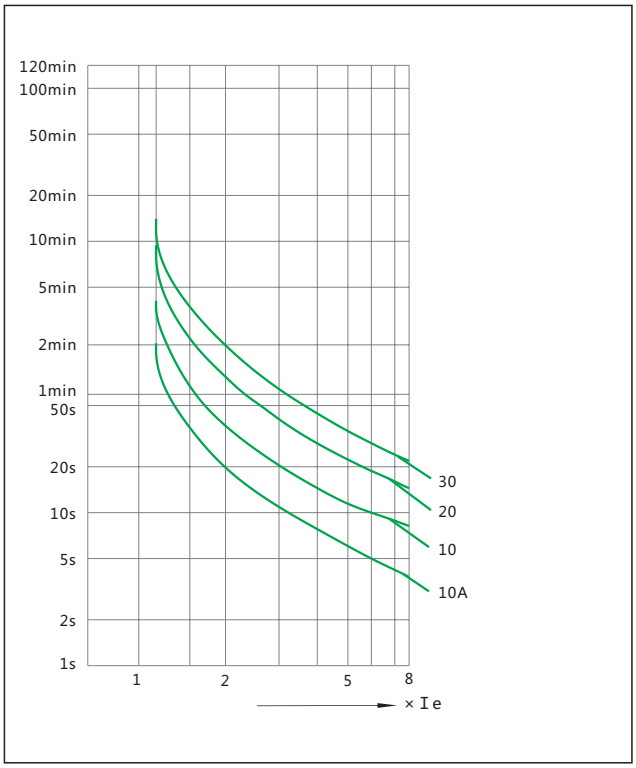

6.4 Performance feature of earthing protection

Serial number	Zero sequence current (A)	Operation time (s)
1	0.5	≤1
2	1	≤1

6.5 Protection feature of pre-buried PTC thermistor in motor: PTC thermistor protection is carried out by detecting resistance value of thermistor output from PTC detector pre-buried in stator winding or bearing of motor and taking it as protection condition to judge whether motor is overheating, when PTC reaching reacting resistance value, reacting delay<1s.

PTC protection

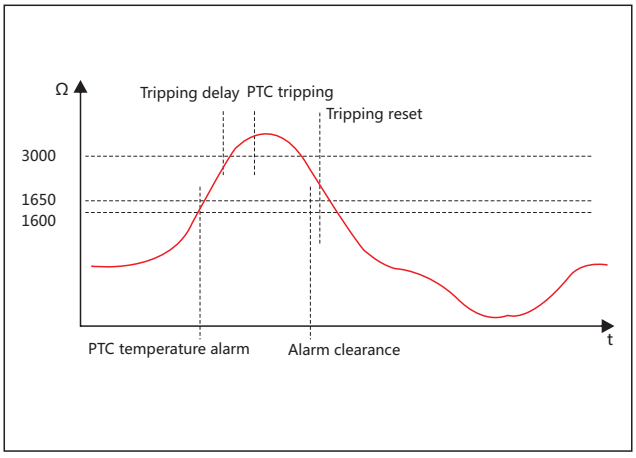

«Электро-Профи» - www.ep.ru

6.6 Reset feature:Manual reset, automatic reset and remote manual reset are available for option Resetting time varies according to different trip class, among the range of 4min to 12min.

7. Wiring diagram

7.1 Wiring diagram for control power supply @ AC220V voltage

Wiring diagram for control power supply @ AC220V voltage

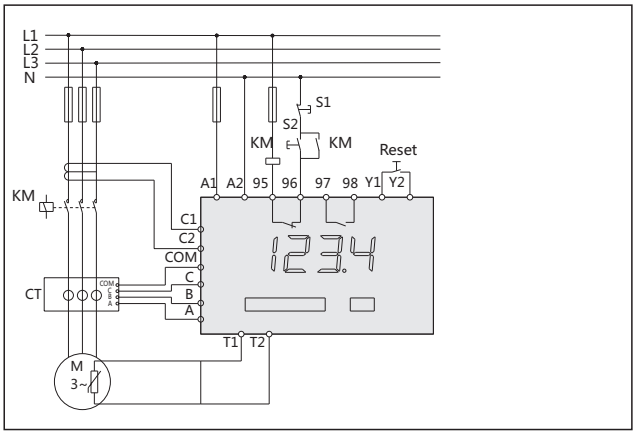

7.2 Wiring diagram for control power supply @ AC380V voltage

Wiring diagram for control power supply @ AC380V voltage

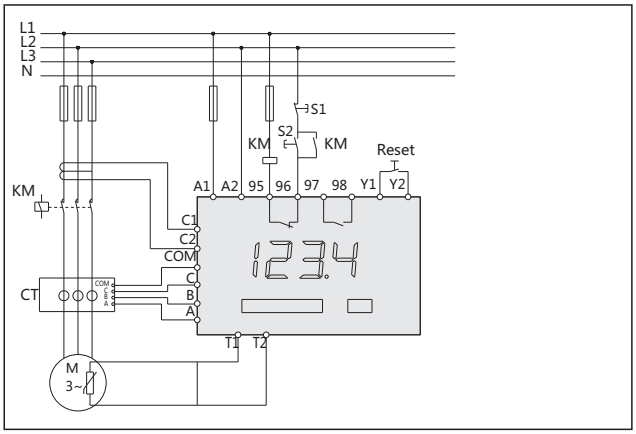

8. Accessory instruction

S.N.	Designation	Quantity	Remarks
1	NJBK2-200 conductive bar	3	It is suggested to be used when main circuit current is within the range of 80A-200A.
2	NJBK2 wire holder	2	Instrument installation
3	NJBK2 clamp	1	Instrument installation

9. Overall and mounting dimensions (mm)

9.1 Overall and Amounting dimensions of NJBK2-200 transformer

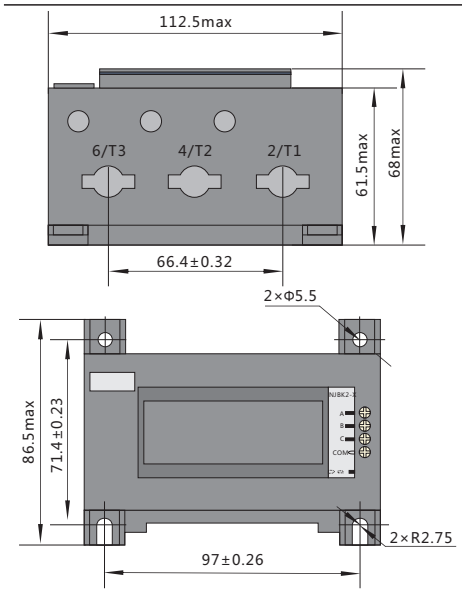

Top view

9.2 Overall and mounting dimensions of NJBK2-200 macropore transformer

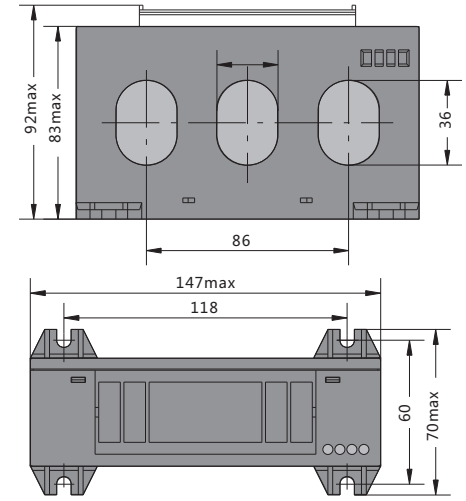

G

«Электро-Профи» - www.ep.ru

9.3 Overall and Amounting dimensions of NJBK2-400 transformer

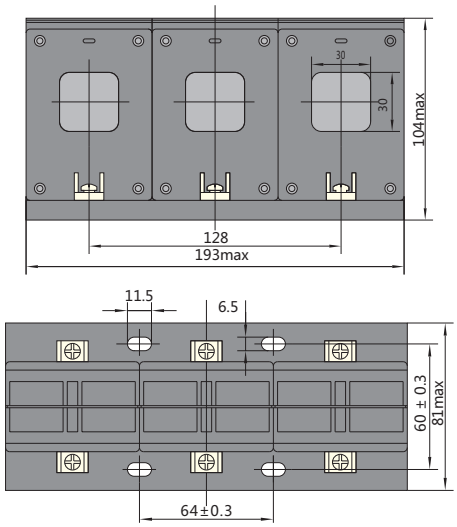

Top view

9.4 Overall and mounting dimensions of NJBK2-800 transformer

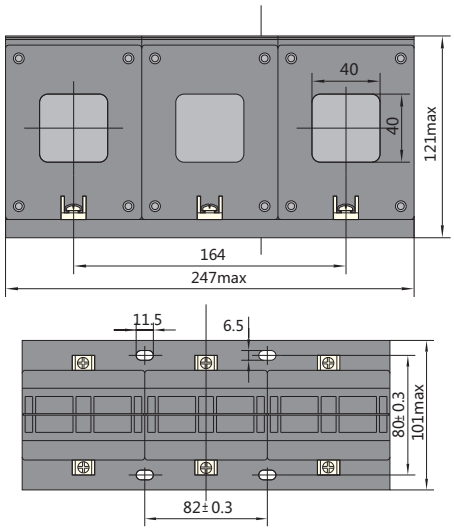

Top view

9.5 Overall and mounting dimensions of module sample

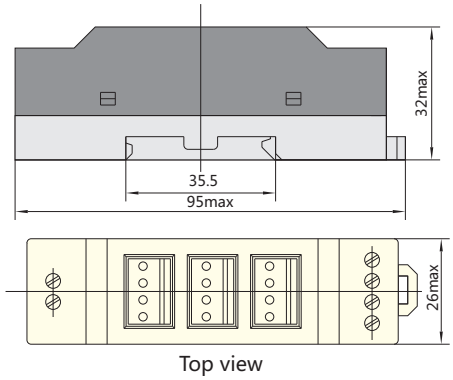

Top view

9.6 Overall and mounting dimensions of relay of protector

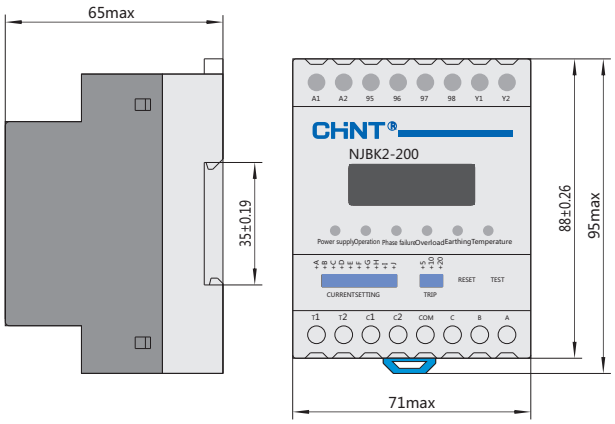

9.7 Overall and mounting dimensions of relay of protector

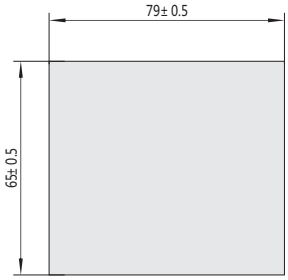

10. Ordering information

10.1 Designation and specification of protector, select control current and voltage (AC220V, AC380V), setting current range (2A~10A, 10A~50A, 40A~200A, 160A~400A, 320A~800A), accessories (NJBK2-200 conductive bar, NJBK2 wire holder, NJBK2 clamp) according to operating requirements.

10.2 Order Quantity.

«Электро-Профи» - www.ep.ru



NJBK5 Motor Controller

1. General

NJBK5 series motor controller (hereinafter referred to as controller) is mainly used in circuits with a frequency of AC 50Hz (or 60Hz), a rated operational voltage of up to 380V and a rated control power of up to 11kW (current up to 22A) to control the direct start and stop of water pumps or motors, provide motors with overload and phase failure protection, and realize automatic liquid level control for civil water towers and reservoirs.
This product is not applicable to the liquid level control of low-conductivity liquids, such as oil, purified water, inflammable and explosive chemical liquids and high-density sewage.
Standards: IEC 60947-4-1.

2. Type designation

N JBK 5 - □ □ / □ □

- Company code
- Motor controller
- Design sequence No.
- 10: frame size code
- Function code
  Blank: with liquid level relay
  D: without liquid level relay
- Rated control supply voltage
- Rated operational current

3. Operating conditions

3.1 Altitude: the altitude of the mounting location should not exceed 2000m;

3.2 Ambient temperature: -5℃~+40℃, and the average temperature in 24h should not exceed +35℃;

3.3 Atmospheric conditions: The relative air humidity at the mounting location should not exceed 50% at the maximum temperature of +40℃. The relative humidity may be higher at lower temperatures. Special measures should be taken if condensation occurs on the product occasionally due to temperature variation;

3.4 Pollution degree: 3;

3.5 Mounting category: Ⅲ;

3.6 In places where there is no significant vibration or impact;

3.7 In non-explosive media that do not contain a sufficient amount of gas or dust to cause metal corrosion or insulation failure;

3.8 In places where rain and snow protection is provided;

3.9 The inclination from the vertical plane should not exceed 5°.

CE

«Электро-Профи» - www.ep.ru

4 Technical data

4.1 Main data and technical characteristics

Type	Conventional heating current (A)	Max. rated power (kW) AC-3 380V	Max. rated power (kW) AC-3 220V	Model of matching AC contactor	Model of matching motor protector	Setting current range (A)	Number of turns of protector (turn)
NJBK5-10 0.72A~2.4A	2.4	1.1	0.55	NXC-06/CJX2-1210	JD-8/0.5A~5A	0.72~2.4	5
NJBK5-10D 0.72A~2.4A							
NJBK5-10 3.5A~11A	12	5.5	3	NXC-12/CJX2-1210	JD-8/2A~20A	3.5~11	1
NJBK5-10D 3.5A~11A							
NJBK5-10 10A~16A	16	7.5	4	NXC-16/CJX2-1810	JD-8/2A~20A	10~16	1
NJBK5-10D 10A~16A							
NJBK5-10 20A~25A	25	11	5.5	NXC-25/CJX2-2510	JD-8/20A~80A	20~25	1
NJBK5-10D 20A~25A							

4.2 Rated control supply voltage Us: AC220V, AC380V.

4.3 Degree of protection of enclosure: IP55.

4.4 Protection characteristics of the controller

4.4.1 Phase failure protection characteristics of the controller: In case of failure of any phase of the three-phase main circuit passing through the center hole of the motor comprehensive protector in the controller, the motor comprehensive protector operates for a period of ≤5s.

4.4.2 Overload protection characteristics of the controller under balanced three-phase load.

No.	Setting current multiple	Operation time			Starting conditions
1	1.05	No operation within 2h			Cold state start
2	1.2	Operation within 2h			Start after No.1
3	1.5	Tripping class	30	≤12min	Start after applying a 1.0 times setting current for 2h
4	7.2	Tripping class	30	9s<Tp≤30s	Cold state start

4.5 Down-lead distance of liquid level control electrode: 200m max.

4.6 Mounting type: installation type.

5. Features

The controller consists of a NXC or CJX2 series AC contactor, a JD-8 series motor comprehensive protector and an NJB1-YW1 liquid level relay in a protective enclosure and is divided into two types, with liquid level relay and without liquid level relay. Products with liquid level relay are used to control the start and stop and automatic pumping and drainage of water pumps and provide overload and phase failure protection. Products without liquid level relay are used to control the start and stop of motors and provide overload and phase failure protection.

Setting of the motor comprehensive protector in the controller is required before it is connected and put into use.

6. Wiring diagram

a. Connection diagram of NJBK5-10 in case both the control circuit voltage and the main circuit voltage are AC380V

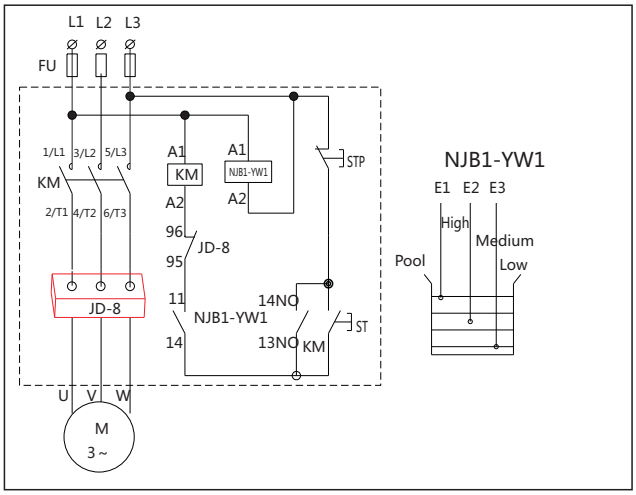

b. Connection diagram of NJBK5-10 in case the main circuit voltage is AC380V and the control circuit voltage is AC220V

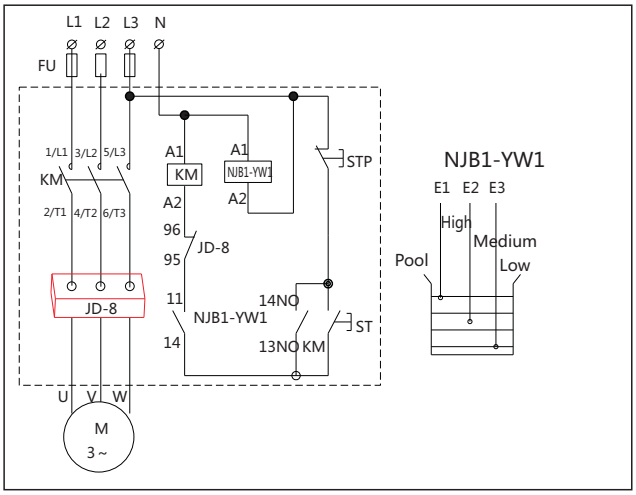

«Электро-Профи» - www.ep.ru

a.Connection diagram of NJBK5-10D in case both the control circuit voltage and the main circuit voltage are AC380V

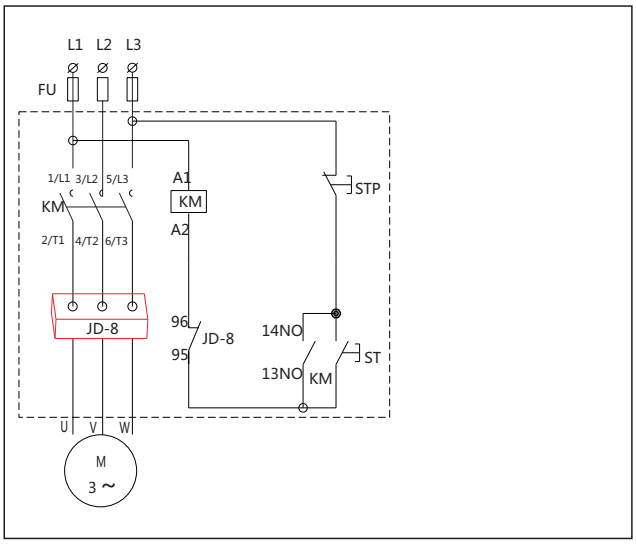

b.Connection diagram of NJBK5-10D in case the main circuit voltage is AC380V and the control circuit voltage is AC220V

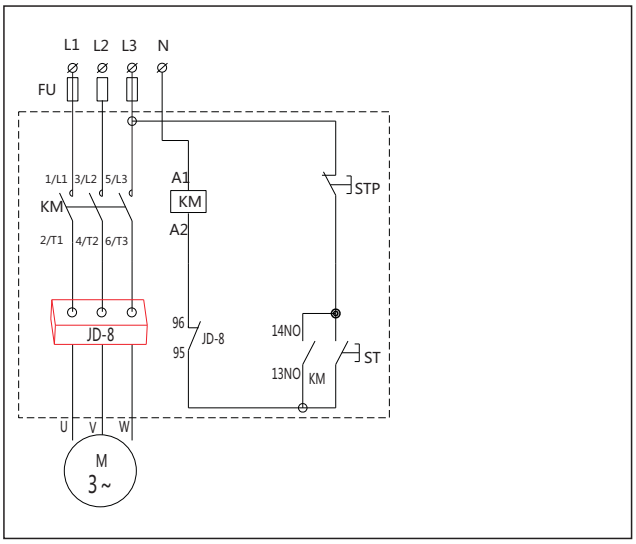

7. Overall and mounting dimensions (mm)

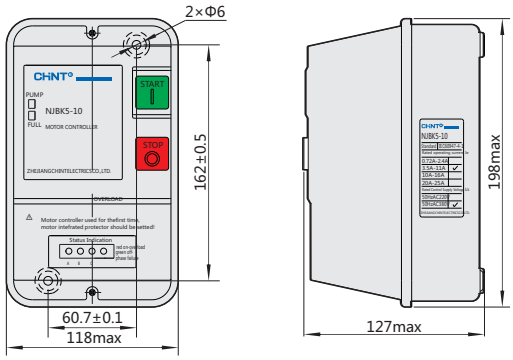

G



NJBK5-5 Motor Controller

1. General

NJBK5-5 motor controller (hereinafter referred to as controller) is mainly used in circuits with a frequency of AC 50Hz/60Hz, a rated operational voltage of up to 220V and a rated control power of up to 2.2kW (current up to 20A) to control the direct start and stop of single-phase water pumps, provide overload and underload protection (pump runaway protection), and realize automatic liquid level control for civil water towers and reservoirs.
This product is not applicable to the liquid level control of oil, purified water, inflammable and explosive chemical liquids, corrosive liquids and high-density sewage.
Standards: IEC 60947-4-1.

2. Type designation

N JBK 5 - □ / □ □

- Rated control supply voltage
- Rated operational current
- 5: frame size code
- Design sequence No.
- Motor controller
- Company code

3. Operating conditions

3.1 Altitude: the altitude of the mounting location should not exceed 2000m;

3.2 Ambient tempeature: -5℃~+40℃, and the average temperature in 24h should not exceed +35℃;

3.3 Atmospheric conditions: The relative air humidity at the mounting location should not exceed 50% at the maximum temperature of +40℃. The relative humidity may be higher at lower temperatures. Special measures should be taken if condensation occurs on the product occasionally due to temperature variation。

3.4 Pollution degree: 3;

3.5 Mounting category: Ⅱ;

3.6 In places where there is no significant vibration or impact;

3.7 In non-explosive media that do not contain a sufficient amount of gas or dust to cause metal corrosion or insulation failure;

3.8 In places where rain and snow protection is provided;

3.9 The inclination from the vertical plane should not exceed 5°.

CE

«Электро-Профи» - www.ep.ru

4. Technical data

4.1 Main data and technical characteristics

Model	Type	Conventional heating current (A)	Setting current range (A)	Rate power		Rated operational voltage (V)	Utilization category
				kW	HP		
NJBK5-5	2A~10A	20	2~10	0.25~1.1	1/3~1.5	AC220	AC-1
	4A~20A		4~20	0.55~2.2	3/4~3		

4.2 Rated control supply voltage Us: AC220V.

4.3 Rated control supply voltage fluctuation range: (85%~110%)Us.

4.4 Degree of protection of enclosure: IP20.

4.5 Operating characteristics

4.5.1 When overload protection is active, the red "Fault" indicator of the controller lights up permanently, and overload protection operates according to tripping class 10, see Table 2.

Table 2 Operating characteristics of overload protection

No.	Setting current multiple	Operation time	Starting conditions
1	1.05	No operation within 2h	Cold state start
2	1.2	Operation within 2h	Start after No.1
3	1.5	≤4min	Start after applying a 1.0 times setting current for 2h
4	7.2	4s<Tp≤10s	Cold state start

4.5.2 Operating characteristics of underload protection (pump runaway protection): When the actual operational current of the pump motor is less than 20%~100% of the rated current of the motor, the red "Fault" indicator of the controller flashes and, after a delay of 60s±10s, the controller stops operation.

4.5.3 Protection return characteristics: After the operation of the overload or underload protection (pump runaway protection) of the controller, the controller restarts automatically after a delay of 30min±3min.

4.5.4 Reset characteristics: power-off reset, the reset time ≤ 1min.

4.6 Down-lead distance of liquid level control electrode: 500m max.

4.7 Requirements for the liquid under control: general domestic water or high-conductivity sewage.

4.8 Mounting type: installation type.

5. Structure and principle

The controller consists of four parts, enclosure, base, sealing ring and main control panel. The enclosure has a "Force Start" button, which is used to start the pump motor forcibly to fill the pool when the highest water level has not been reached and becomes invalid when the highest water level has been reached. It also has a "Power" switch, which is used to switch on or off the power supply of the controller (position "I" is on, and position "0" is off).

There are three liquid level detection electrode wires in the controller, E1, E2 and E3, which should be connected and installed in high, medium and low positions in the pool under control by the user. When the water level in the pool is lower than position E3, the controller starts the pump motor to pump water and the yellow "Water Level" indicator on the controller panel flashes, until the water level in the pool reaches position E1. At this time, the yellow "Water Level" indicator on the controller panel lights up permanently and the pump stops pumping.

«Электро-Профи» - www.ep.ru

6. Installation and commissioning

6.1 Before installation, read the operating instructions carefully. Then, connect the wires in accordance with the connection diagram. During connection, the live wire and neutral wire of the controller power supply should be distinguished from each other, the three liquid level detection electrodes in the controller, E1, E2 and E3, should be installed in high, medium and low positions in the pool under control by the user, the terminals should be highly conductive.

6.2 Before the controller is put into use, overload setting must be carried out. Otherwise, overload protection will be inactive. Overload setting is accomplished by simply setting the current value on the overload dial of the controller to the rated current of the motor. The underload setting value can generally be 50% of the rated current. The user may also carry out underload setting after detecting the no-load current of the motor and calculating the percentage to the rated current.

6.3 After checking the connection and carrying out overload and underload setting, press the power switch on the controller panel to switch on the power supply and carry out relevant overload and underload tests. The controller may be used only if it operates normally. If a fault occurs, check the connection or the overload and underload setting.

7. Wiring diagram

Figure 1 Connection diagram

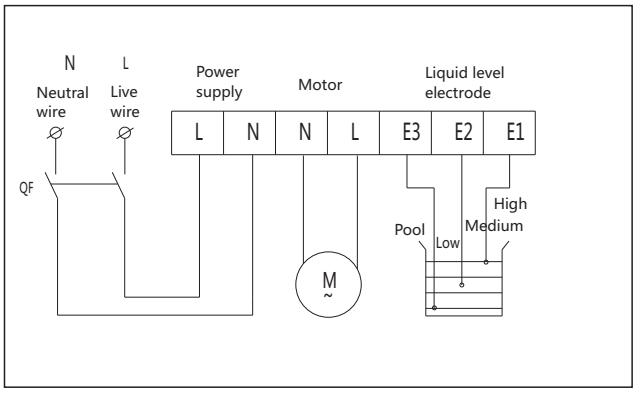

Figure 2 Schematic diagram of setting knob

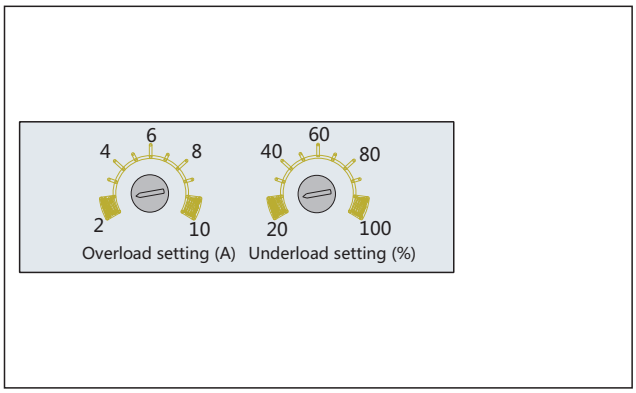

8. Overall and mounting dimentions (mm)

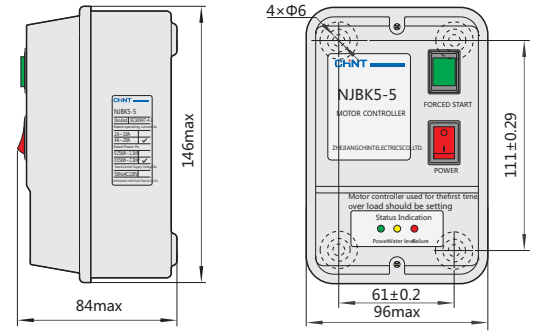



JD-5A Integrated Motor Protector

1. General

JD-5A Integrated Motor Protector (hereinafter referred to as protector) is applicable for overload, phase-failure and three-phase current unbalance protection of AC motor @ A.C.50Hz, less than AC690V rated insulation voltage and 1A~400A rated operating
current for its continuous working or discontinuous working. Protector and AC contactor are generally used cooperatively.
This product meets the requirements of IEC 60947-4-1.

2. Type designation

JD - 5 □ / □□

- Supply voltage
- Code of setting current
- Derived code
- Design consequence number
- Integrated motor protector

3. Operating conditions

3.1 Altitude ≤2000m.

3.2 Ambient temperature Range:-5℃~ +40℃, with daily average≤+35℃.

3.3 Atmospheric condition: when the highest temperature is +40℃, relative humidity of air shall be no more than 50%, higher relative humidity shall be allowable at lower temperature, for instance air humidity may reach 90% at +20℃. As for dews, which contigently appear due to change of temperature, special steps should be taken

3.4 Pollution Level: Level 3.

3.5 Inclination between installation plane and vertical plane shall≤±5°.

3.6 At places without explosive risk, without gases that may be corrosive to metal or gases that may cause damage to the insulation, and with little conducting dust.

3.7 At places where rain & snow proof facilities are equipped with and not being full of steam.

3.8 At places without prominence rock, impact and vibration.

3.9 Installation Category: Ⅲ.

CE

«Электро-Профи» - www.ep.ru

4. Technical data

Table 1

Type	Setting current range (A)	Voltage of control power supply (Supply Voltage) (V)	Suitable motor power (kW)
JD-5A/80	1~5	220V, 380V	0.5~2.5
JD-5A/80	5~20	220V, 380V	2.5~10
JD-5A/80	20~80	220V, 380V	10~40
JD-5A/400	80~200	220V, 380V	40~100
JD-5A/400	160~400	220V, 380V	80~200

Control circuit: rated insulation voltage AC380V, rated frequency 50Hz, contact parameters refer to Table 2.

Table 2

Use type	AC-15	
Rated operating voltage (V)	240	380
Rated operating current (A)	1.5	0.95
Conventional thermal current (A)	5	

5. Design features

5.1 Three-phase electronic type, trip class is level 10A, 10, 20 and 30.

5.2 Equipped with function of phase-failure, overload and three-phase unbalance protection.

5.3 Digital dial-up setting with high precision

5.4 Digital current display.

5.5 Three indicators indicate normal, overload and phase-failure (three-phase current unbalance) status respectively.

5.6 Main circuit adopts feed-through wiring.

5.7 Installation mode: bolts.

6. Protection features

6.1 Operation characteristics under phases balanced-load status (see Table 3)

6.2 Operation characteristic under phase-failure status

Operation characteristic under phase-failure status should meet the requirement: operation time of protector ≤5s

$$\frac{\overset{3}{\underset{i=1}{\text{Max}}}\left|I_i - I_{avg}\right|}{I_{avg}} \times 100\% > 40\%$$

Where:

I_i---The r.m.s value of each phase

I_{avg}---The average current of thee-hase current

6.3 Tripping feature

Figure 1

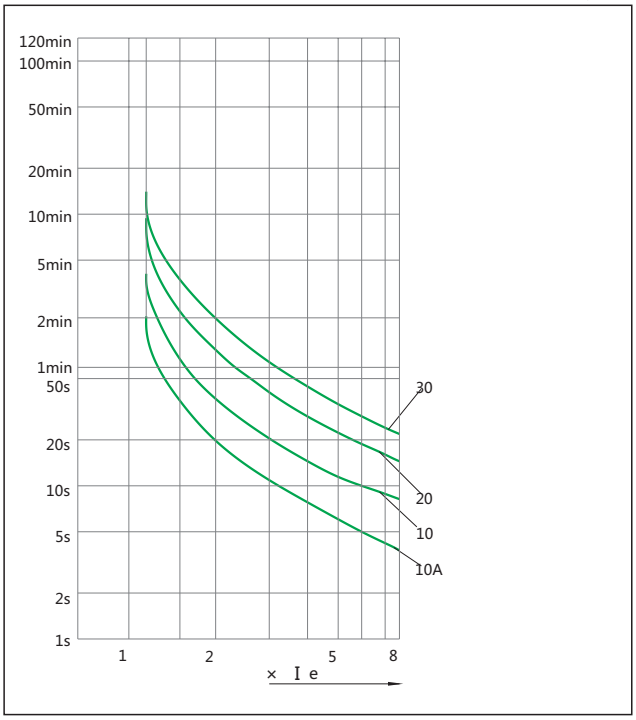

S.N.	I/In	Trip class	Operation time	Test condition	Ambient temperature
1	1.05	10A	<2h non-tripping	start from cold status	20±2
		10			
		20			
		30			
2	1.2	10A	<2h tripping	Right after item No.1	
		10			
		20			
		30			
3	1.5	10A	<2min	Start after putting one time of setting current through main circuit for 2h	
		10	<4min		
		20	<8min		
		30	<12min		
4	7.2	10A	2s<Tp≤10s	start from cold status	
		10	4s<Tp≤10s		
		20	6s<Tp≤20s		
		30	9s<Tp≤30s		

6.4 Reset mode: De-energizing reset.

«Электро-Профи» - www.ep.ru

7. Wiring diagram

7.1 See Figure 2 for wiring diagram of control power supply @ AC220V voltage.

Figure 2

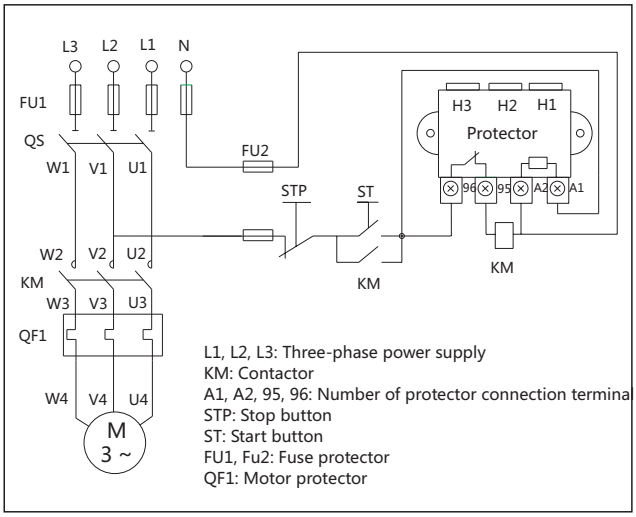

7.2 See Figure 3 for wiring diagram of control power supply @ AC380V voltage.

Figure 3

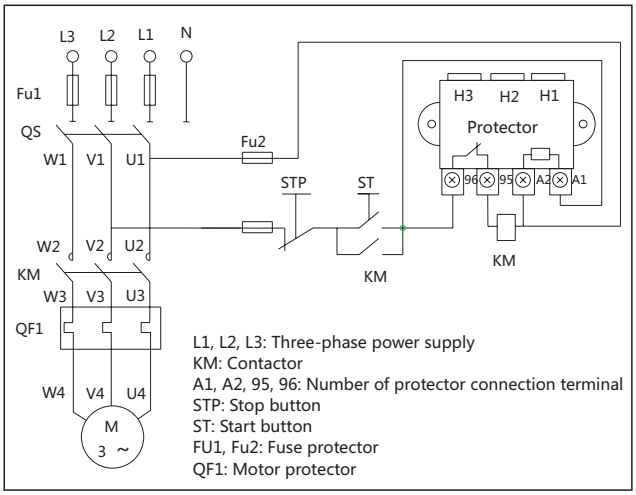

8. Overall and mounting dimensions (mm)

JD-5A/80

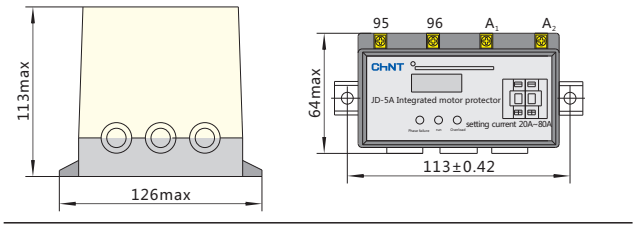

JD-5A/400

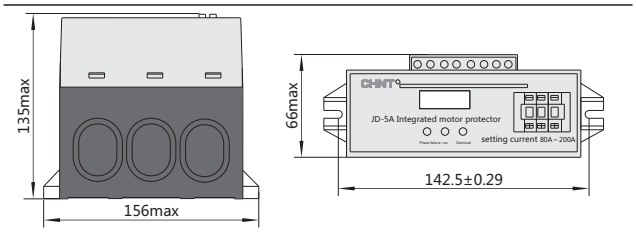

9. Ordering information

9.1 Designation and type-specification of protector, select controlling current and voltage (AC220V, AC380V, setting current range (1A~5A, 5A~20A, 20A~80A, 80A~200A, 160A~400A), Trip class (10A, 10, 20, 30) according to operating requirements. Trip class in routine order is level 10.

9.2 Order Quantity.

G

«Электро-Профи» - www.ep.ru



JD-5E Integrated Motor Protector

1. General

JD-5E Integrated Motor Protector is applicable to overload and phase failure protection of AC motor working for a long time or discontinuously with AC 50Hz, rated insulation voltage AC690V and rated working current 1A-400A. The protector is usually matched with the AC contactor for use. It conforms to IEC 60947-4-1 standards.

CE

2. Type designation

JD- 5 E / □ □

- Rated control supply voltage
- Code of setting current
- Derived code
- Design serial number
- Integrated inotor protector

3. Operating conditions

3.1 Altitude ≤2000m.

3.2 The ambient air temperature is -5℃~+40℃ and the average temperature within 24h shall not exceed +35℃.

3.3 Atmospheric condition: Relative humidity of atmosphere shall not exceed 50% at the temperature of +40℃,and higher relative humidity is allowed at lower temperature. For example, the air humidity can reach 90% at the temperature of +20℃. Regarding the condensation casually caused by humidity change, special measures shall be taken.

3.4 Class of pollution: Class Ⅲ.

3.5 Installation category: category Ⅲ.

3.6 The angle between the installation surface and the vertical surface shall not exceed ±5 degrees.

3.7 The place without obvious shake, impact and vibration shall be selected as the installation site.

3.8 The installation site shall conform to the following standards: explosive and dangerous medium, no gas capable of corroding and damaging insulation in the medium and less conductive dust in the medium.

3.9 The place with rain-proof and snow-proof equipment and a little water vapor shall be used as the installation site.

4. Technical data

4.1 Main circuit: rated insulation voltage AC690V, rated frequency 50Hz (shown in Table 1)

Table 1

Model	Range of setting current (A)	Controlled supply voltage (V)	Power suitable for motor (kW)
JD-5E	1~5	220V OR 380V	0.5~2.5
JD-5E	5~25	220V OR 380V	2.5~12.5
JD-5E	20~80	220V OR 380V	10~40
JD-5E	80~200	220V OR 380V	40~100
JD-5E	160~400	220V OR 380V	80~200

4.2 Auxiliary circuit: rated insulation voltage AC380V, rated frequency 50Hz (shown in Table 2)

Table 2

Utility Category	AC-15	
Rated operating voltage (V)	240	380
Rated operating current (A)	1.5	0.95
Conventional thermal current (A)	5	

«Электро-Профи» - www.ep.ru

5. Others

5.1 Structure characteristics
5.1.1 Three-phase electronic type
5.1.2 Function of phase failure and overload protection
5.1.3 Device capable of continuously adjusting setting current
5.1.4 Three indicating lights respectively indicate the working states of phase failure, operation and overload.
5.1.5 The main circuit adopts pass-through-core type wiring method.
5.1.6 Installation method: installation via screws

5.2 Protective characteristics
5.2.1 The operating characteristics of the protector during load unbalance of each phase are shown in Table 3.

Serial number	Multiple of setting current	Tripping level	Actuation time	Starting condition	Ambient air temperature (℃)
1	1.05	10A	No actuation within 2h	Start from cold state	20±2
		10			
		20			
		30			
2	1.2	10A	Actuation within 2h	Operation following sequence 1	
		10			
		20			
		30			
3	1.5	10A	< 2min	Operation following sequence 1	
		10	< 4min		
		20	< 8min		
		30	< 12min		
4	7.2	10A	2s < tp≤10s	Start from cold state	
		10	4s < tp≤10s		
		20	6s < tp≤20s		
		30	9s < tp≤30s		

5.2.2 Tripping characteristics

The tripping level of the protector with rated working current from 1A to 80A is level 10A.

The tripping level of the protector with rated working current from 80A to 400A can be set as 10A, 10, 20 or 30.

Figure 1

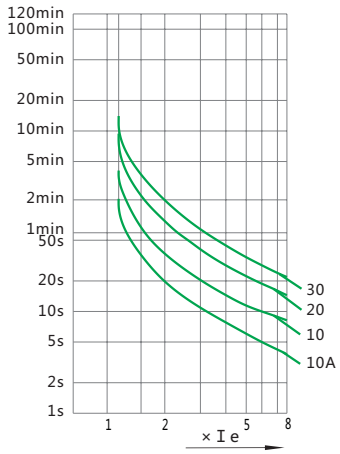

G

«Электро-Профи» - www.ep.ru

5.3 Wiring diagram

5.3.1 Wiring diagram for control power supply @ AC220V voltage

Figure 2

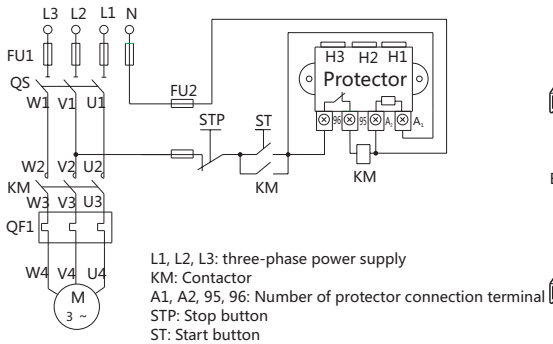

L1, L2, L3: three-phase power supply
KM: Contactor
A1, A2, 95, 96: Number of protector connection terminal
STP: Stop button
ST: Start button
FU1, FU2: Fuse protector
QF1: Motor protector

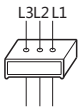

Each phase more than 1A feedthrough by three times

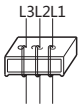

Each phase below 1A feedthrough by three times

5.3.2 Wiring diagram for control power supply @ AC380V voltage

Figure 3

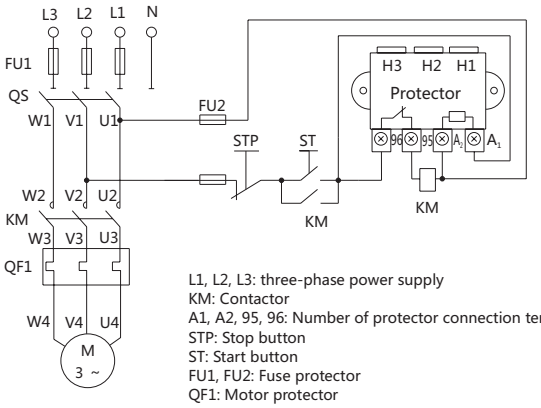

L1, L2, L3: three-phase power supply
KM: Contactor
A1, A2, 95, 96: Number of protector connection terminal
STP: Stop button
ST: Start button
FU1, FU2: Fuse protector
QF1: Motor protector

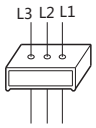

Each phase more than 1A feedthrough by three times

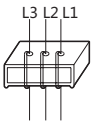

Each phase below 1A feedthrough by three times

6. Overall and mounting dimensions (mm)

JD-5E/80

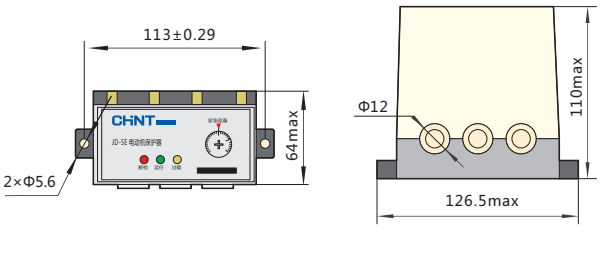

JD-5E/400

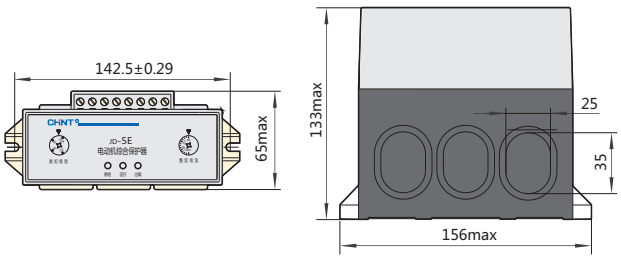

7. Ordering information

7.1 Designation and type-specification of protector, select controlling current and voltage (AC220V, AC380V), setting current range (1A~5A, 5A~25A, 20A~80A, 80A~200A, 160A~400A), according to operating requirements.

7.2 Order Quantity.

«Электро-Профи» - www.ep.ru



JD-5 Motor Integrated Protector

1. General

JD-5 Motor Integrated Protector (hereinafter referred to as protector) is applicable for overload and phase-failure protection of AC motor @ A.C.50Hz, less than AC690V rated insulation voltage and 0.5A~400A rated operating current for its continuous working or discontinuous working. Protector and AC contactor are generally used cooperatively.
This product meets the requirements of IEC 60947- 4-1.

2. Type designation

JD - □ /□□

- Rated control power voltage
- Rated current code
- Design sequence No.
- Motor Integrated Protector

3. Operating conditions

3.1 Altitude ≤2000m.

3.2 Ambient temperature Range: -5℃ ~ +40℃, with daily average ≤ +35℃.

3.3 Atmospheric condition: when the highest temperature is +40℃, the relative humidity of air shall be no more than 50%, higher relative humidity shall be allowable at lower temperature, for instance air humidity may reach 90% at +20 ℃. As for dews, which contigently appear due to change of temperature, special steps should be taken.

3.4 Pollution Level: Level 3.

3.5 Inclination between installation plane and vertical plane shall ≤±5°.

3.6 In the media without explosive risk, and no gases that may be corrosive to metal and damage insulation in the media together with at places where much conducting dust being in existence.

3.7 At places where rain & snow proof facilities are equipped with and not being full of steam.

3.8 At places without prominence rock, impact and vibration.

3.9 Installation Category: Ⅲ.

4. Technical data

4.1 Rated insulation voltage AC690V, rated frequency 50Hz,rated operating current 0.5A ~ 400A.

Table 1

Type	Setting current range (A)	Voltage of control power supply (Supply Voltage) (V)	Suitable motor power (kW)
JD-5/80	0.5~5	220V, 380V,	0.25~2.5
JD-5/80	2~20	220V, 380V,	1~10
JD-5/80	20~80	220V, 380V,	10~40
JD-5/400	80~200	220V, 380V,	40~100
JD-5/400	160~400	220V, 380V,	80~200
JD-5(with buzzer)	1~80	220V, 380V,	0.5~40

4.2 Control circuit: rated insulation voltage AC380V, rated frequency 50Hz, contact parameters refer to Table 2.

Table 2

Use type	AC-15	
Rated operating voltage (V)	220	380
Rated operating current (A)	1.5	0.95
Conventional thermal current (A)	5	

5. Design features

5.1 Three-phase electronic type, tripping grade (trip class): 10A.

5.2 Equipped with function of phase-failure and overload protection.

5.3 Equipped with continuously adjustable device for setting current.

5.4 Three indicators indicate normal, overload and phase-failure status respectively.

5.5 Main circuit adopts feed through wiring.

5.6 Installation mode: use bolts for installation.

«Электро-Профи» - www.ep.ru

6. Protection features

6.1 Operation characteristics under three-phase balanced-load status (see Table 3)

Table 3

S.N.	I/In	operating time	Test Condition	Ambient temperature
1	1.05	<2h non-tripping	Cold Status	+20℃
2	1.20	<2h tripping	Hot Status	
3	1.50	<2 min tripping		
4	7.20	2s<Tp≤10s	Cold Status	

6.2 Operation characteristic under phase-failure status (see Table 4)

Table 4

S.N.	Multiple of setting current		operating time	Test Condition	Ambient temperature
	Any two phases	The Third phases			
1	1.0	0.9	<2h non-tripping	Cold Status	+20℃
2	1.15	0	≤5s	Hot Status	

6.3 Tripping feature

Figure 1

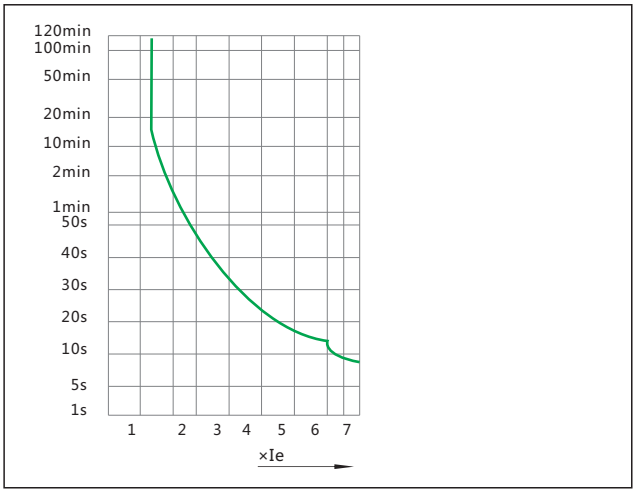

6.4 Reset mode: de-energizing reset

7. Wiring diagram

7.1 Wiring diagram for control power supply @ AC220V voltage

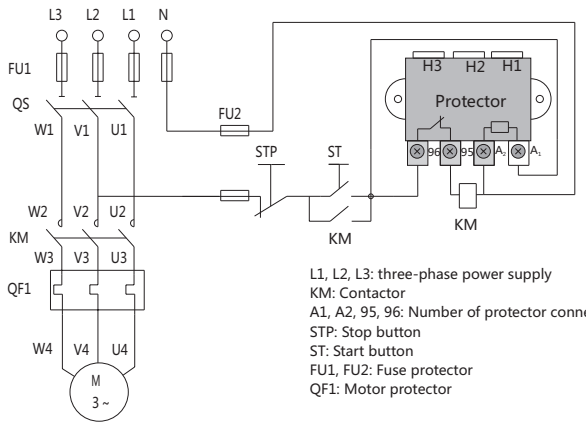

L1, L2, L3: three-phase power supply
KM: Contactor
A1, A2, 95, 96: Number of protector connection terminal
STP: Stop button
ST: Start button
FU1, FU2: Fuse protector
QF1: Motor protector

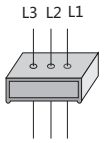

Circles of the cable: once (more than 3A)

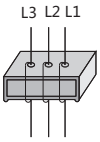

Circles of the cable: twice every phase (less than 3A)

7.2 Wiring diagram for control power supply @ AC380V voltage

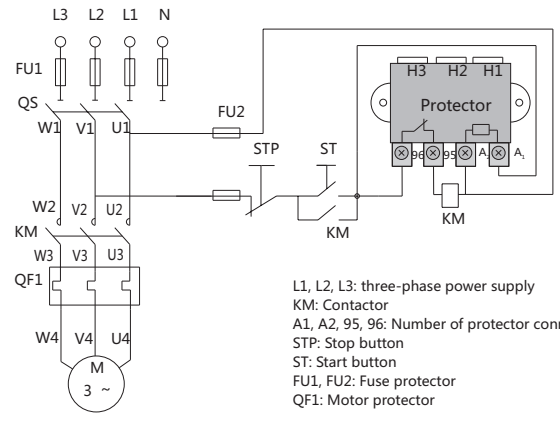

L1, L2, L3: three-phase power supply
KM: Contactor
A1, A2, 95, 96: Number of protector connection terminal
STP: Stop button
ST: Start button
FU1, FU2: Fuse protector
QF1: Motor protector

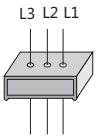

Circles of the cable: once (more than 3A)

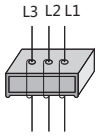

Circles of the cable: twice every phase (less than 3A)

«Электро-Профи» - www.ep.ru

8. Overall and mounting dimensions (mm)

JD-5/80

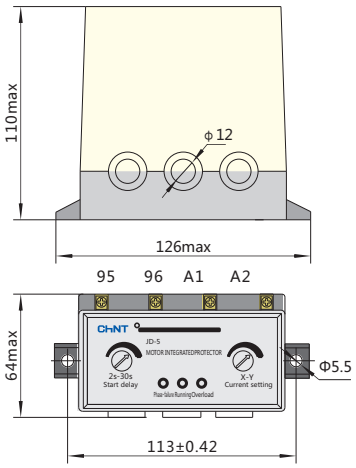

JD-5/400

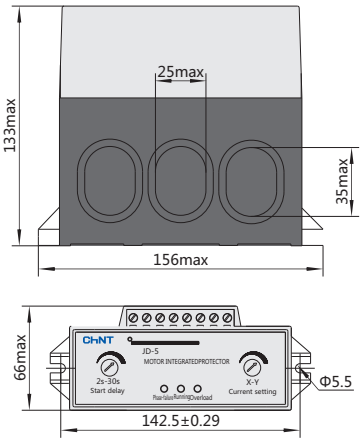

G

9. Ordering information

9.1 Designation, type and specification of protector, select controlling current and voltage (AC220V, AC380V,), setting current range (0.5A~5A, 2A~20A, 20A~80A, 80A~200A 160A~400A, etc) according to operating requirements.

9.2 Order Quantity.

«Электро-Профи» - www.ep.ru



JD-8 Integrated Motor Protector

1. General

JD-8 Integrated Motor Protector is mainly applicable to fault protection of overload and phase failure of low-voltage three-phase AC asynchronous motor in electric power system with AC frequency 50Hz and rated insulation voltage less than 690V. The protector is usually matched with the contactor in AC motor loop circuit for use. It conforms to IEC 60947-4-1 standards.

2. Type designation

JD - □

Design serial number

Integrated Motor Protector

3. Operating conditions

3.1 The altitude shall not exceed 2000m.

3.2 The ambient air temperature is -5℃~+40℃ and the average temperature within 24h shall not exceed +35℃. 3.3 Atmospheric condition: Relative humidity of atmosphere shall not exceed 50% at the temperature of +40℃,and higher relative humidity is allowed at lower temperature. For example, the air humidity can reach 90% at the temperature of +20℃. Regarding the condensation casually caused by humidity change, special measures shall be taken.

3.4 Class of pollution: Class Ⅲ

3.5 Installation category: category Ⅲ

3.6 The angle between the installation surface and the vertical surface shall not exceed ±5 degrees.

3.7 The place without obvious shake, impact and vibration shall be selected as the installation site.

3.8 The installation site shall conform to the following standards: explosive and dangerous medium, no gas capable of corroding and damaging insulation in the medium and less conductive dust in the medium

3.9 The place with rain-proof and snow-proof equipment and a little water vapor shall be used as the installation site.

4. Technical data

4.1 Main circuit: rated insulation voltage AC690V, rated frequency 50Hz

Model	Range of setting current (A)	Power suitable for motor (kW)
JD-8	0.5~5	0.25~2.5
	2~20	1~10
	20~80	10~40
	32~80	16~40
	64~160	32~80

4.2 Auxiliary circuit: rated insulation voltage AC380V, rated frequency 50Hz

Utility Category	AC-15	
Rated operating voltage (V)	220	380
Rated operating current (A)	1.5	0.95
Conventional thermal current (A)	5	

CE

«Электро-Профи» - www.ep.ru

5. Others

5.1 Structure characteristics

5.1.1 Three-phase electronic type

5.1.2 Function of phase failure and overload protection(not suitable for reversible motor)

5.1.3 Device capable of continuously adjusting setting current

5.1.4 The main circuit adopts pass-through-core type wiring method.

5.1.5 Installation method: installation via screws

5.2 The protector has the following operating characteristics for load balance of each phase; the tripping level is level 30.

Serial number	Multiple of setting current	Actuation time	Starting condition	Ambient air temperature
1	1.05	No actuation within 2h	Cold state	Room temperature (20±5)℃
2	1.2	Actuation within 2h	Hot state (the test is done following sequence 1)	
3	1.5	Actuation within 12min		
4	7.2	9s < tp≤30s	Cold state	

5.3 Wiring diagram

Wiring diagram of control circuit with voltage AC220V

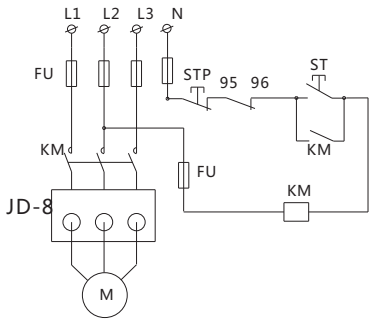

Wiring diagram of control circuit with voltage AC380V

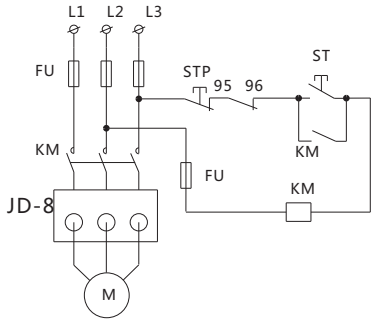

6. Overall and mounting dimensions (mm)

JD-8(0.5A~5A,2A~20A,20A~80A)



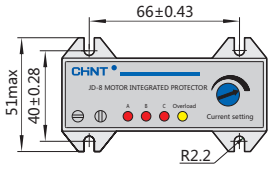

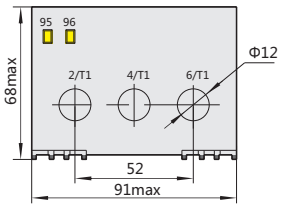

JD-8(32A~80A,64A~160A)



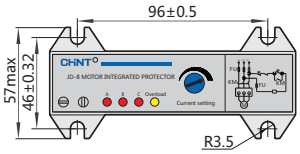

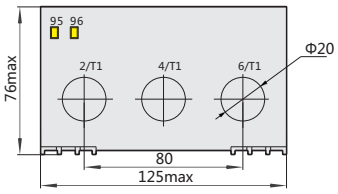

7. Ordering information

7.1 The protector with proper type number and specification shall be selected according to the use requirement.

7.2 Order quantity.

«Электро-Профи» - www.ep.ru



NJYB3 Relay

1. General

NJYB3 Relay is used to provide overvoltage,undervoltage, phase failure,phase sequence,three-phase unbalance,PTC temperature and load protection control in three-phase three-wire up to 415V circuits and three-phase four-wire up to 240V circuits with a frequency of AC50Hz.
This relay is a voltage protection relay.After detecting the voltage signal,the relay processes the input signal,judges if there is an overvoltage,undervoltage,phase failure,phase sequence,three-phase unbalance,PTC temperature and load error and controls the opration accurately and stably by means of the built-in microprocessor.

2. Type designation

N JYB 3 - □ □

- P:PTC temperature protection,optional (Refer to following table)
- 1~18 Function code
- Design S.N
- Relay
- Enterprise code

CE

3. Technical data

Model	Protection function	Protection operation time	Rated operational voltage	Contact capacity	Contact form	Electrical life	Mechanical life
NJYB3	Overvoltage	0.1s~10s	Three-phase three-wire system: AC380V~AC415V 50Hz	Ue/Ie:AC-15 240V/0.75A, 415V/0.47A; Ith:3A	1 Z	10^5	10^6
	Undervoltage						
	Three-phase voltage unbalance						
	Phase failure, phase sequence PTC temperature	≤1s	Three-phase four-wire system: AC220V~AC240V 50Hz				

«Электро-Профи» - www.ep.ru

Model	Three-phase	Three-phase four-wire	Single-phase/ two-phase	Overvoltage protection	Undervoltage protection	Unbalance protection	Phase sequence protection	Phase failure protection	PTC Temperature protection	Load protection
NJYB3-1	●	–	–	–	-	–	●	●	○	–
NJYB3-2	●	–	–	(1.05~1.30)×Us	-	–	–	●	–	–
NJYB3-3	●	–	–	–	(0.70~0.95)×Us	–	–	●	–	–
NJYB3-4	●	–	–	(1.05~1.30)×Us	(0.70~0.95)×Us	–	–	●	–	–
NJYB3-5	●	–	–	(1.05~1.30)×Us	(0.70~0.95)×Us	–	●	●	–	–
NJYB3-6	●	–	–	(1.05~1.30)×Us	(0.70~0.95)×Us	Fixed 20%	●	●	○	–
NJYB3-7	●	–	–	Fixed 120%×Us	Fixed 80%×Us	5%~15%	●	●	○	–
NJYB3-8	●	–	–	(1.05~1.30)×Us	(0.70~0.95)×Us	5%~15%	●	●	○	–
NJYB3-9	–	●	●	(1.05~1.30)×Us	-	–	–	●	–	–
NJYB3-10	–	●	●	–	(0.70~0.95)×Us	–	–	●	–	–
NJYB3-11	–	●	●	(1.05~1.30)×Us	(0.70~0.95)×Us	–	–	●	–	–
NJYB3-12	–	●	–	(1.05~1.30)×Us	(0.70~0.95)×Us	-	●	●	–	–
NJYB3-13	–	●	–	(1.05~1.30)×Us	(0.70~0.95)×Us	Fixed 20%	●	●	○	–
NJYB3-14	–	●	–	Fixed 120%×Us	Fixed 80%×Us	5%~15%	●	●	○	–
NJYB3-15	–	●	–	(1.05~1.30)×Us	(0.70~0.95)×Us	5%~15%	●	●	○	–
NJYB3-16	–	●	–	–	–	–	●	●	○	–
NJYB3-17P	●	–	–	–	–	–	–		●	–
NJYB3-18	●	–	–	(1.05~1.30)×Us	(0.70~0.95)×Us	Fixed 20%	●	●	–	●

Note: ● mean it must have this function;
– mean it certainly does not have this function;
○ mean this function can be chosen,or can be selected no.

Immunity

Item	Severity level
Electrostatic discharge immunity	8kV (air discharge)
Radiated electromagnetic field immunity	Test electric field strength: 10V/m
Fast transient immunity	For power line, 2kV, duration: 1min
Surge (impact) immunity	Open circuit test voltage: 1kV

4. Wiring diagram

NJYB3-1, NJYB3-2, NJYB3-3, NJYB3-4, NJYB3-5, NJYB3-6,NJYB3-7, NJYB3-8 Wiring diagram

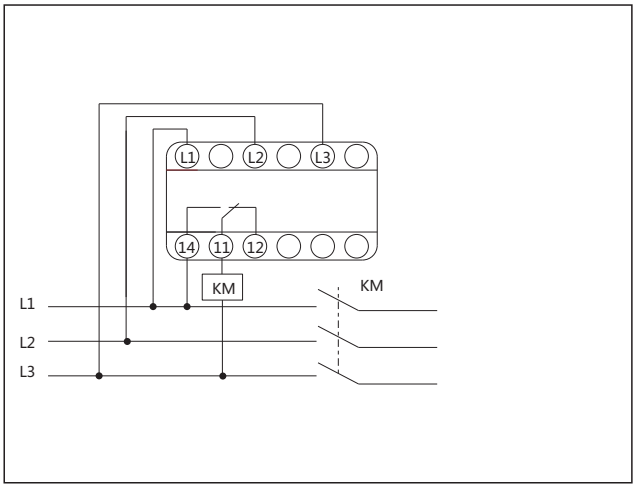

NJYB3-12, NJYB3-13, NJYB3-14, NJYB3-15, NJYB3-16 Wiring diagram

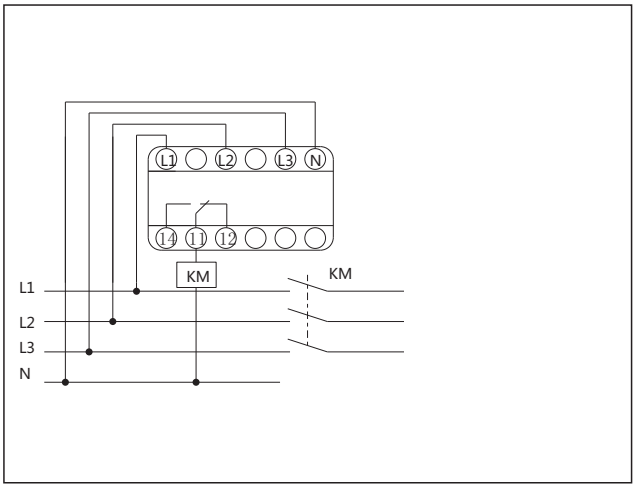

«Электро-Профи» - www.ep.ru

NJYB3-1P、NJYB3-6P、NJYB3-7P、NJYB3-8P、NJYB3-17P
Wiring diagram

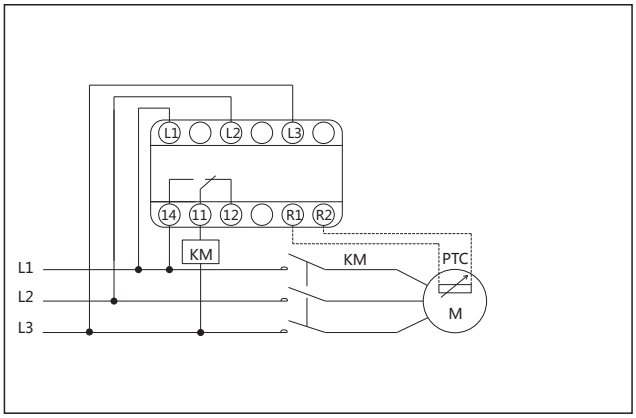

NJYB3-13P、NJYB3-14P、NJYB3-15P、NJYB3-16P
Wiring diagram

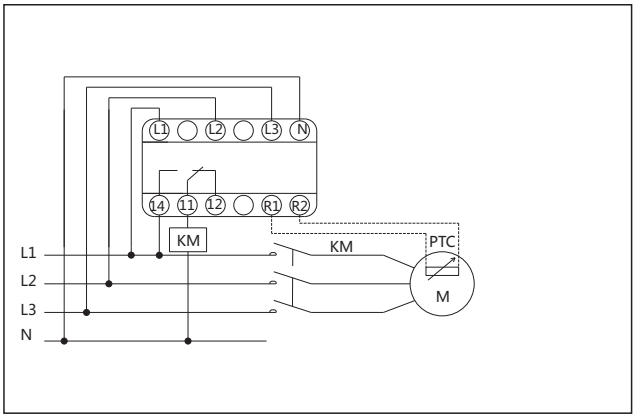

NJYB3-9、NJYB3-10、NJYB3-11 Wiring diagram

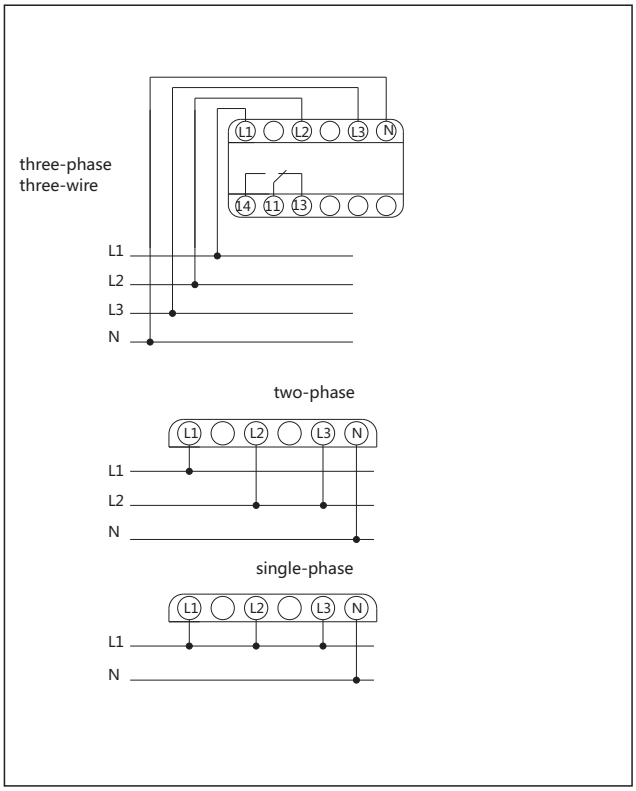

NJYB3-18 Wiring diagram

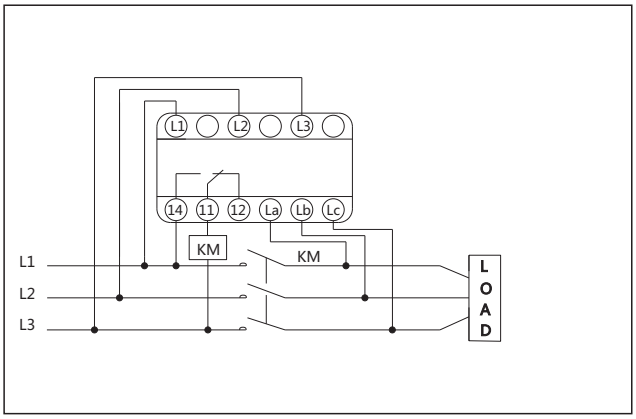

5. Overall and mounting dimensions (mm)

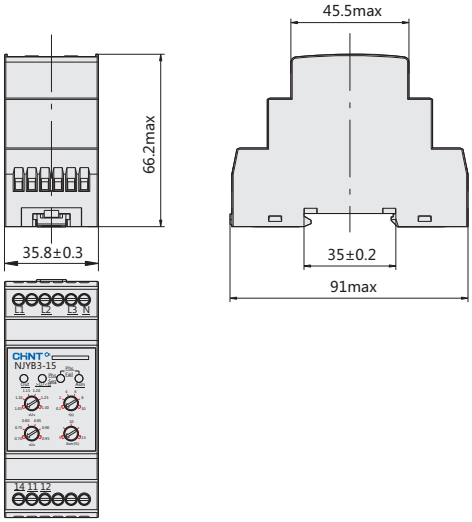

«Электро-Профи» - www.ep.ru



NJYB1 Phase-Failure and Phase-Sequence Protection Relay

1. General

This product is used in AC 50Hz three-phase four-wire 220V circuit to control the overvoltage,under-voltage,phase failure,phase sequence.

2. Type designation

2.1 Model and meaning

N J YB 1

- 1 — Design No.
- YB — Voltage protection
- J — Relay
- N — Corporation Code

2.2 Technical parameters

2.2.1 Fundamental parameter

a. Overvoltage protection: (1.0-1.3) Ue; undervoltage protection: (0.7-1.0) Ue.
b. Fault protection time: 0.1~9.9s.
c. Dielectric strength: there is no breakdown and flicker appeared for alternating current (50Hz) lasting a period of time of 1 s. under 2000V.
d. Insulation resistance: >100M (relative humidity at 20℃ is 90%).
e. Contact capacity: AC-15 220V 1A.
f. Contact resistance: 0.03Ω.
g. Contact life: life should ≥100, 000times.
h. Ambient temperature: -10℃~ +50 ℃.
i. Ambient humidity: ≤8% (20℃±5℃).
j. Installation mode: 35mmlC guide rail installation

2.3 Performance feature

S.N.	Fault type	Reacting time		Ambient air humidity
		Specified time	Inverse time	
1	Overvoltage protection	(0.1~9.9)s	$Tr = (Uon/Ur)^2 \times Tn$	Room temperature
2	Undervoltage protection	(0.1~9.9)s	$Tr = (Ur/Uun)^2 \times Tn$	
3	Phase-Failure protection	≤0.1s		
4	Phase-sequence protection	≤0.1s		

2.4 Time -voltage feature of voltage protector

Time-voltage feature of voltage protector

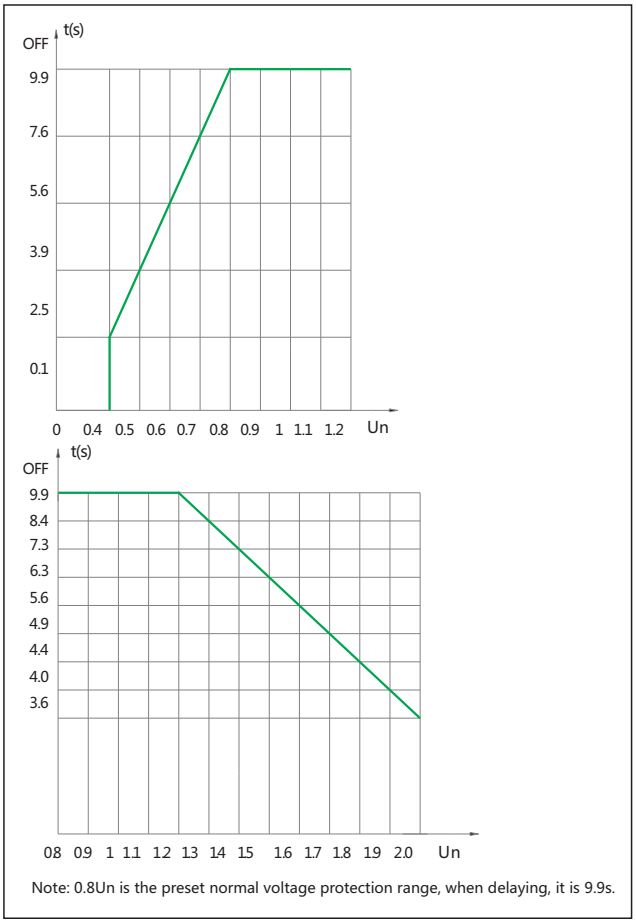

Note: 0.8Un is the preset normal voltage protection range, when delaying, it is 9.9s.

3. Wiring diagram

Wiring diagram for voltage protector

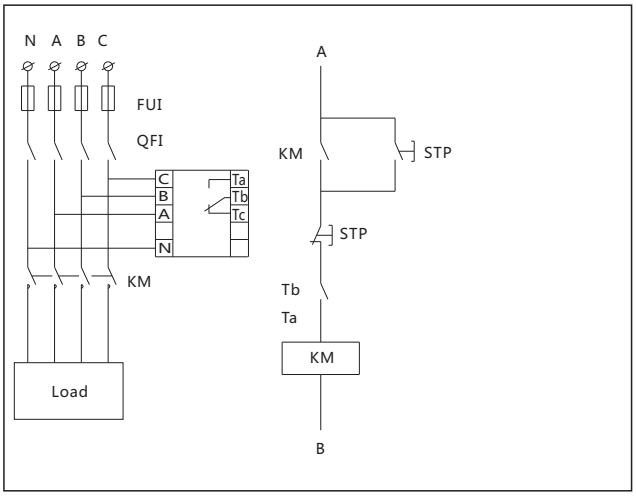

G

«Электро-Профи» - www.ep.ru



XJ3 Phase-Failure and Phase-Sequence Protective Relay

1. General

XJ3 series phase failure and phase sequence protection relay is used to provide overvoltage, undervoltage and phase failure protection in three-phase AC circuits and phase sequence protection in irreversible transmission devices and features reliable performance, wide application and convenient use.

The protector starts to function when it is connected to the power control circuit in accordance with the drawing. When the fuse of any phase of the three-phase circuit is open or when there is a phase failure in the power supply circuit, the XJ3 operates immediately to control the contact to cut off the power supply of the AC contactor coil of the main circuit so that the main contact of the AC contactor operates to provide the load with phase failure protection.

When the phases of a three-phase irreversible device with predetermined phase sequence are connected incorrectly due to maintenance or change of the power supply circuit, the XJ3 series will identify the phase sequence, stop supplying power to the power supply circuit and achieve the goal of protecting the device.

2. Type designation

XJ 3 - □/ □

- Rated power supply voltage
- Remodel (derived model)
  G: monochrome luminotron fault indication type;
  S: two-color luminotron fault indication type;
  D: multifunction protection, multimode indication type
- Design sequence No.
- Phase-failure and phase-sequence protective relay

«Электро-Профи» - www.ep.ru

3. Technical data

Type	XJ3-G	XJ3-S	XJ3-D
Protection function	Phase-failure Phase-sequence error & Three phase voltage unbalance≥8%~13%		Overvoltage Undervoltage Phase-failure Phase-sequence error
Overvoltage protection(AC)			380V~460V 1.5s~4s (adjustable)
Undervoltage protection(AC)			300V~380V 2s~9s(adjustable)
Operating voltage	AC 380V 50Hz/60Hz, Allowable fluctuating range±10%		AC 380V 50Hz
Contact number	1 normally open & 1 normally close		1 group changeover
Contact capacity	Ue/Ie:AC-15 380V/0.95A; Ith:5A		Ue/Ie:AC-15 380V/0.47A; Ith:3A
Phase-failure and phase-sequence protection	Reacting time≤2s		
Electrical life	1×10^5		
Mechanical life	1×10^6		
Ambient temperature	-5℃~40℃		
Installation mode	TH35-7.5(thickness 1.0 mm)rail		35mm Track installation or soleplate mounting

Note: In the example diagram for application circuit, protective relay can provide protection only under the condition of phase-failure occurring at terminal 1, 2, 3 and among three phase of power supply A, B, C.

4. Wiring diagram

XJ3-G, S wiring diagram

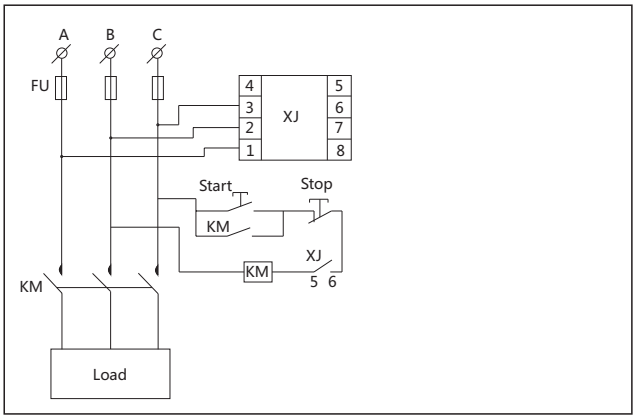

XJ3-D wiring diagram

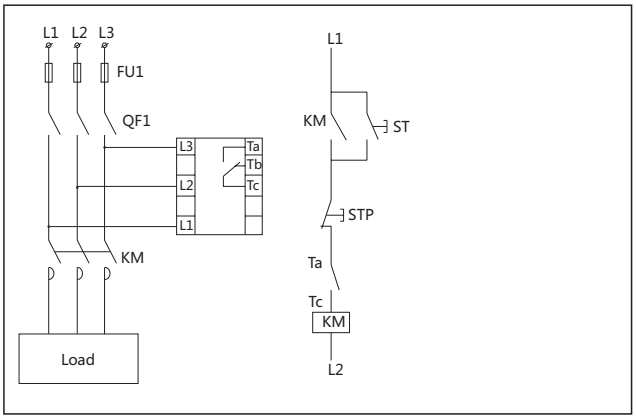

5. Overall and mounting dimensions (mm)

XJ3-G, S profile and installation dimension

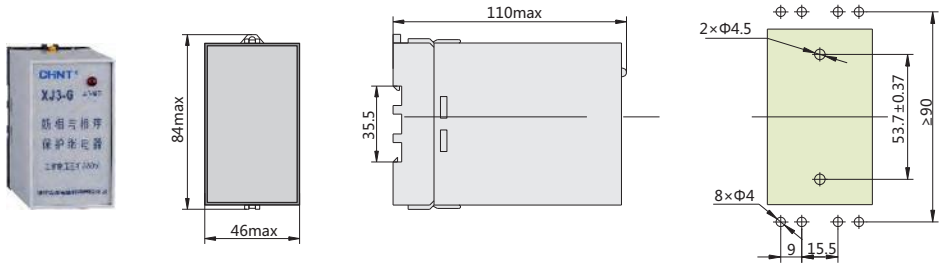

XJ3-D profile and installation dimension

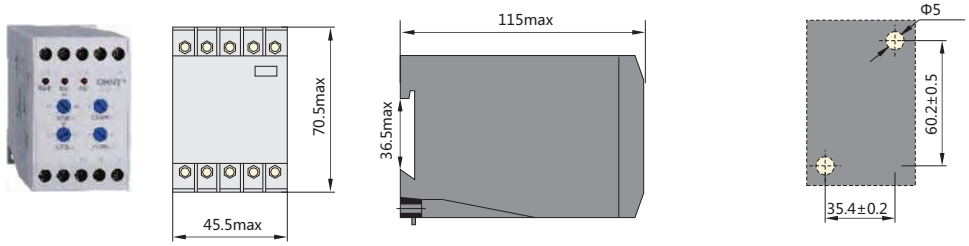

G

«Электро-Профи» - www.ep.ru



NJS1-H Time Delay Relay

1. General

NJS1-H series time delay relay (hereinafter referred to as relay) is used as a time control element in control circuits with an AC voltage of 240V or below and a frequency of 50Hz/60Hz and control circuits with a DC voltage of 240V or below to make and break the circuit according to the schedule.

2. Type designation

N JS 1 - H / □

- Rated control supply voltage
- Feature code: Improved type
- Design sequence No.
- Time delay relay
- Company code

«Электро-Профи» - www.ep.ru

3. Technical data

Mode	NJS1-H
Operating mode	On-delay (OND, OND1), trigger delay (OND2), On-off repetitive delay (FLY), interval delay (INT, INT1), optional
Number of contacts	Delay 1 change-over
Contact capacity	Ue/Ie: AC-15 220V/0.75A, 380V/0.47A; DC-13 220V/0.27A; Ith:5A
Solid state output	NPN solid state delay 1 ouptut
Solid state output capacity	Max 30VDC Max 100mA
Operational voltage	AC/DC(100~240)V 50Hz/60Hz DC24V
Electrical life	1×10^5
Mechanical life	1×10^6
Delay accuracy	Start timing from power on: ±0.01%±0.05s, start timing from signal ON: ±0.01%±0.03s
Timing mode	Addition or subtraction timing mode, optional
Contact output time	The output contacts have automatic reset function. The contact ouptut time is 10, 50, 100, 200, 500, 1000, 2000, 5000 or Hold, optional. (unit: ms)
Ambient temperature	-5℃~+40℃
Mounting type	Panel type
Delay range	For single product, 99.99s/999.9s/9999s/99min59s/999.9min/9999min/99h99min/9999h, optional

4. Wiring diagram

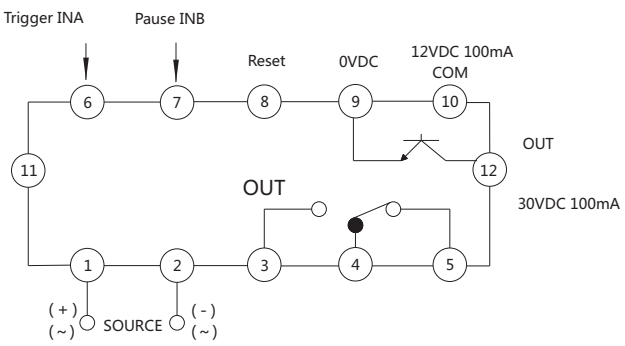

5. Overall and mounting dimensions (mm)

Profile and installation dimension

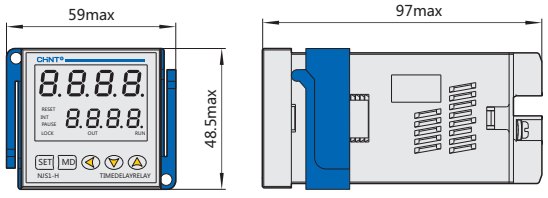

Opening size

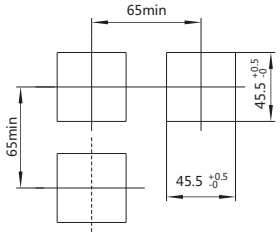

G

«Электро-Профи» - www.ep.ru

6. Profile and installation dimension

Output mode	Timing-sequence diagram
On delay ond	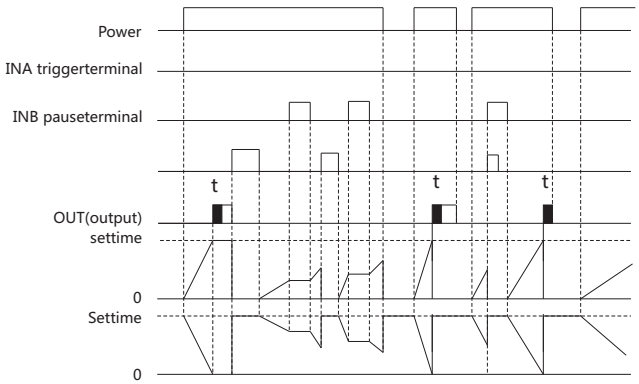 POWER ON DELAY(counting resets when power OFF)
On delay ond.1	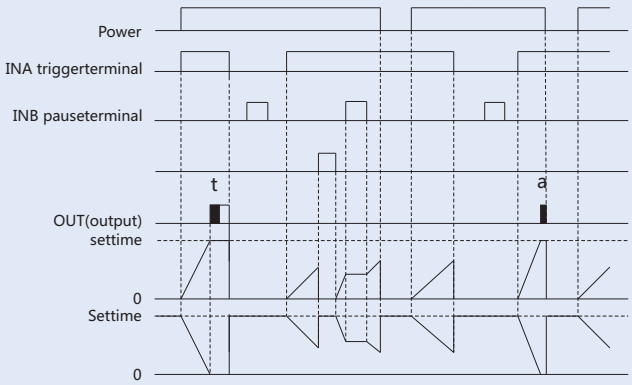 POWER ON DELAY(counting continues when power OFF)
Trigger delay ond2	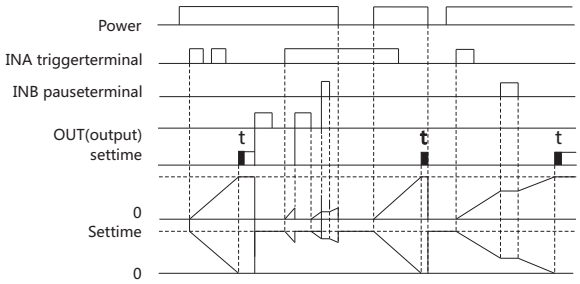 SIGNAL ON DELAY1(resets when power OFF)
Loop delay FLY	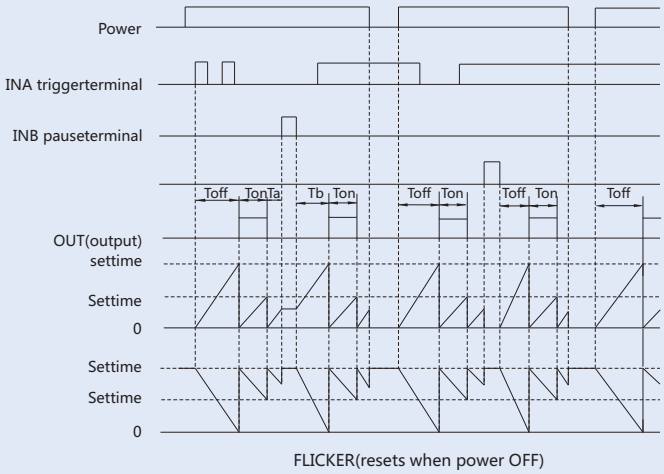 FLICKER(resets when power OFF)

«Электро-Профи» - www.ep.ru

Output mode	Timing-sequence diagram
Interval delay	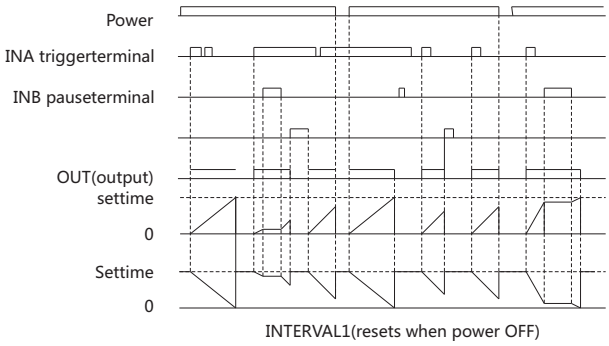 INTERVAL1(resets when power OFF)
Interval delay	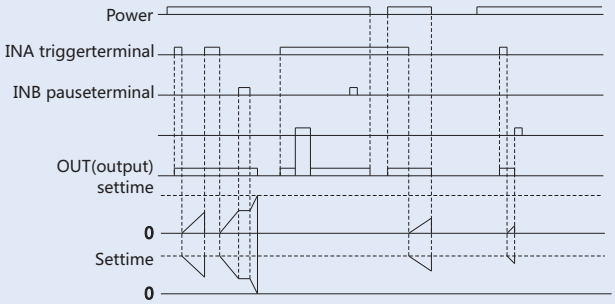 SIGNAL OFF DELAY(resets when power OFF)
Note	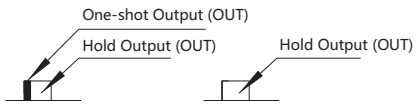

G

«Электро-Профи» - www.ep.ru



NJS1-M Time Delay Relay

1. General

NJS1-M Series Time Relay is applicable for controlling circuit @ A.C. 50Hz/60Hz, up to 240V rated supply voltage and up to D.C. 240V rated supply voltage as delay element to make or break circuit according to preset time.

2. Type designation

N JS 1 - M / □

- Rated control supply voltage
- Feature code: Enhanced type
- Design S.N.
- Time-delay relay
- Enterprise feature code

Note: This product is applicable for wide range operating voltage, for instance, operating voltage within AC/DC 100V ~ 240V means it can operate normally within the voltage range of AC/DC 100V to 240V.

CE

«Электро-Профи» - www.ep.ru

3. Technical data

Operating mode	(power) on delay (OND, OND1), trigger-delay (OND2), reciprocate-delay (FLY), interval-delay (INT, INT1) are available for option
Contact number	Delay 1 changeover
Contact capacity	Ue/Ie: AC-15 220V/0.75A, 380V/0.47A; DC-13 220V/0.27A; Ith:5A
Solid-state output	NPN solid-state delay 1 output
Solid-state output capacity	Max 30VDC max 100mA
Operating voltage	AC36V, AC/DC100V~240V 50Hz/60Hz
Electrical life	1×10^5
Mechanical life	1×10^6
Delay precision	Power supply ON start timing: ≤±0.01%±50ms Signal ON start timing: ≤±0.01%±30ms
Timing mode	Plus & minus timing mode are available for option
Contact output time	Contact output is equipped with function of automatic reset, contact output time 10, 50, 100, 200, 500, 1000, 2000, 5000, and Hlod are available for option (unit: ms)
Ambient temperature	-5℃~+40℃
Installation mode	Panel type

Delay range

Type	99.99s, 999.9s, 9999s, 99min59s, 999.9min, 9999min, 99h59min, 9999h are optional for each product

4. Wiring diagram

NJS2-M Wiring diagram

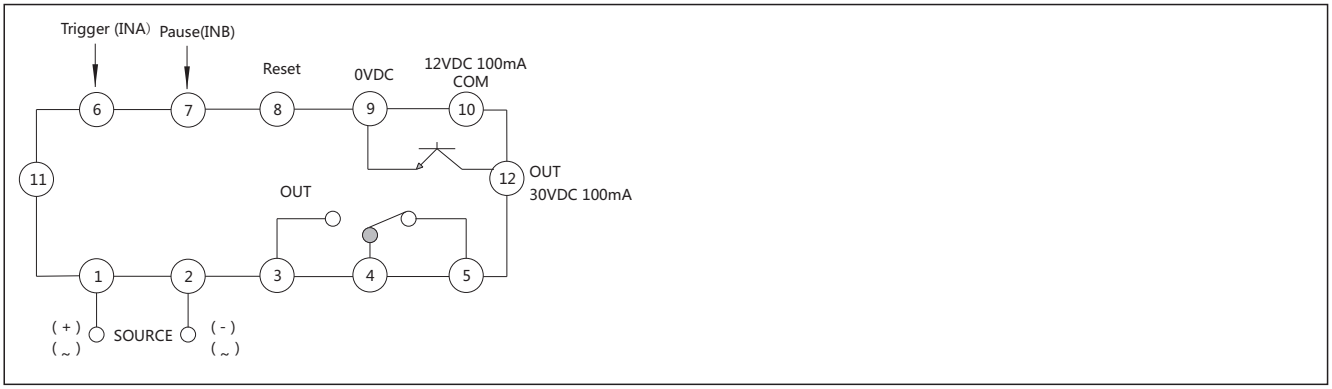

5. Overall and mounting dimensions (mm)

Profile and installation dimension

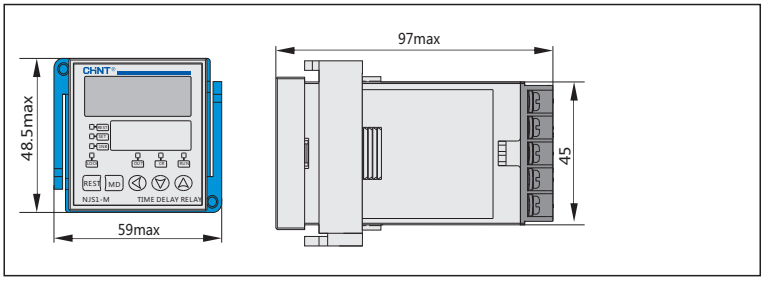

Opening size

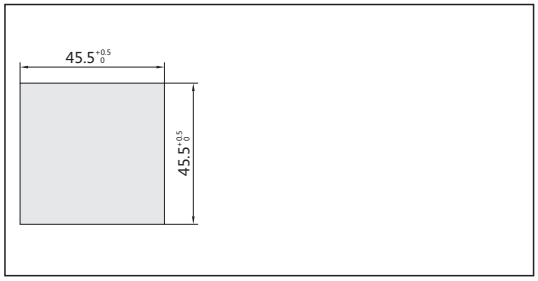

G

«Электро-Профи» - www.ep.ru

6. Profile and installation dimension

Output mode	Timing-sequence diagram
(power) on delay ond	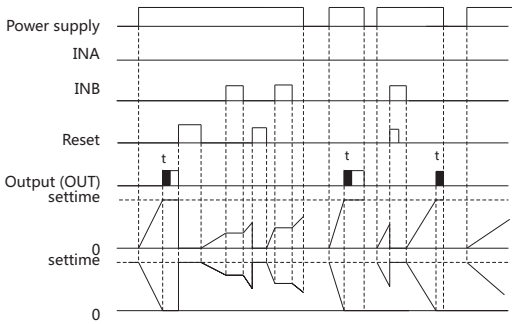 POWER ON DELAY (Power supply OFF Timing Reset)
(power) on delay ond.1	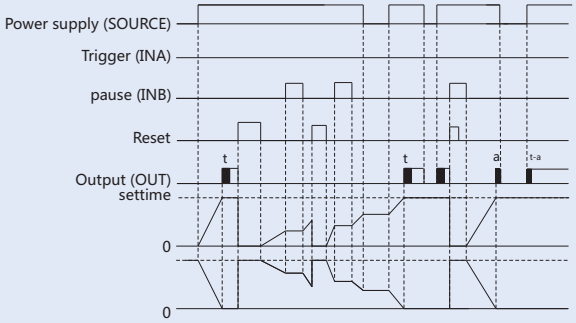 POWER ON DELAY (Power supply OFF Timekeeping)
Trigger-delay ond2	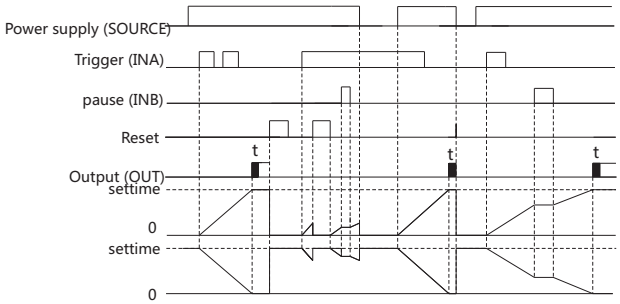 SIGNAL ON DELAY1(Power supply OFF Reset)
Circulation-delay FLY	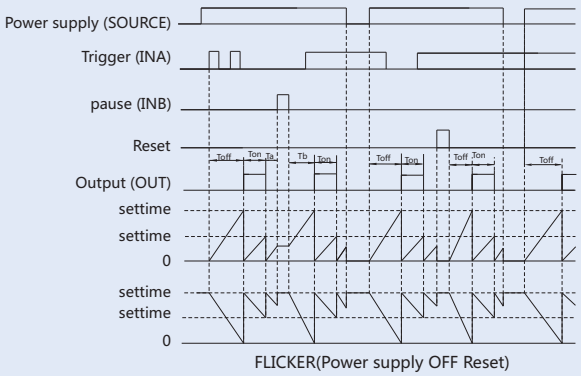 FLICKER(Power supply OFF Reset)

«Электро-Профи» - www.ep.ru

Output mode	Timing-sequence diagram
Interval-delay	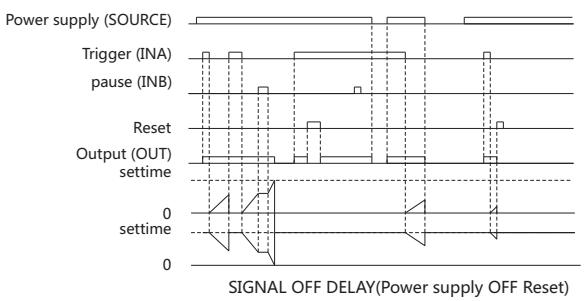 SIGNAL OFF DELAY(Power supply OFF Reset)
Interval-delay	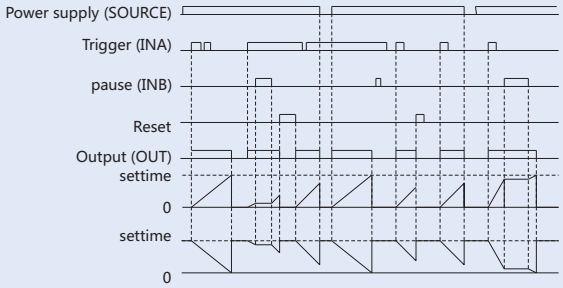 INTERVAL1 (Power supply OFF Reset)
Note	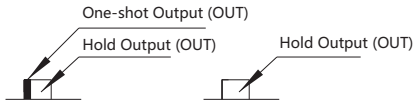

G

«Электро-Профи» - www.ep.ru



NJS1 Time Delay Relay

1. General

NJS1 Series Time-Delay Relay is applicable for controlling circuit @ A.C. 50Hz/60Hz, up to 380V rated voltage or up to D.C.240V rated voltage as delay element to make or break circuit according to preset time.

2. Type designation

N JS1- □ / □

- Rated control supply voltage
- Feature code:
  - No mark: Conversion of delay group I with external reset and pause functions
  - 2Z: Conversion of delay group Ⅱ
  - 11: Conversion of delay group Ⅱ with external reset and pause functions
  - K: Conversion of delay group I, and instantaneous group I
  - S: Conversion of delay group I, cyclical delay
- Design sequence No.
- Time delay relay
- Company code

Note: This product is applicable for wide range operating voltage, for instance, operating voltage within AC/DC24V～48V means it can operate normally within the voltage range of AC/DC 24V to 48V.

CE

«Электро-Профи» - www.ep.ru

3. Technical data

Type	NJS1	NJS1-2Z	NJS1-11	NJS1-K	NJS1-S
Operating mode	power on delay	power on delay	power on delay	power on delay	Circulation-delay
Contact number	Delay 1 changeover	Delay 2 changeover	Delay 2 changeover	Delay 1 changeover Instantaneous 1 changeover	Delay 1 changeover
Contact capacity	Ue/Ie:AC-15 220V/0.75A,380V/0.47A; DC-13 220V/0.27A; Ith:5A				
Turn-on (Power) on delay type Delay range	Time-base code	0.01s / 0.1s / s / 10s / m/s / 0.1m / m / h/m / 0.1h / h			
	Setting range	0.01s~99.99s / 0.1s~999.9s / 1s~9999s / 10s~99990s / 1s~99min99s / 0.1min~999.9min / 1min~9999min / 1min~99h99min / 0.1h~999.9h / 1h~9999h			
Circulation-delay type Delay range	Time-base code	0.1s / 1s / 0.1min / 1min / 0.1h / 1h / 10s			
	Setting range	0.1s~9.9s / 1s~99s / 0.1min~9.9min / 1min~99min / 0.1h~9.9h / 1h~99h / 10s~990s			
Operating voltage	AC/DC: 24V~48V,100V~240V, AC220V, AC380V				
Repeat pause function	Have	N/A	Have	N/A	Have
Electrical life	1×10^5				
Mechanical life	1×10^6				
Delay precision	≤0.5%±50ms				
Ambient temperature	-5℃~+40℃				
Power consumption	≤3VA				
Installation mode	Panel type, Device type				
Matched pedestal	Panel type CZS08S, CZS11S, CZS08G, CZS11G, Device type CZS08C, CZS11C				

4. Wiring diagram

NJS1-2Z Wiring diagram

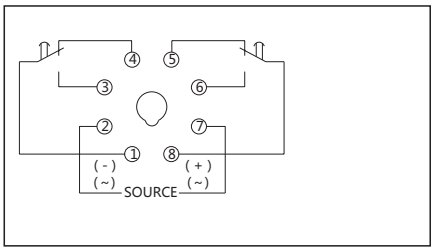

NJS1 Wiring diagram

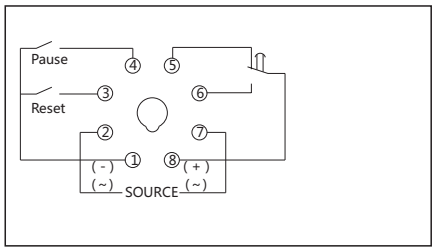

NJS1-S Wiring diagram

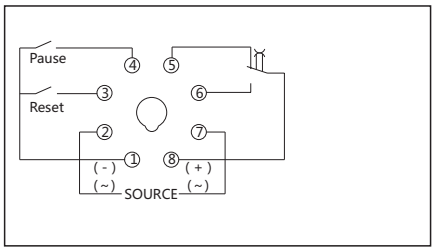

NJS1-11 Wiring diagram

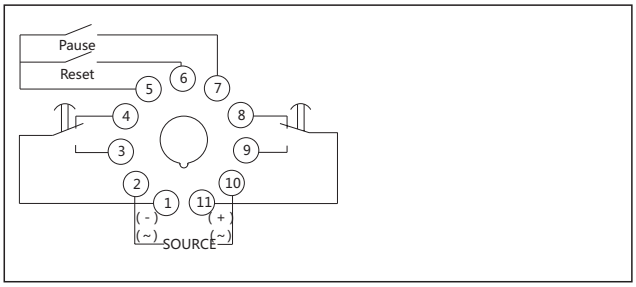

NJS1-K Wiring diagram

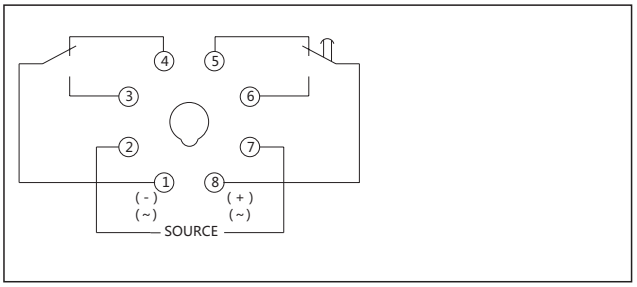

5. Overall and mounting dimensions (mm)

Profile and installation dimension

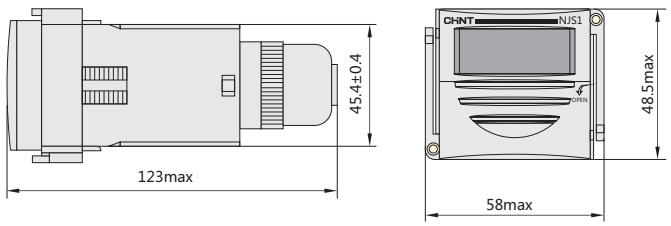

Opening size

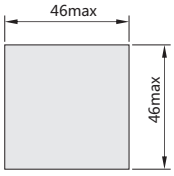

G

«Электро-Профи» - www.ep.ru



NJS5 Time Relay

1. General

NJS5 series time relay is mainly used as time control device for control circuit with AC frequency 50Hz/60Hz, rated control supply voltage up to 400V and DC rated control supply voltage to 24V to make or break the circuit at a predetermined time.

2. Type designation

N JS 5 - □ □ / □

- Rated control supply voltage
- Delay specifications
- A: Power on delay
  B: Interval delay
  Y: Star - Delta Starters delay
  M1: power-on delay (multi range type)
- Design number
- Time relay
- Enterprise features of the code

CE

3. Technical data

Product Model	NJS5-A	NJS5-B	NJS5-Y	NJS5-M1
Work mode	Power on delay	Interval delay	Star - Delta Starters delay	Power on delay
Rated control supply voltage	AC220V,AC380V		AC380V	AC36V,AC110V,AC220V,AC230V, AC380V,AC400V,DC24V
Number of Contacts	Delay 1 CO		Delay 2 NO	Delay 1 CO
Star - delta conversion time	-	-	20ms ~ 300ms (adjustable)	-
Contact capacity	Ue/Ie:AC-15 220V/0.75A, 380V/0.47A; DC-13 220V/0.27A; Ith:5A			
Electrical life	3×10^4			1×10^5
Mechanical life	1×10^6			
Delay specifications	5s,10s,30s,60s,2min,3min,5min,10min,20min			1s, 10s, 1min, 10min, 1h, 10h, 1d, 10d (multi range type, adjustable)
Ambient temperature	-5℃~+40℃			
Installation	Guide rail			

4. Wiring diagram

NJS5-A,NJS5-M1wiring diagram

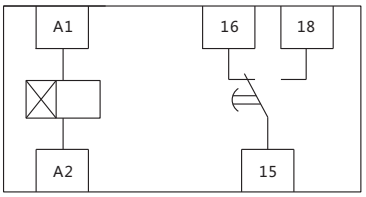

NJS5-B wiring diagram

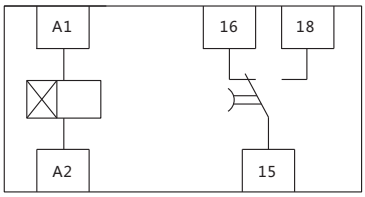

NJS5-Y wiring diagram

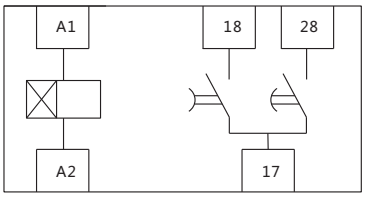

«Электро-Профи» - www.ep.ru

5. Overall and mounting dimensions (mm)

NJS5-A,NJS5-B outside dimensions

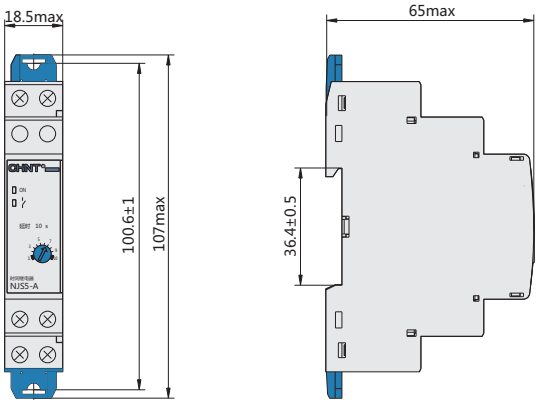

NJS5-Y outside dimensions

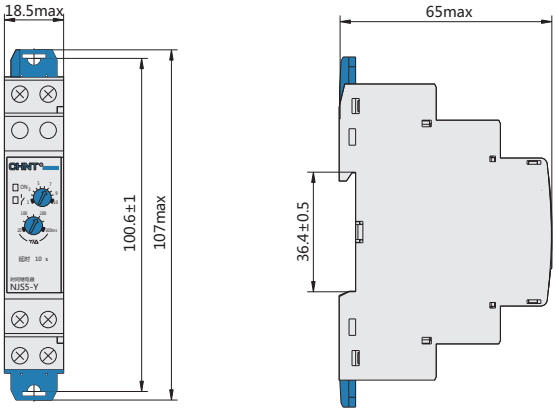

NJS5-M1 outside dimensions

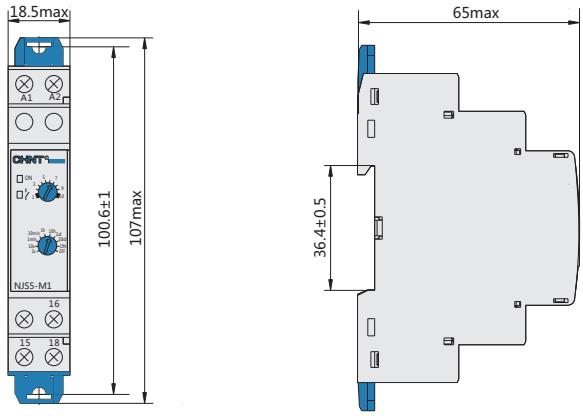

G

«Электро-Профи» - www.ep.ru



NJS5-M2 Time Relay

1. General

NJS5-M2 time relay mainly applies to control circuits with 50Hz/60Hz AC rated control supply voltage to 400V and DC rated control supply voltage to 24V as time control element, to connect or disconnect circuit by scheduled time.

2. Type designation

N JS 5 - M2/ □

- Rated control supply voltage
- M2: Multi-delay type (Multi-gear type)
- Design number
- Time replay
- Enterprise feature code

3. Technical data

Product model	NJS5-M2
Working mode	On-delay, off-delay, interval delay, off-delay/interval delay, equal period cyclical delay (ON start),equal period cyclical delay (OFF start), Trigger/interval delay, 7 adjustable gears
Rated control supply voltage	AC110V,AC220V,AC230V,AC240V,AC380V,AC400V,DC24V
Quantity of contacts	Delay 1 conversion
Contact capacity	1s, 10s, 100s, 10min, 100min, 10h, 100h (Multiple adjustable gears)
Electrical life	Ue/Ie:AC-15 220V/0.75A,380V/0.47A;DC-13 220V/0.27A;Ith:5A
Mechanical life	1×10^5
Delay specification	1×10^6
Ambient temperature	-5℃~+40℃
Installation method	Guide rail type or device type

4. Wiring diagram

NJS5-M2 wiring diagram

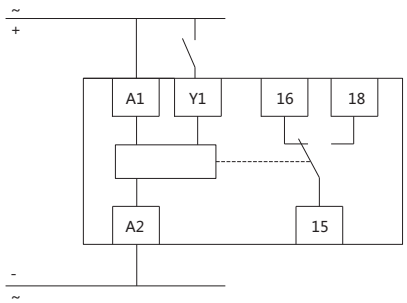

«Электро-Профи» - www.ep.ru

5. Overall and mounting dimensions (mm)

NJS5-M2 dimensions

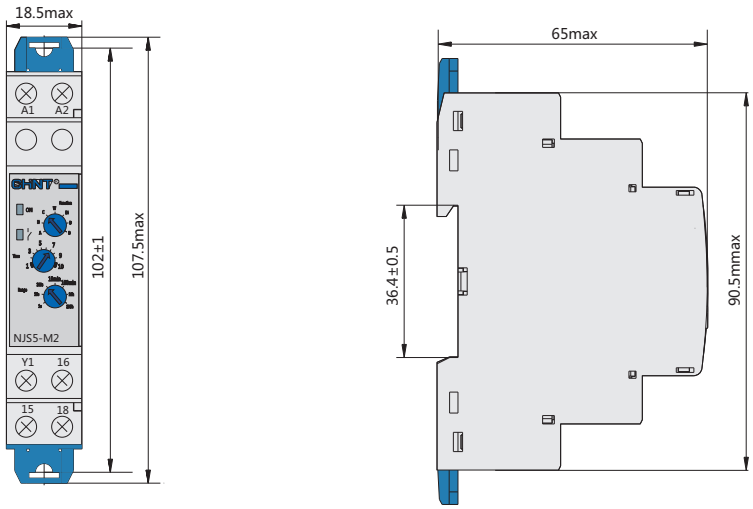

G

«Электро-Профи» - www.ep.ru



NJS3 Time Relay

1. General

NJS3 series time relay mainly used as time control component for control circuit with AC 50Hz/60Hz, rated control power supply voltage to 220V, make or break the circuit at a preset time.

2. Type designation

N JS 3 - □/□

- Rated control supply voltage
- None: interval delay
  A: off-delay
  B: Power on delay
- Design Code
- Time delay relay
- Enterprise features code

CE

3. Technical data

Product Model	NJS3	NJS3-A	NJS3-B
Work mode	Interval delay	Breaking delay	Power on delay
Number of Contacts	Delay 1 normally open		
Rated control supply voltage	AC220V,AC110V		
Contact capacity	Ue/Ie:AC-15 220V/3A,380V/1.9A; DC-13 24V/1.1A; Ith:16A		
Electrical life	1×10^5		
Mechanical life	1×10^6		
Ambient temperature	-5℃ ~ +40℃		
Delay range	0.5min~20min	5s,10s,30s,60s,120s,180s,360s,480s, 5min,10min,30min,60min,120min,180min,360min,480min	
Power consumption	≤3VA		
Installation	Guide rail		
Reset time	≤1s		

4. Wiring diagram

Figure 2 NJS3 wiring

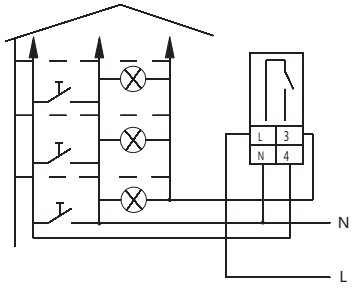

NJS3 wiring (line 3)

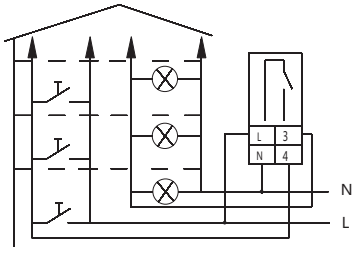

NJS3 wiring (4-wire)

«Электро-Профи» - www.ep.ru

Figure 3 NJS3-A wiring

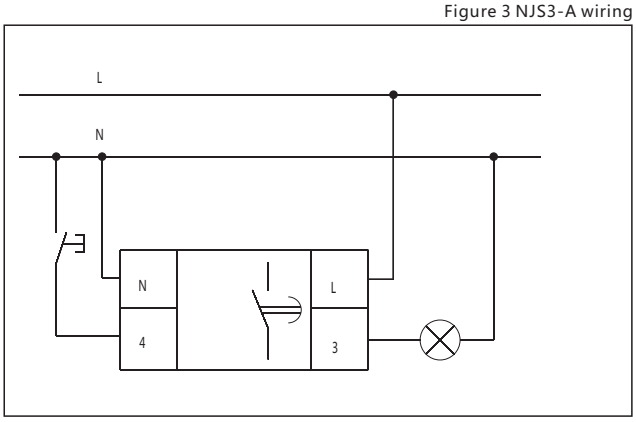

Figure 4 NJS3-B wiring

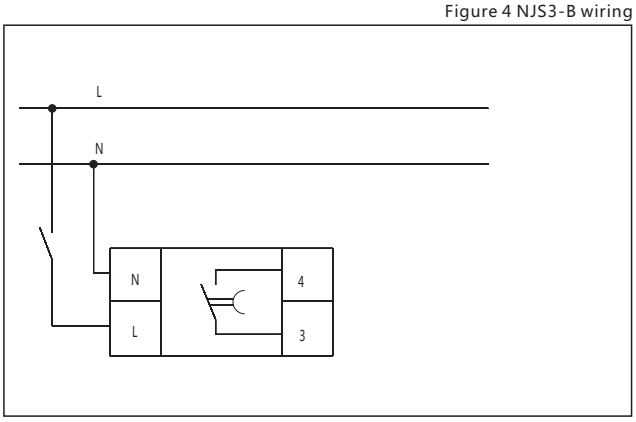

5. Overall and mounting dimensions (mm)

Mounting size: TH35-7.5 steel mounting rail

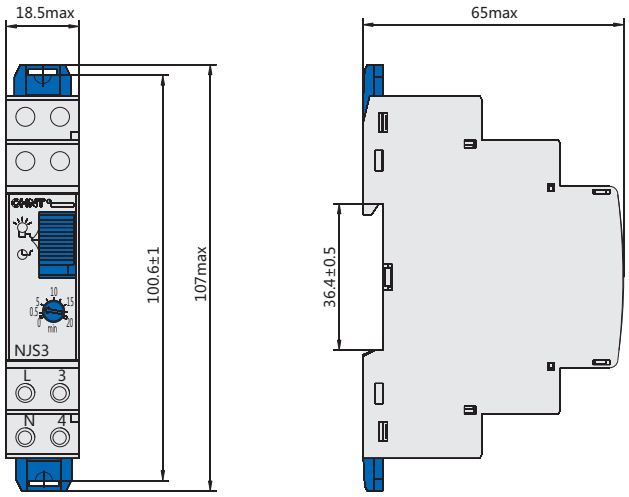

G

«Электро-Профи» - www.ep.ru



NTE8 Time Delay Relay

1. General

NTE8 Series time delay relay is applicable for controlling circuit @AC 50Hz/60Hz, up to 230V rated voltage or up to DC 24V rated voltage as delay element to make or break circuit according to preset time.
This product meets the requirements of IEC60947-5-1.

2. Type designation

N TE 8 - □ □

- Operating mode: A: control-off delay; B: (power) on delay
- Delay range
- Design serial number
- Time delay relay
- Company code

CE

3. Technical data

Type	NTE8
Operating mode	Control-off delay/(power) on delay
Delay range	0.1s~10s, 10s~120s, 30s~480s
Number of contacts	Delay 1 N/O
Contact capacity	Ue/Ie:AC-15 230V/1A; DC-13 30V/1A; Ith:5A
Operational voltage	AC230V, AC24V, DC24V
Electrical life	1×10^5
Mechanical life	1×10^6
Ambient temperature	-5℃~+40℃
Mounting type	Rail type

Figure 2 NTE8-□A Relay wiring diagram

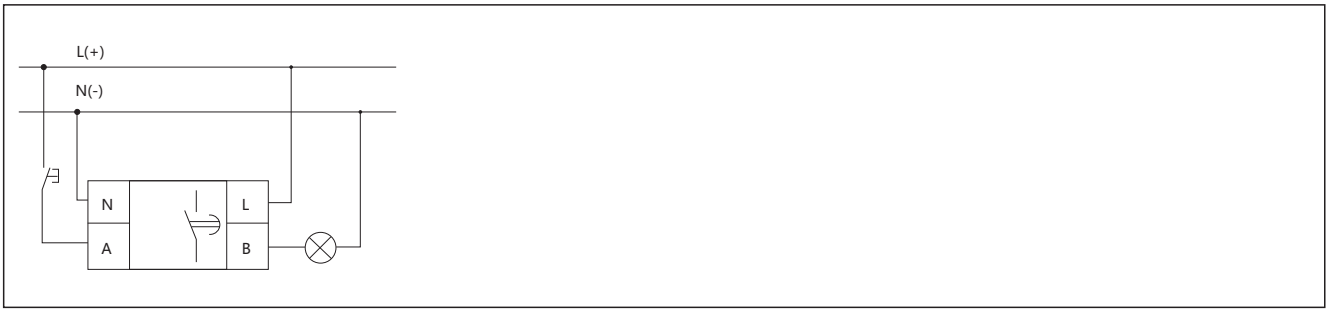

«Электро-Профи» - www.ep.ru

Figure 3 NTE8-□B Relay wiring diagram

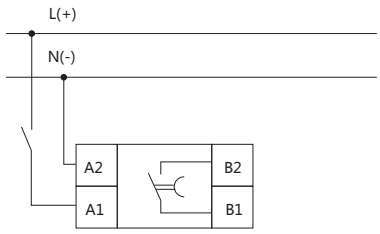

4. Overall and mounting dimentions (mm)



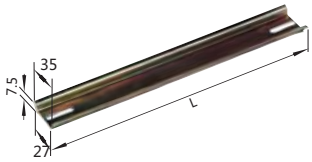

Adopt TH35-7.5 sectional steel guide rail for installation

G

«Электро-Профи» - www.ep.ru



JSS48A Time Delay Relay

1. General

JSS48A Time Delay Relay is applicable for controlling circuit @ A.C.50Hz/60Hz, up to 380V rated control supply voltage and up to D.C. 240V rated control supply voltage as delay element to make/break circuit according to preset value.

2. Type designation

JSS 48 A - □ □ / □

- Rated control supply voltage
- Time delay specification
- Feature code
  - Nil: means 8-pin power delay one group changeover, equipped with function of reset, pause (multi-range delay)
  - 2Z: means 8-pin power delay two group changeover (multi-range delay)
  - 11: means 11-pin power delay two group changeover, equipped with function of reset, pause (multi-range delay)
  - S: means 8-pin circulation-delay one group changeover, equipped with function of reset, pause (multi-range delay)
  - P2: means 2 digit dial-up setting, indicator type 8-pin power delay two group changeover (single delay)
  - P3: means 3 digit dial-up setting, indicator type 8-pin power delay two group changeover (single delay)
  - P4: means 4 digit dial-up setting, indicator type 8-pin power delay two group changeover (single delay)
  - G2: means 2 digit dial-up setting, 8-pin power delay two group changeover (single delay)
  - G3: means 3 digit dial-up setting, 8-pin power delay two group changeover (single delay)
  - G4: means 4 digit dial-up setting, 8-pin power delay two group changeover (single delay)
- Derived code
- Design sequence No.
- Time delay relay

Note: This product is applicable for wide range of operating voltage, for instance, operating voltage within AC/DC24V~48V means it can operate normally within the voltage range of AC/DC 24V to 48V.

CE

«Электро-Профи» - www.ep.ru

3. Technical data

3.1 Main specifications see Table

Type	JSS48A	JSS48A-2Z	JSS48A-11	JSS48A-G	JSS48A-P	JSS48A-S
Operating mode	Power on delay	Power on delay	Power on delay	Power on delay	Power on delay	Circulation-delay
Contact number	Delay 1 changerover	Delay 2 changerover	Delay 2 changerover	Delay 2 changerover	Delay 2 changerover	Delay 1 changerover
Contact capacity	Ue/Ie:AC-15 220V/0.75A,380V/0.47A; DC-13 220V/0.27A; Ith:5A					
Operating voltage	AC/DC: 24V~48V, 100V~240V, AC220V, AC380V, 50Hz/60Hz					
Electrical Endurance	1×10^5					
Mechanical Endurance	1×10^6					
Delay precision	≤1%					
Ambient temperature	-5℃~+40℃					
Power consumption	≤3VA					
Installation mode	Panel type					

Type	Delay range
JSS48A	1s~99min99s, 1min~99h99min, 0.01s~99.99s
JSS48A-11	
JSS48A-2Z	
JSS48A-S	1s~99s, 1min~99min, 1h~99h
JSS48A-G2	0.1s~9.9s, 1s~99s, 0.1min~9.9min, 1min~99min
JSS48A-P2	
JSS48A-G3	0.01s~9.99s, 0.1s~99.9s, 1s~999s, 0.1min~99.9min, 1min~999min
JSS48A-P3	
JSS48A-G4	0.01s~99.99s, 0.1s~999.9s, 1s~9999s, 0.1min~999.9min, 1min~9999min, 0.1h~999.9h
JSS48A-P4	

4. Wiring diagram

JSS48A Wiring diagram

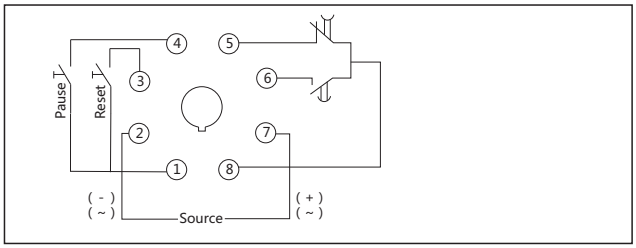

JSS48A-2Z, JSS48A-G, JSS48A-P Wiring diagram

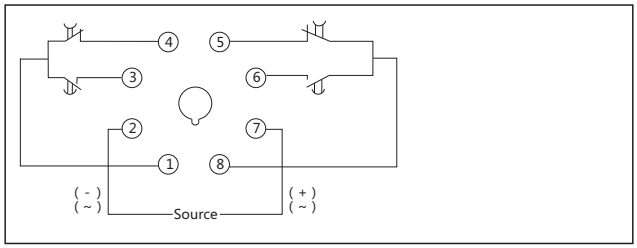

JSS48A-11 Wiring diagram

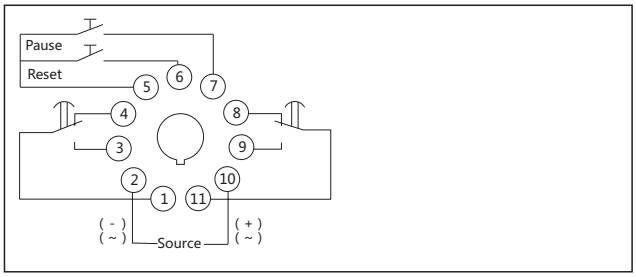

JSS48A-S Wiring diagram

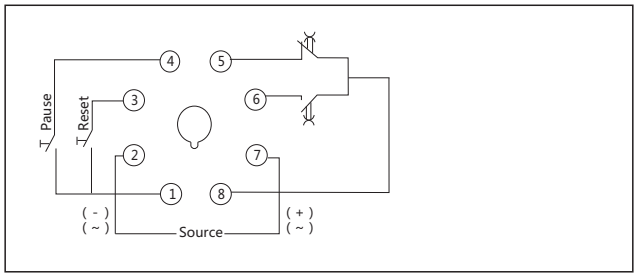

G

«Электро-Профи» - www.ep.ru

5. Overall and mounting dimensions (mm)

Profile and installation dimension

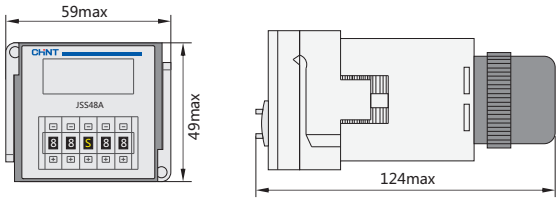

Opening size

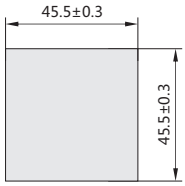

«Электро-Профи» - www.ep.ru



JSZ3 Time Delay Relay

1. General

JSZ3 Time Delay Relay is applicable for automatic control system, such as machine automatic control, and complete equipment automatic control, etc.

2. Type designation

JS Z 3 □ - □

- Adopt A, B, C, D, E, F, G to represent delay rang code (applicable for multi-range type)
- A: basic type (power on delay, multi-range type)
  C: instantaneously operation type (power on delay, multi-range type)
  F: power off delay type
  Y: delta start-delay type (power on delay)
  K: control off-delay
  R: repeat circulation-delay type (power on delay)
- Design sequence No.
- Integrative type
- Time Delay Relay

G

«Электро-Профи» - www.ep.ru

3. Technical data

Type	JSZ3A	JSZ3C	JSZ3F	JSZ3K	JSZ3Y	JSZ3R
Operating mode	power on delay	JSZ3C power on delay with instantaneously operation contact	power off delay	Signal breaking-delay	Delta start-delay	Reciprocating circulation-delay
Delay range	A: (0.05-0.5)s/5s/30s/3min		(0.1-1)s (0.5-5)s (1-10)s (2.5-30)s (5-60)s (15-180)s	(0.1-1)s (0.5-5)s (1-10)s (2.5-30)s (5-60)s (15-180)s		
	B: (0.1-1)s/10s/60s/6min				(0.1-1)s	(0.5-6)s/60s
	C: (0.5-5)s/50s/5min/30min				(0.5-5)s	(1-10)s/10min
	D:(1-10)s/100s/10min/60min				(1-10)s	(2.5-30)s/30min
	E: (5-60)s/10min/60min/6h				(2.5-30)s	(5-60)s/60min
	F:(0.25-2)min/2min/2h/12h				(5-60)s	
	G:(0.5-4)min/40min/4h/24h					
Set mode	Potentiometer					
Operating voltage	AC50Hz/60Hz, 36V, 110V, 127V, AC220V AC380V DC24V		AC50Hz/60Hz, 36V, 110V, 127V AC220V AC380V DC24V	AC50Hz/60Hz AC110V AC220V AC230V AC380V AC400V DC24V	AC36V,AC110V 50Hz/60Hz AC220V AC380V DC24V	AC36V,AC110V 50Hz/60Hz AC220V AC380V DC24V
Delay precision	≤10%		≤10%	≤10%	≤10%	≤10%
Contact number	Delay 2 switching, delay 1 changeover, instantaneous switching		Delay 1 switching or delay 2 switching	Delay 1 switching	Delay Delta 1 switching	Delay 1 switching
Contact capacity	Ue/Ie: AC-15 220V/0.75A, 380V/0.47A; DC-13 220V/0.27A;Ith:5A					
Electrical Endurance	1×10^5					
Mechanical Endurance	1×10^6					
Ambient temperature	-5℃~+40℃					
Installation mode	Equipment type, Panel type, DIN-rail type					
Matched pedestal	Panel type: FM8858, CZS08S, Equipment type,CZS08X-E					

4. Wiring diagram

JSZ3A

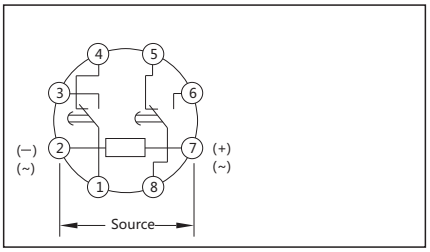

JSZ3C

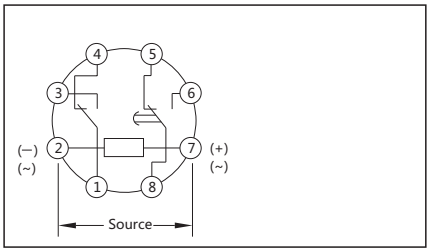

JSZ3F

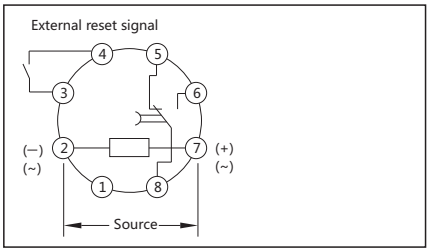

JSZ3K

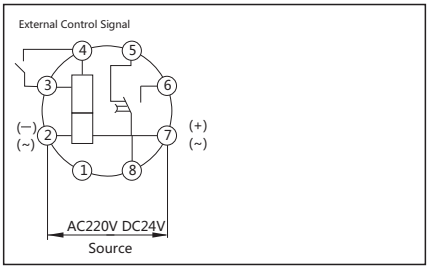

JSZ3Y

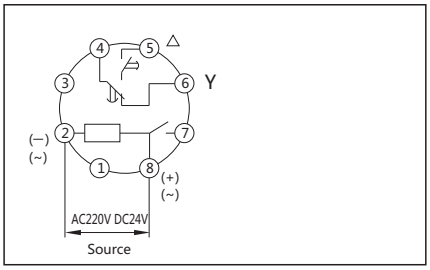

JSZ3R

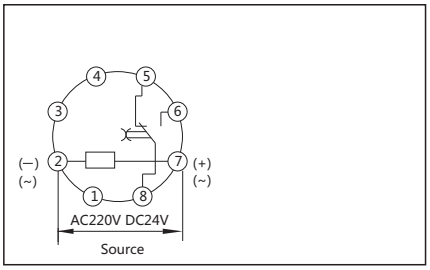

«Электро-Профи» - www.ep.ru

5. Overall and mounting dimensions (mm)

JSZ3A-,C-, F, K, Y Profile and installation dimension

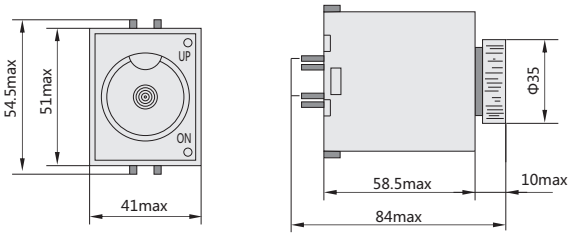

JSZ3R Profile and installation dimension

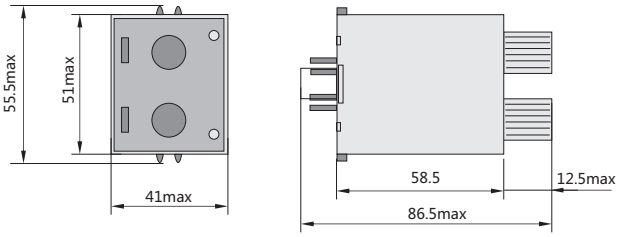

Opening size

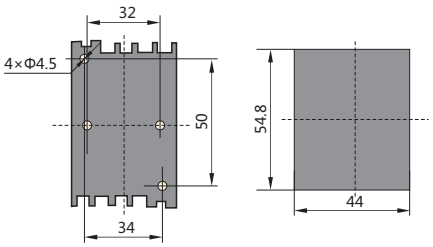

G

«Электро-Профи» - www.ep.ru



JSZ6 Time Delay Relay

1. General

JSZ6 Time Delay Relay is applicable for automatic control system, such as machine tool automatic control, complete equipment automatic control. Etc.

2. Type designation

JS Z 6 - □

- 2: Delay 2 changeover; 4: Delay 4 changeover
- Design sequence No.
- Integrated type
- Time delay Relay

3. Technical data

Type	JSZ6-2	JSZ6-4
Operating mode	power on delay	power on delay
Contact number	Delay 2 changeover	Delay 4 changeover
Contact capacity	Ue/Ie: AC-15 220V/0.75A,380V/0.47A; DC-13 220V/0.27A; Ith:5A	
Delay range	(0.1-1)s, (0.5-5)s, (1-10)s, (2.5-30)s, (5-60)s, (15-180)s, (1-10)min, (2.5-30)min, (5-60)min,	
Operating voltage	AC50Hz/60Hz 36V, 110V, 127V, AC220V, DC24V	
Electrical life	1×10^5	
Mechanical life	1×10^6	
Set mode	Potentiometer	
Repeat precision	≤10%	
Ambient temperature	-5℃~+40℃	
Interchangeability	Can interchange with H3Y series for use	
Matched pedestal :	CZY08A-02、CZY08A-E、CZY08B-01、CZY14A、CZY14B、CZY14B-E	

4. Wiring diagram

JSZ6-2

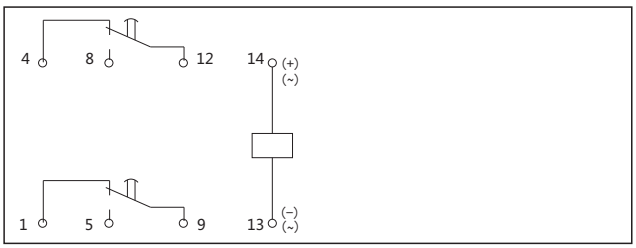

JSZ6-4

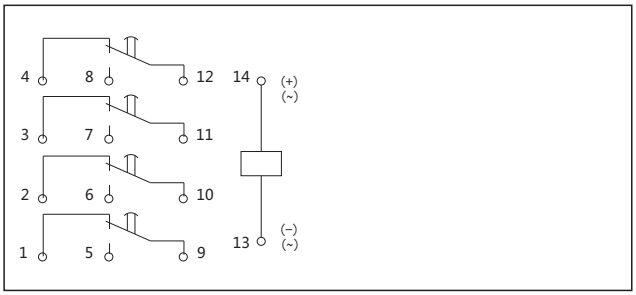

5. Overall and mounting dimensions (mm)

JSZ6 Profile and installation dimension

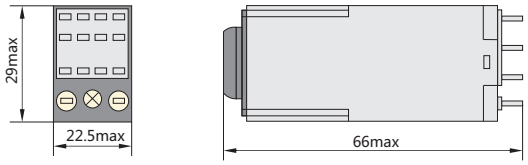

Opening size

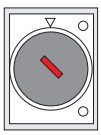

«Электро-Профи» - www.ep.ru



NKG3 Time Switch

1. General

NKG3 time switch (hereinafter referred to as time switch) is used in automatic control circuits with a frequency of AC 50Hz(or 60Hz), a rated control supply voltage of up to 220V and a rated operational current of 3A to provide timed on-off control for street lamps, advertising lamps and similar equipment.

2. Type designation

N K G 3 - □

- Other feature codes
  No: Basic type
  M: Enhanced type
- Design sequence No.
- Time switch
- Company code

CE

3. Technical data

Working voltage	85%~110% rated voltage AC50Hz AC220V
Working mode	Manual switch and automatic switch; switching time can be adjusted automatically by latitude Daylight saving time function (optional)
Programmable quantity	8-on 8-off
Time control range	1min~ 24h
Timing error	≤2s/day
Output mode	Group I conversion contact
Contact capacity	Ue/Ie:AC-15 220V/3A ; Ith: 16A
Electrical life	1×10^5
Mechanical life	3×10^5
Ambient temperature	-5℃~40℃
Power consumption	≤4.5VA
Installation method	Device type, guide rail type

Item	Severity level
Electrostatic discharge immunity	±8×(1±10%)kV (air discharge)
Radiated electromagnetic field immunity	Test electric field strength: 10×(1±10%)V/m
Fast transient immunity	For power line:2×(1±10%)kVduration:1min
Surge (impact) immunity	For power line:2×(1±10%)kV
RF conduction immunity	Open circuit test voltage: 10V,frequencyscope:150kHz~80MHz
Voltage sage immunity	Sag 30% in half a cycle,sag 60% in 5 cycles and 50 cycles,sag 100% in 250 cycles

G

«Электро-Профи» - www.ep.ru

4. Overall and mounting dimensions (mm)

4.1 Profile and installation dimension

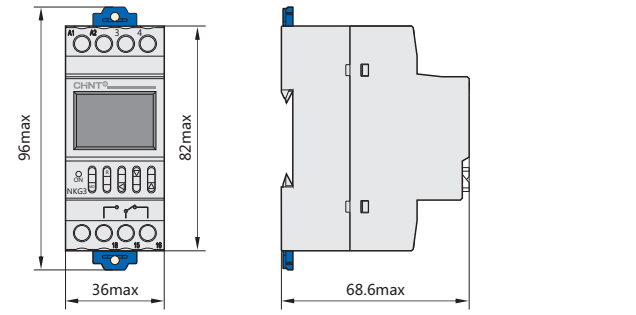

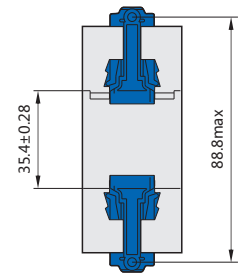

4.2 Connection mode

4.2.1 Direct control mode

If the electrical apparatus under control is single-phase supplied and has an operational current not greater than the rated value of the switch, direct control mode can be used, as shown in Figure 1. For lamp loads with a large starting impulse current, AC contactor expansion control mode should be used.

Figure 1 Connection diagram of single-phase direct control

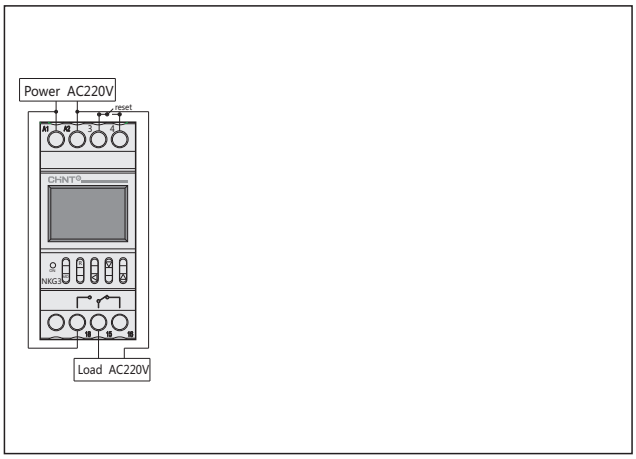

4.2.2 Single expansion mode

If the electrical apparatus under control is single-phase supplied and has an operational current greater than the rated value of the switch, AC contactor expansion control mode should be used, as shown in Figure 2.

Figure 2 Connection diagram of single-phase expansion control (contactor coil: 220V)

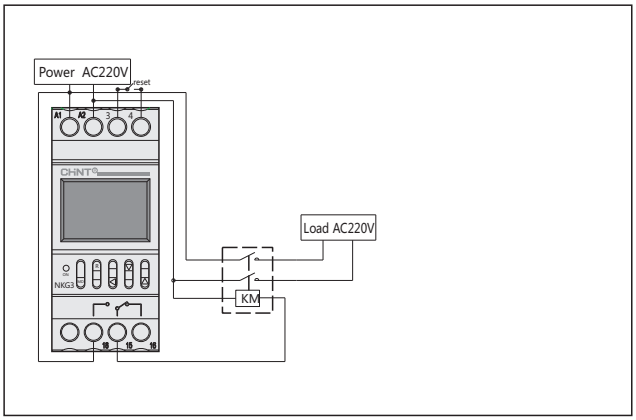

4.2.3 Three-phase operating mode

If the electrical apparatus under control is three-phase supplied, an external AC contactor is required.

a. If the coil voltage of the control contactor is AC220V 50Hz, the connection mode shown in Figure 4 should be used.

Figure 4 Connection diagram of three-phase control (contactor coil: 220V)

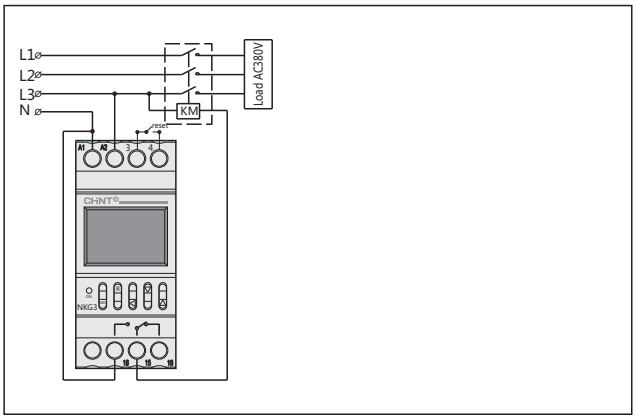

b. If the coil voltage of the control contactor is AC380V 50Hz, the connection mode shown in Figure 5 should be used.

Figure 5 Connection diagram of three-phase control (contactor coil: 380V)

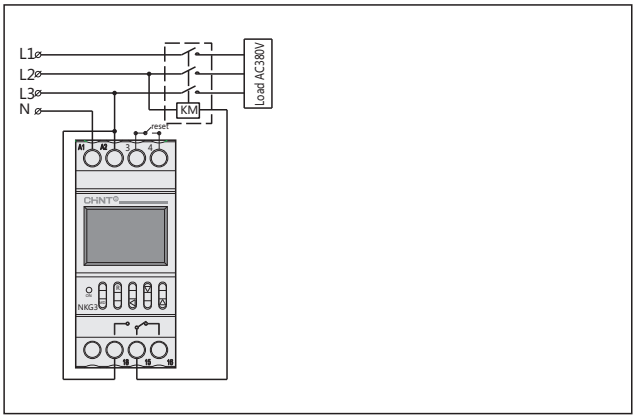

«Электро-Профи» - www.ep.ru



NKG3-M Time Switch

1. General

NKG3-M time switch (hereinafter referred to as time switch) is used in automatic control circuits with a frequency of AC 50Hz(or 60Hz), a rated control supply voltage of up to 220V and a rated operational current of 0.75A to provide timed on-off control for street lamps, advertising lamps and similar equipment.

2. Type designation

N K G 3 - □

- Other feature codes
  No: Basic type
  M: Enhanced type
- Design sequence No.
- Time switch
- Company code

3. Technical data

Rated control supply voltage	AC(50Hz) 220V
Conventional heating current	5A
Usage category of auxiliary circuit	AC-15
Rated operational current (Ie)	AC-15 220V/0.75A 380V/0.47A
Timing error	≤2 seconds/day
Time control range	1s~168h
Mechanical life	≥30 thousand times
Electrical life	≥10 thousand times
Mounting type	Installation type, rail type
Immunity	See Table 2

Item	Severity level
Electrostatic discharge immunity	±8×(1±10%)kV (air discharge)
Radiated electromagnetic field immunity	Test electric field strength: 10×(1±10%)V/m
Fast transient immunity	For power line, 2kV, for I/O signal and control circuits, 1kV, duration: 1min
Surge (impact) immunity	Open circuit test voltage: 2×(1±10%)kV

G

CE

«Электро-Профи» - www.ep.ru

4. Overall and mounting dimensions (mm)

4.1 Profile and installation dimension

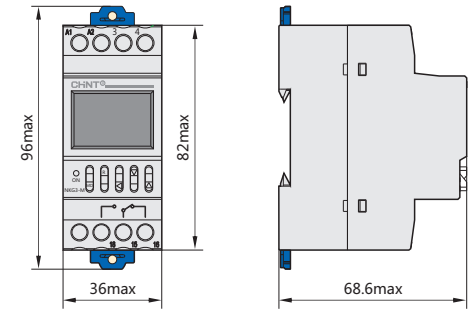

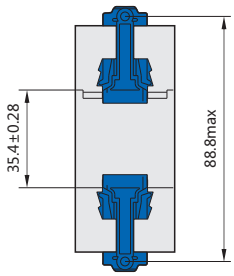

4.2 Connection mode

4.2.1 Direct control mode

If the electrical apparatus under control is single-phase supplied and has an operational current not greater than the rated value of the switch, direct control mode can be used, as shown in Figure 1. For lamp loads with a large starting impulse current, AC contactor expansion control mode should be used.

Figure 1 Connection diagram of single-phase direct control

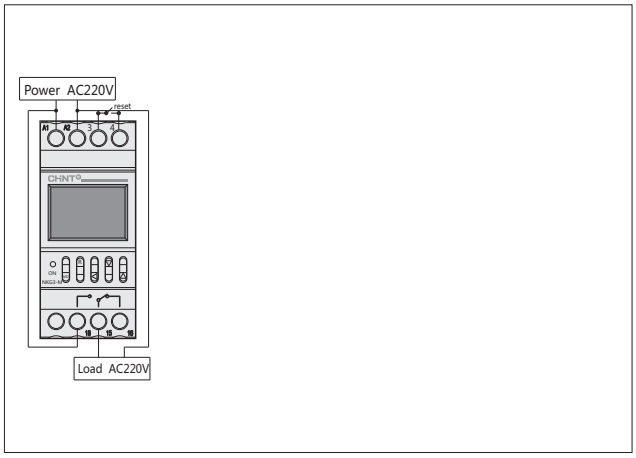

4.2.2 Single expansion mode

If the electrical apparatus under control is single-phase supplied and has an operational current greater than the rated value of the switch, AC contactor expansion control mode should be used, as shown in Figure 2.

Figure 2 Connection diagram of single-phase expansion control (contactor coil: 220V)

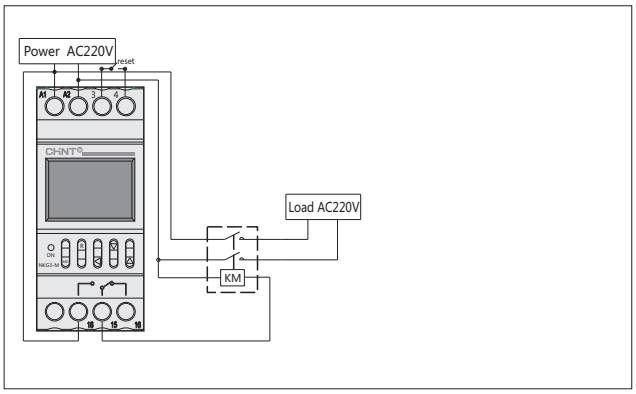

4.2.3 Three-phase operating mode

If the electrical apparatus under control is three-phase supplied, an external AC contactor is required.

a. If the coil voltage of the control contactor is AC220V 50Hz, the connection mode shown in Figure 4 should be used.

Figure 4 Connection diagram of three-phase control (contactor coil: 220V)

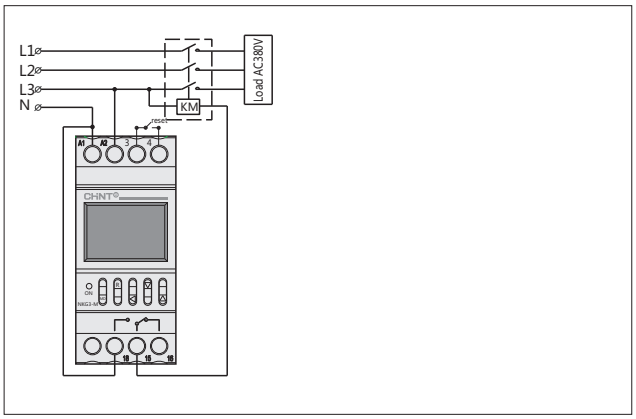

b. If the coil voltage of the control contactor is AC380V 50Hz, the connection mode shown in Figure 5 should be used.

Figure 5 Connection diagram of three-phase control (contactor coil: 380V)

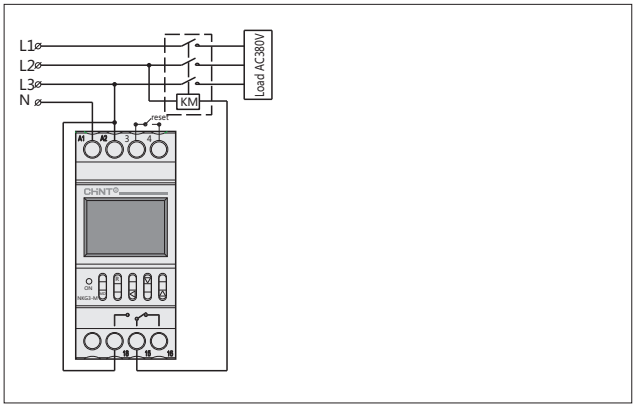

«Электро-Профи» - www.ep.ru



NKG1 Time Switch

1. General

NKG1 Time Switch is control element with time as control unit and can automatically turn on or turn off power supply of various consumer equipments according to preset time by user. The controlled objects are circuit equipments and household appliances such as street lamps, neon lamps, advertising lamps, manufacturing equipments, broadcast & television equipments, etc., which requires turning on and off at definite time.

2. Technical data

Operating mode	Time automatic control
Rated operating current	AC-15 3A
Rated operating voltage	AC220V 50Hz/60Hz
Electrical life	≥10,000
Mechanical life	≥30,000
Times of ON/OFF	16 opens & 16 closes
Battery	AA size battery (replaceable)
Timing error	≤2s/day
Ambient temperature	-5℃~+40℃
Installation mode	Guide rail type, wall-mounted type, unit style
External dimension	117.57×72.43×45.32

3. Wiring diagram

3.1 Wiring for direct control mode: direct control mode can be used for electrical apparatus which is single-phase power supply and its power consumption doesn't exceed rated value of this switch. See Figure 1 for wiring method;

3.2 Wiring for single-phase dilatancy mode: it is required a AC contactor with larger capacity than electrical apparatus power consumption for dilatancy when the controlled electrical apparatus is single-phase power supply, whereas its power consumption exceeds rated value of this switch. See Figure 2 for wiring method;

3.3 Wiring for three-phase operation mode: if the controlled electrical apparatus is three-phase power supply, it is required to externally connect three-phase AC contactor.
a. See Figure 3 for wiring, control contactor @ AC220V coil voltage, 50Hz;
b. See Figure 4 for wiring, control contactor @ AC380V coil voltage, 50Hz

Figure 1

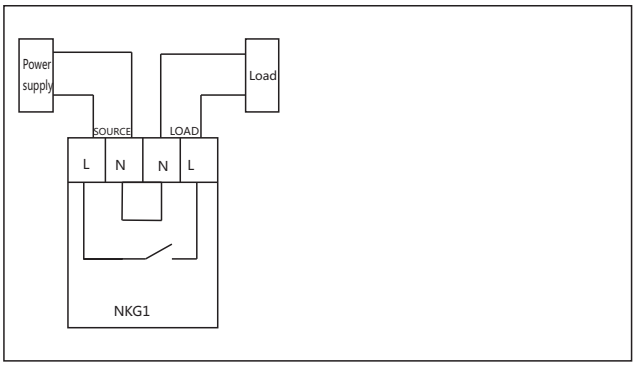

Figure 2

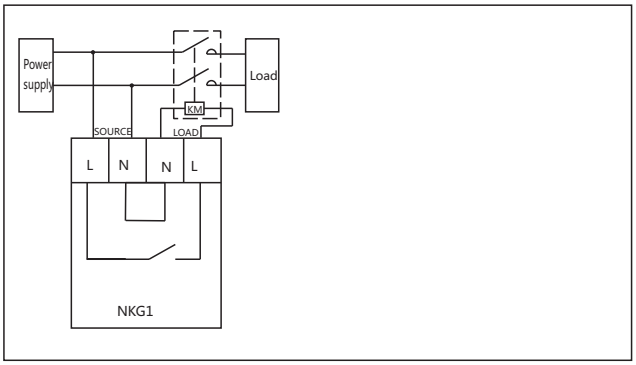

G

CE

«Электро-Профи» - www.ep.ru

Figure 3

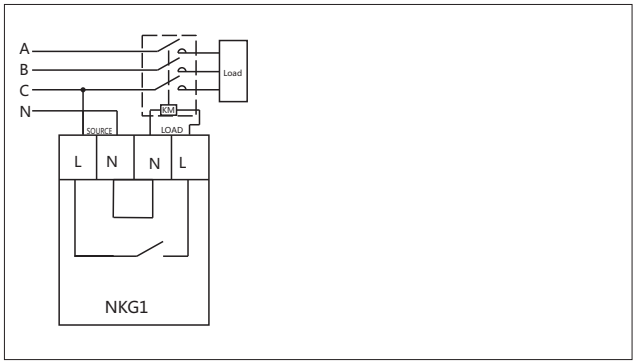

Figure 4

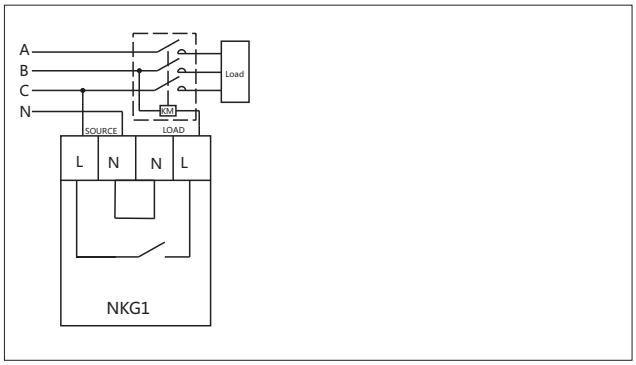

4. Overall and mounting dimensions (mm)

Profile installation dimensions

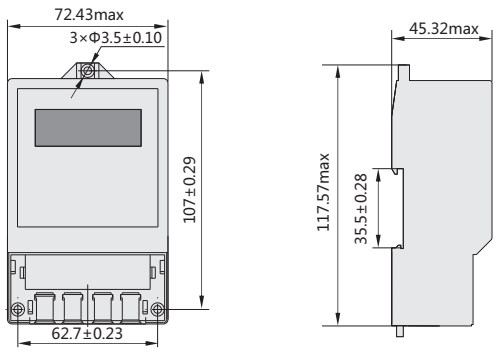

«Электро-Профи» - www.ep.ru



KG10D Time Switch

1. General

KG10D Time Switch can automatically turn on or turn off power supply of various consumer equipments according to preset time by user. The controlled objects are circuit equipments and household appliances such as street lamps, neon lamps, advertising lamps, manufacturing equipments, broadcast & television equipments, etc., which requires turning on and off at definite time.

2. Technical data

Operating mode	Time automatic control
Rated operating voltage	AC220V 50Hz/60Hz
Applicable voltage range	(85%~110%)Ue
Rated operating current	AC-15 220V 3A
Contact number	One group changeover or 1 NO
Electrical life	1×10^5
Mechanical life	1×10^6
Battery	Built in lithium battery
Time control range	1 min~168h
Timing error	≤2s/day
Times of ON/OFF	16 opens & 16 closes
Consumed power	<4VA
Relative humidity	≤95%
Ambient temperature	-5℃~+40℃
Installation mode	Guide rail type
External dimension	102.3×51.5×73.5

3. Wiring diagram

3.1 KG10D-1H is 1 NO and see Figure 4 for wiring method;

3.2 KG10D-1Z is 1 NO/ 1 NC and see Figure 3 for wiring method;

3.3 Wiring for single-phase direct control mode: direct control mode can be used for electrical apparatus which is single-phase power supply and its power consumption doesn't exceed rated value of this switch. See Figure 1 for wiring method;

3.4 Wiring for three-phase operation mode: if the controlled electrical apparatus is three-phase power supply, it is required to externally connect three-phase AC contactor. See Figure 2 for wiring method for control contactor @ AC220V coil voltage, 50Hz.

Figure 1 single-phase load

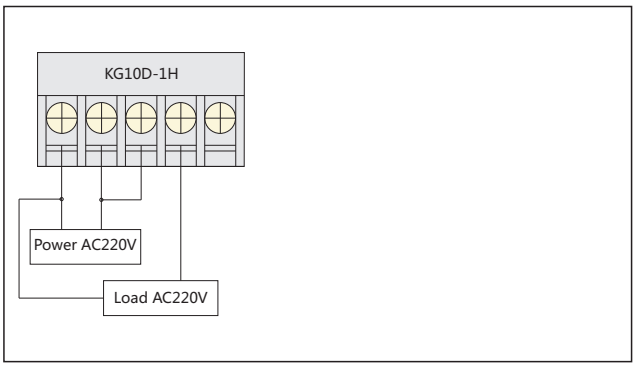

Figure 2 three-phase load

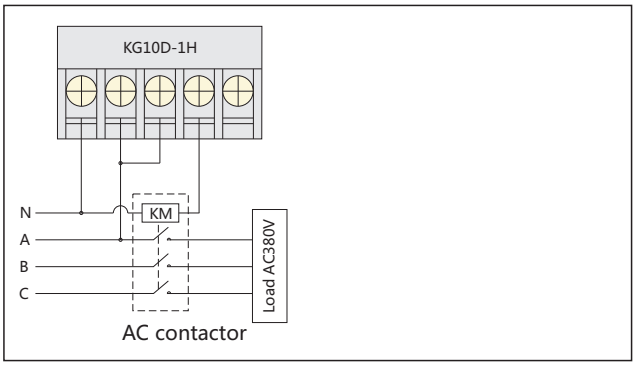

G

«Электро-Профи» - www.ep.ru

Figure 3 KG10D-1Z

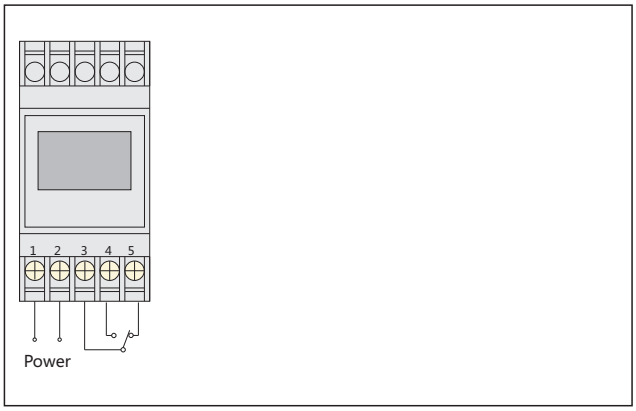

Figure 4 KG10D-1H

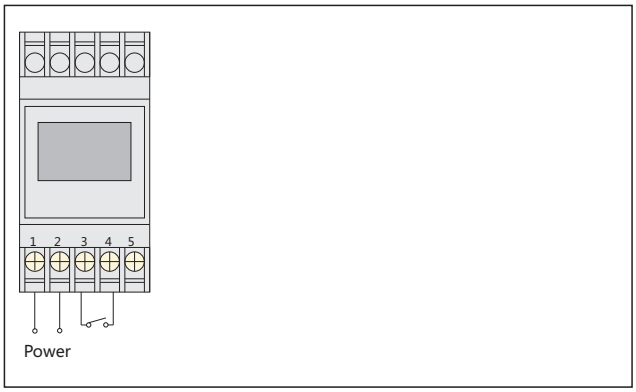

4. Overall and mounting dimensions (mm)

Profile installation dimensions

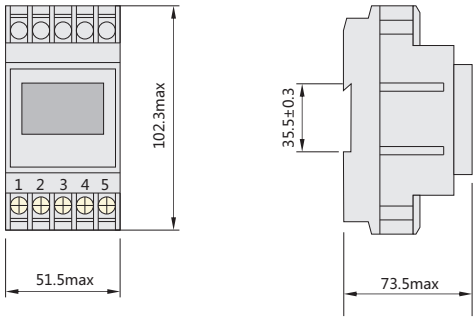

«Электро-Профи» - www.ep.ru



KG10M Time Switch

1. General

KG10M Time Switch can automatically turn on or turn off power supply of various consumer equipments according to preset time by user. The controlled objects are circuit equipments and household appliances such as street lamps, neon lamps, advertising lamps, manufacturing equipments, broadcast & television devices etc. Which requires turning on and off at definite time.

2. Technical data

Operating mode	Time automatic control
Rated operating voltage	AC220V 50Hz/60Hz
Applicable voltage range	(85%~110%)Ue
Rated operational current	AC-15 220V 3A
Contact number	1 NO
Times of ON/OFF	16-opens & 16-closes
Electrical life	1×10^5
Mechanical life	1×10^6
Battery	
Time-controlling range	1 min~168h
Timing error	≤2s/day
Consumed power	<4VA
Relative humidity	≤95%
Ambient temperature	-5℃~+40℃
Installation mode	Panel type
External dimension	59.5×51.5×122.5

3. Wiring diagram

Wiring diagram

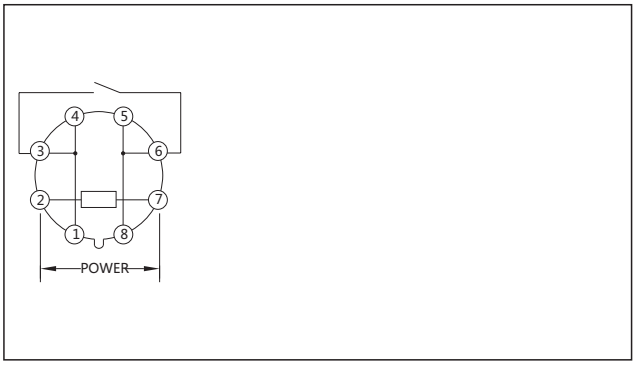

4. Overall and mounting dimensions (mm)

Profile installation dimensions

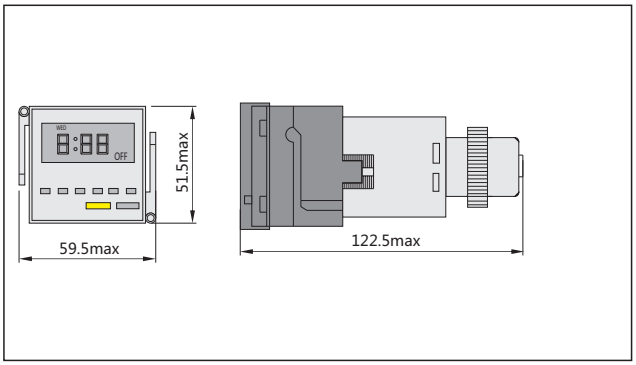

Opening size

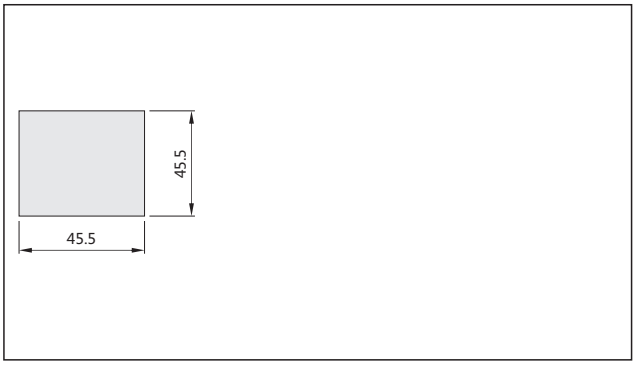

G

«Электро-Профи» - www.ep.ru



KG316T Time Switch

1. General

KG316T Time Switch can automatically turn on or turn off power supply of various consumer equipments according to preset time by user. The controlled objects are circuit equipments and household appliances such as street lamps, neon lamps, advertising lamps, manufacturing equipments, broadcast & television equipments, etc., which requires turning on and off at definite time.

2. Technical data

Operating mode	Time automatic control
Rated operating current	AC-15 3A
Rated operating voltage	AC220V 50Hz/60Hz
Applicable voltage range	(85%~110%)Ue
Rated output voltage	AC220V×(1±1%)
Electrical life	≥10,000
Mechanical life	≥30,000
Times of ON/OFF	8 opens & 8 closes, 16 opens & 16 closes
External dimension	121.32×74.73×50.77

3. Function features

3.1 "AAA" size battery, replaceable;

3.2 Max set times per day (8 opens & 8 closes, 16 opens & 16 closes) and select according to requirements;

3.3 On-off time may cycle according to day or week;

3.4 Equipped with keyboard locking function for error operation protection;

3.5 Adopt single key operation in all, easy to install and adjust;

3.6 Timing error ≤2s/day.

4. Wiring diagram

4.1 Wiring for direct control mode: direct control mode can be used for electrical apparatus which is single-phase power supply and its power consumption doesn't exceed rated value of this switch. See Figure 1 for wiring method;

4.2 Wiring for single-phase dilatancy mode: it is required a AC contactor with larger capacity than electrical apparatus power consumption for dilatancy when the controlled electrical apparatus is single-phase power supply, whereas its power consumption exceeds rated value of this switch. See Figure 2 for wiring method;

4.3 Wiring for three-phase operation mode: if the controlled electrical apparatus is three-phase power supply, it is required to externally connect three-phase AC contactor;
a. See Figure 3 for wiring, control contactor @ AC220V coil voltage, 50Hz;
b. See Figure 4 for wiring, control contactor @ AC380V coil voltage, 50Hz.

Figure 1

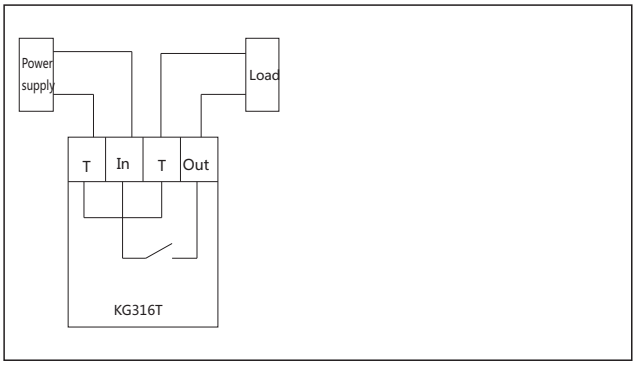

«Электро-Профи» - www.ep.ru

Figure 2

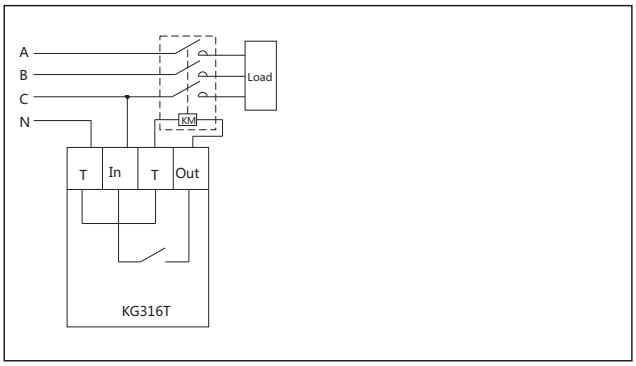

Figure 3

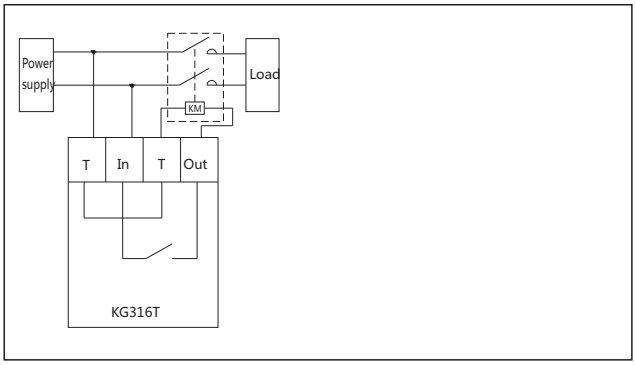

Figure 4

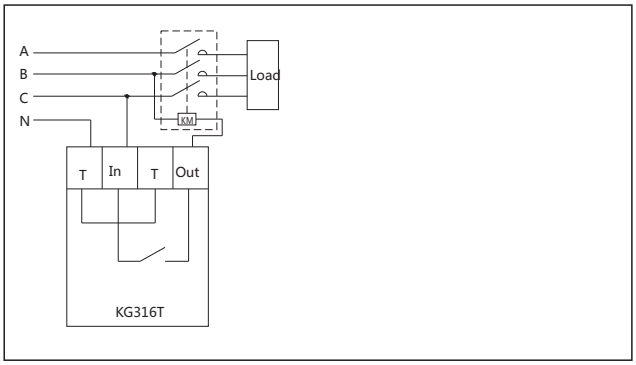

5. Overall and mounting dimensions (mm)

Profile installation dimensions

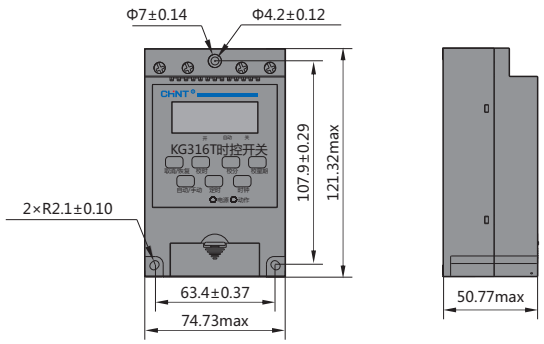

G

«Электро-Профи» - www.ep.ru



NJJ7-H Counting Relay

1. General

NJJ7-H counting relay is used to provide counting and counting control in control circuits with an AC frequency of 50Hz/60Hz and a rated control voltage of up to 240V and control circuits with a DC rated control supply voltage of up to 240V.

2. Type designation

N JJ 7 -H/□

- Rated control supply voltage
- Feature Code :
  H : improved Type
- Design sequence No.
- Counting
- Company code

Note: Some models of this product apply to a wide range of operational voltage. For example, an operational voltage of AC/DC100V～240V means that it can operate normally within the voltage range of AC or DC 100V to 240V.

3. Technical data

Operational voltage	85%-110% of rated voltage AC 50Hz/60Hz AC/DC100V-240V, DC24V
Electrical life	1×10^5
Mechanical life	1×10^6
Output mode	1 group of change-over contacts
Contact capacity	Ue/Ie: AC-15 220V/0.75A, 380V/0.47A; DC-13 220V/0.27A; Ith:5A
Counting digits	6-digit counting relay (the upper 6-digit LCD is the count value, the lower 6-digit LCD is the preset value)
Counting rate	1 time/second, 30 times/second, 1000 times/second (can be set)
Counting mode	Addition, subtraction, reversible A, reversible B, reversible C
Input signal	Contact input, sensor input (NPN type/PNP type can be set)
Value setting	Can be set within the range 0.001~99.999
Output mode	N, F, C, R, K, P, Q, A
Output time	The output time can be set within 0.01s~9.99s (under output mode C, R, K, P ,Q or A)
Ambient temperature	-5℃~+40℃
Power consumption	3VA
Mounting type	Panel type
Overall dimensions	W58×H48×L97mm
Opening size	W45.5×H45.5mm
Power-off memory	More than 10 years (can be set)

4. Wiring diagram

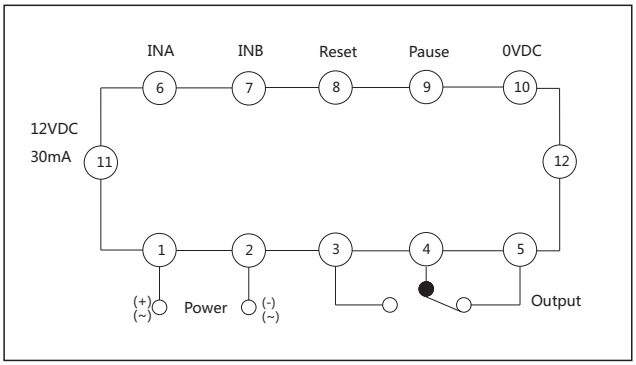

«Электро-Профи» - www.ep.ru

5. Overall and mounting dimensions (mm)

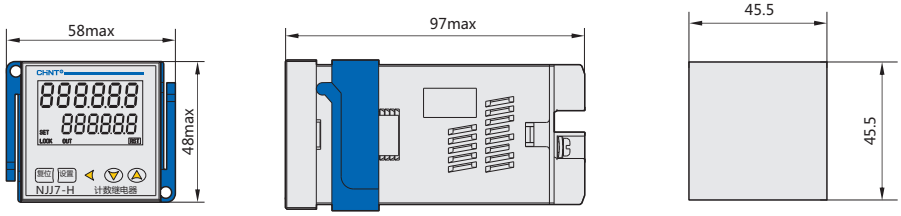

6. Sequence diagram of counting mode

Counting mode	Timing-sequence diagram	Remark
V Addition counting mode	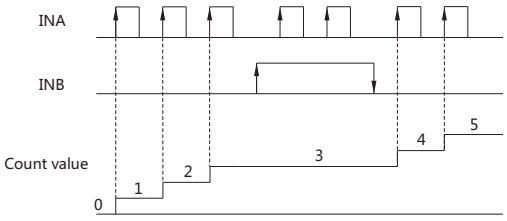	Count at INA rising edge, stop counting at INB input.
	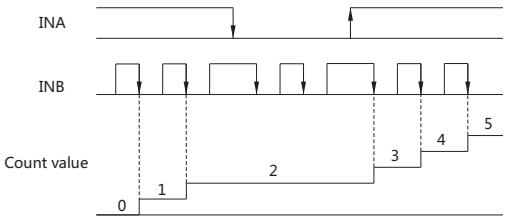	Count at INB input falling edge at INA input.
D Subtraction counting mode	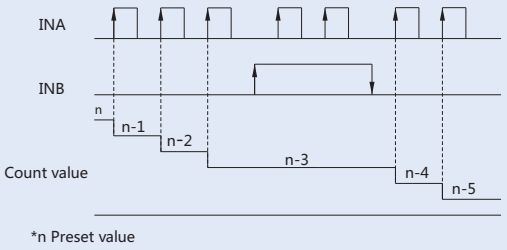	Count at INA rising edge, stop counting at INB input.
	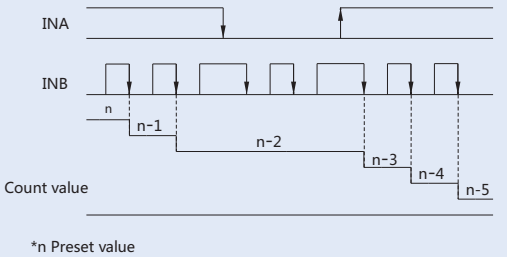	Count at INB input falling edge at INA input.
UD-A Reversible counting mode A	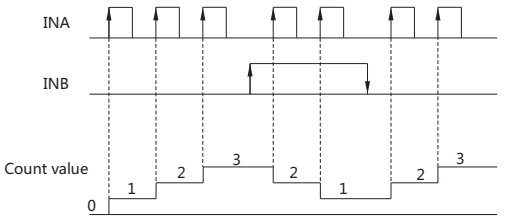	Reversible counting mode A: Addition counting at INA input, subtraction counting when INB input is active.

G

«Электро-Профи» - www.ep.ru

Counting mode	Timing-sequence diagram	Remark
UD-B Reversible counting mode B	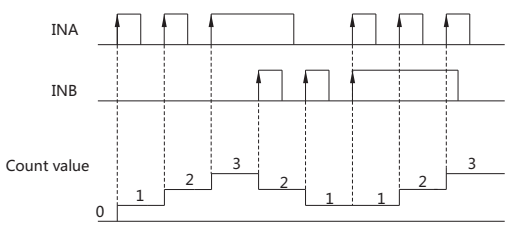	Reversible counting mode B: Addition counting at INA input, subtraction counting at INB input.
UD-C Reversible counting mode C	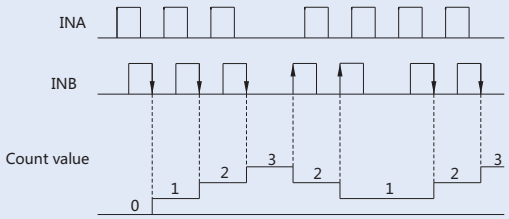	Reversible counting mode C: Automatic recognition of positive and reverse rotations, addition and subtraction counting.

7. Sequence diagram of output mode

Output mode	Plus counting mode	Minus counting mode	Inverse counting mode A, B, C
(N)	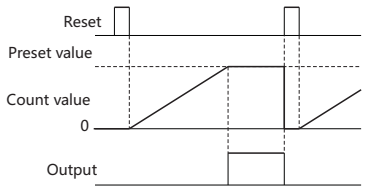	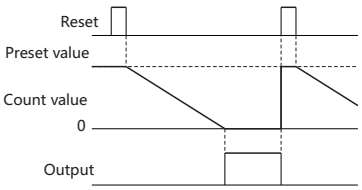	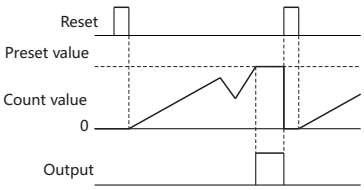
(F)	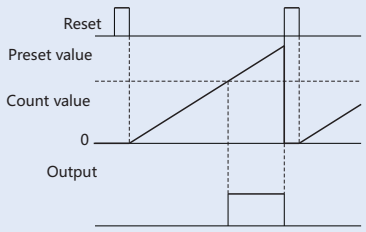	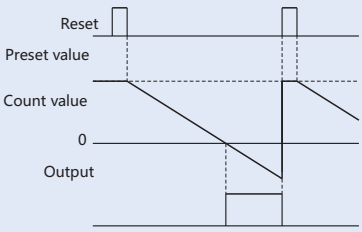	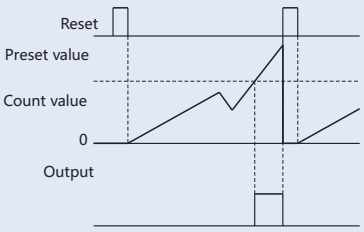
(C)	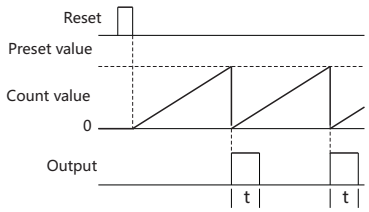	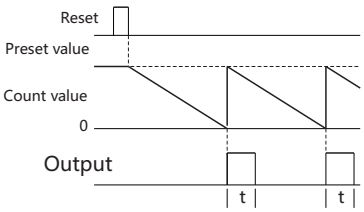	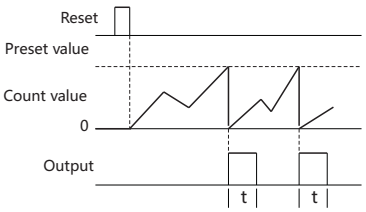
(R)	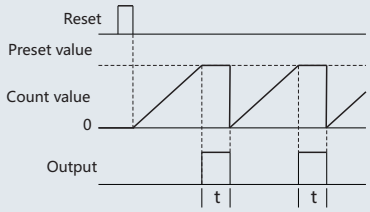	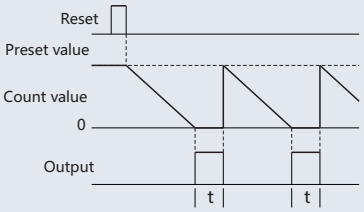	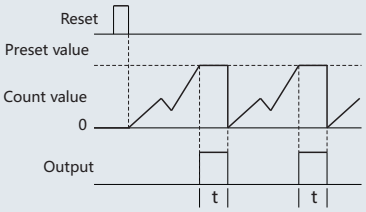

«Электро-Профи» - www.ep.ru

Output mode	Plus counting mode	Minus counting mode	Inverse counting mode A, B, C
K(K)	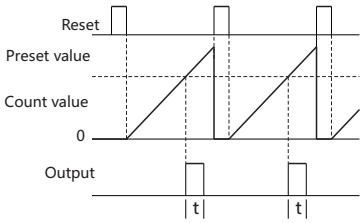	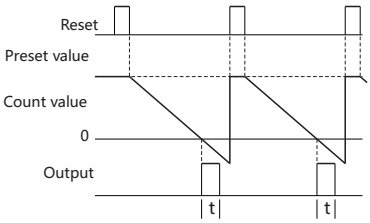	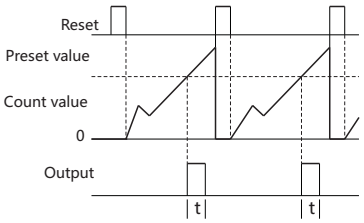
P(P)	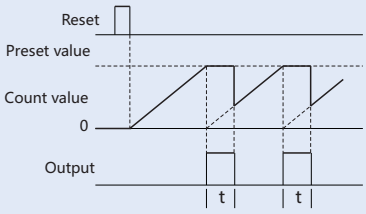	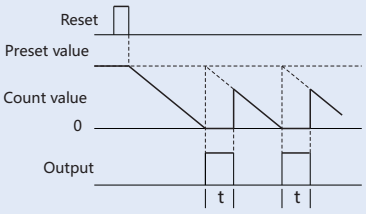	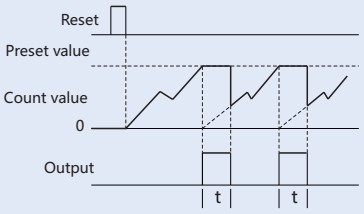
Q(Q)	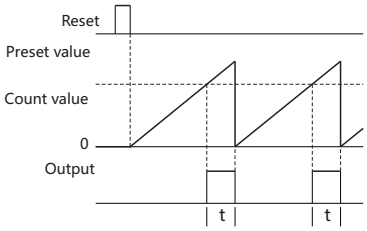	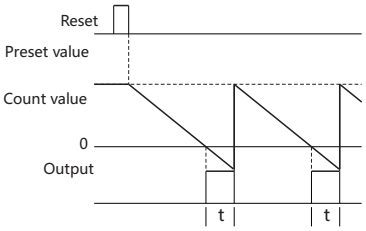	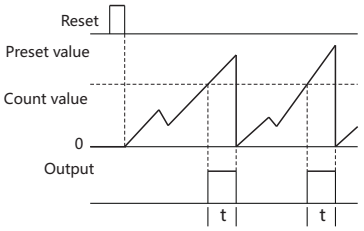
A(A)	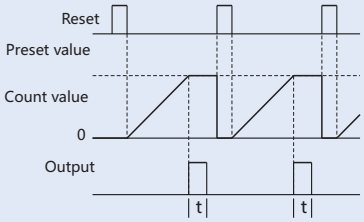	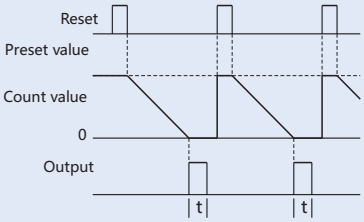	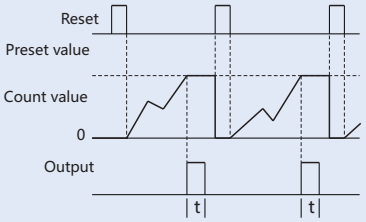

Note: It is the output time, which can be set by the user.

G

«Электро-Профи» - www.ep.ru



NJJ5-J Electronic Counter

1. General

This product adopts microminiature design and is applicable for counting in various circuits.

2. Type designation

N JJ 5 - J □□/□

- Rated operational voltage
- Blank: normal ; E: with extended panel
- L: low-speed type 10 times/s
  H: high-speed type 1000 times/s
- J: counter
- Design S.N.
- Counting relay
- Enterprise symbol

Note: This product is applicable for wide range operating voltage,for instance, operating voltage within AC/DC100V~240V means it can operate normally within the voltage range of AC/DC 100V to 240V.

3. Technical data

Operating voltage	85%-110% of rated voltage AC50Hz/60Hz AC/DC100V-240V, DC24V
Counting range	0~999999
Counting speed	10 times/s or 1000 times/s
Counting mode	Addition counting mode
Input signal	Contact input, sensor input (NPN type)
Reset mode	Panel button reset, external terminal reset
Reset min pulse width	20ms
Counting error	≤±1 time
Current failure memory	>10 years
Power consumption	About 1.5VA
Installation mode	Panel type
Ambient temperature	-5℃~+40℃

4. Wiring diagram

NJJ5-J contact signal input

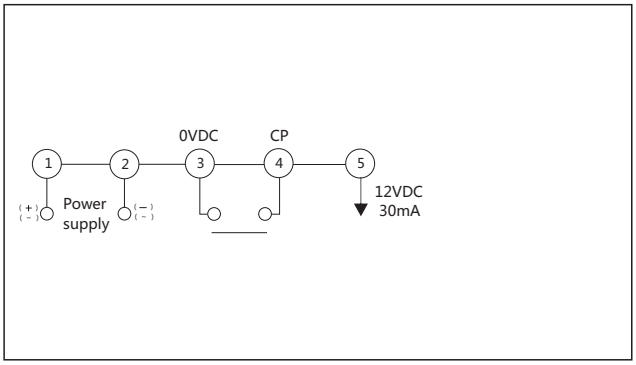

NJJ5-J sensor signal input

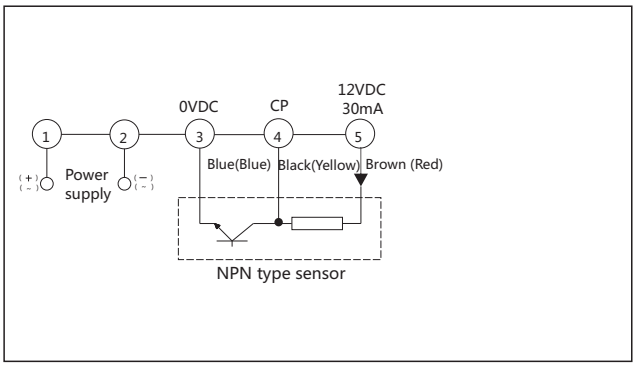

«Электро-Профи» - www.ep.ru

5. Overall and mounting dimensions (mm)

Profile and installation dimension

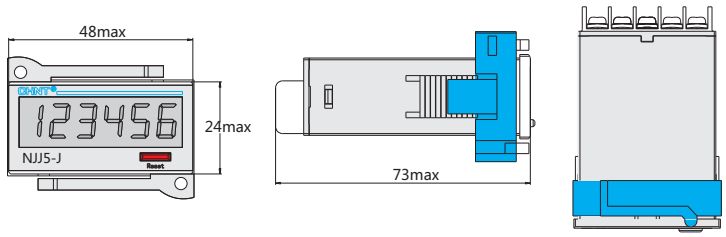

Opening size

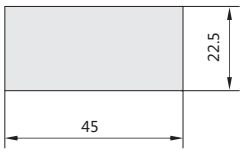

6. Extended panel type

Profile and installation dimension of extended panel type

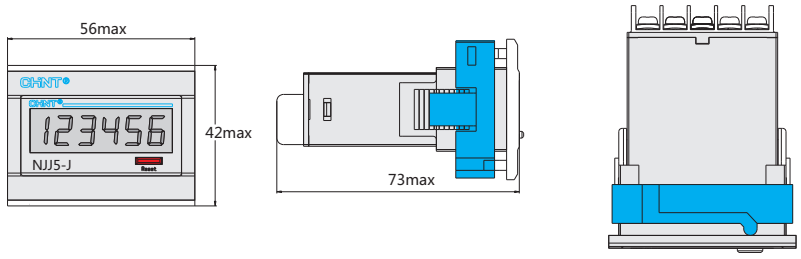

Opening size of extended panel type

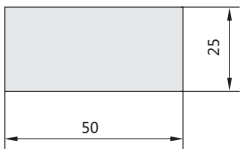

7. Operating timing-sequence diagram

NJJ5-J operating timing-sequence diagram

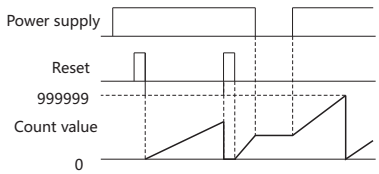

G

«Электро-Профи» - www.ep.ru



NJJ5-L Electronic Timer

1. General

This product adopts microminiature design and is applicable for accumulating time in various circuits.

2. Type designation

N JJ 5 - L □□/□

- Rated operational voltage
- Blank: normal ; E: with extended panel
- 1: 99999.9h
  2:99h59min59s
  3:9999h59min
  4:9999day23h
- L: time accumulator
- Design S.N.
- Counting relay
- Enterprise symbol

Note: This product is applicable for wide range operating voltage, for instance, operating voltage within AC/DC100V~240V means it can operate normally within the voltage range of AC/DC 100V to 240V.

3. Technical data

Operating voltage	85%-110% of rated voltage AC50Hz/60Hz AC/DC100V-240V, DC24V
Accumulating time range	99999.9h, 99h59min59s, 9999h59min, 9999day23h
Resetting mode	Panel button resetting, external terminal resetting
Input signal	Contact input, sensor input (NPN type)
Resetting min pulse width	20ms
Accumulative error	≤0.02%
Current failure memory	> 10 years
Power consumption	1.5VA approx.
Installation mode	Panel type
Ambient temperature	-5℃~+40℃

4. Wiring diagram

NJJ5-L contact signal input

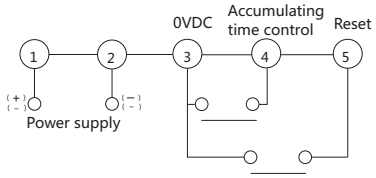

Note: If is required to accumulate time as making, please short connect 3 and 4.

NJJ5-L sensor signal input

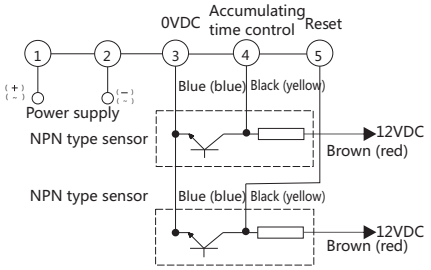

«Электро-Профи» - www.ep.ru

5. Overall and mounting dimensions (mm)

Profile and installation dimension

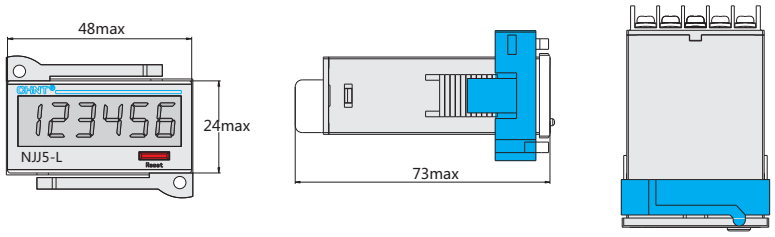

Opening size

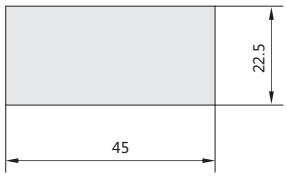

6. Extended panel type

Profile and installation dimension of extended panel type

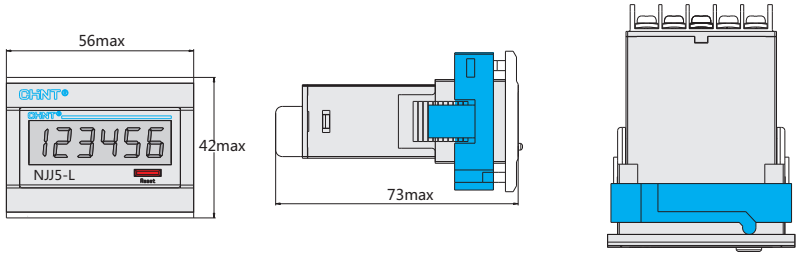

Opening size of extended panel type

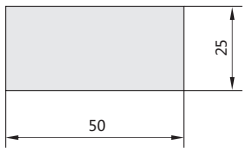

7. Operating timing-sequence diagram

NJJ5-L operating timing-sequence diagram

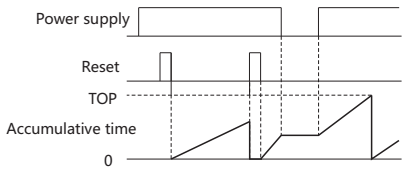

G

«Электро-Профи» - www.ep.ru



2. Type designation

N JJ 3 / □

- □ — Rated voltage of control power
- 3 — Design sequence No.
- JJ — Counting relay
- N — Enterprise symbol

Note: This product is applicable for wide range of operating voltage, for instance, operating voltage within AC/DC100V~240V means it can operate normally within the voltage range of AC/DC 100V to 240V.

NJJ3 Counting Relay

1. General

NJJ3 Counting Relay is applicable for controlling circuit @ A.C. 50Hz/60Hz, 240V rated voltage of control power supply and D.C. 240V rated voltage of control power supply as counting or counting control element.

3. Technical data

Operating mode	85%-110% of rated voltage AC50Hz/60Hz AC/DC100V-240V
Electrical life	1×10^5
Mechanical life	1×10^6
Output mode	1group changeover contact, open-collector output (30VDC 100mA Max), batch process output
Contact capacity	Ue/Ie:AC-15 220V/0.75A,380V/0.47A; DC-13 220V/0.27A; Ith:5A
Number of counting digits	6-digit counting relay (6-digit red LED is count value, 6-digit green LED is preset value)
Counting speed	1 time/s, 30 times/s, 1000times/s are provided for selection
Counting mode	Plus, minus, plus minus inverse A, plus minus inverse B, plus minus inverse C
Batch process	Settable range 0~999999
Input signal	Contact input, sensor input (NPN type/ PNP type are provided for selection)
Magnitude setting	With magnitude setting, range 0.001~99.999
Output mode	N, F, C, R, K, P, Q, A
Output time	Settable output time 0.01s~9.99s (when output mode is C, R, K, P, Q, A)
Ambient temperature	-5℃~+40℃
Power consumption	3W
Installation mode	Panel type
External dimension	W88×H72×L97 mm
Opening size	W69×H69 mm
Current failure memory	>10 years(can be set)

«Электро-Профи» - www.ep.ru

4. Wiring diagram

Count wiring diagram

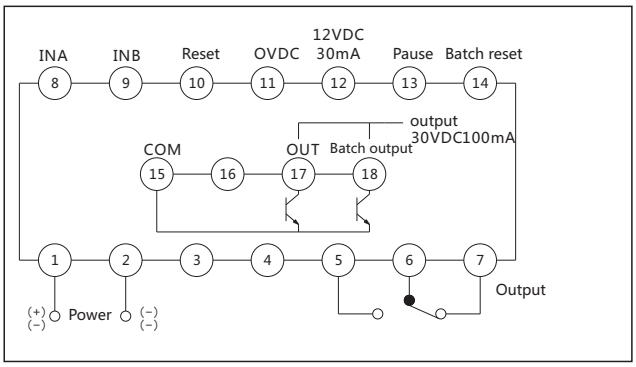

5. Overall and mounting dimensions (mm)

External dimension

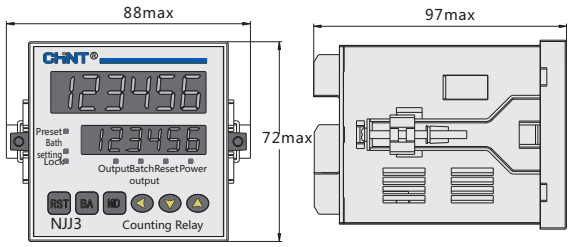

Opening size

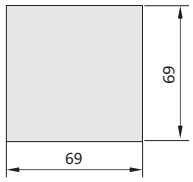

6. Sequence diagram of counting mode

Counting mode	Timing-sequence diagram	Remark
V Addition counting mode	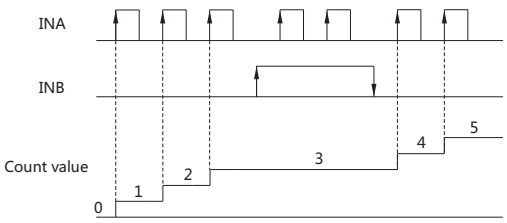	Count at INA rising edge, stop counting at INB input.
	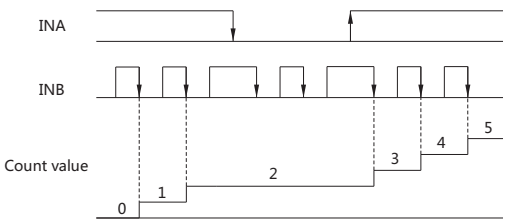	Count at INB input falling edge at INA input.

«Электро-Профи» - www.ep.ru

Counting mode	Timing-sequence diagram	Remark
D Subtraction counting mode	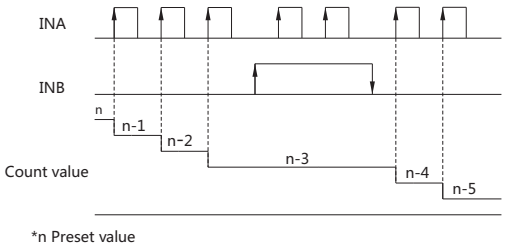	Count at INA rising edge, stop counting at INB input.
	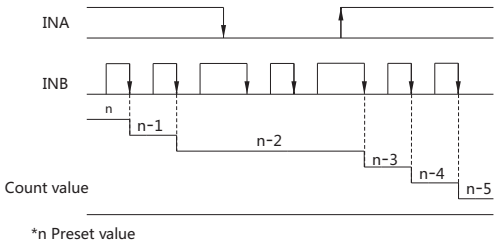	Count at INB input falling edge at INA input.
UD-A Reversible counting mode A	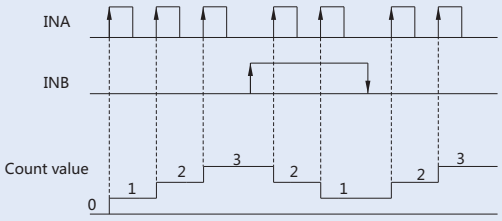	Reversible counting mode A: Addition counting at INA input, subtraction counting when INB input is active.
UD-B Reversible counting mode B	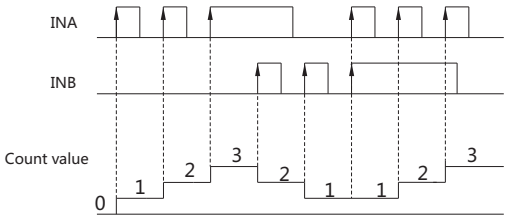	Reversible counting mode B: Addition counting at INA input, subtraction counting at INB input.
UD-C Reversible counting mode C	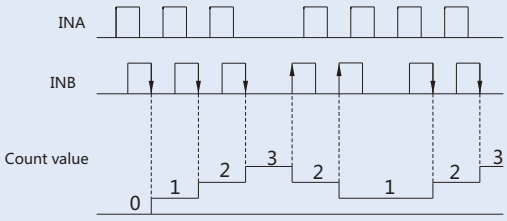	Reversible counting mode C: Automatic recognition of positive and reverse rotations, addition and subtraction counting.

7. Sequence diagram of output mode

Output mode	U Plus counting mode	d Minus counting mode	Inverse counting mode A, B, C
⊓(N)	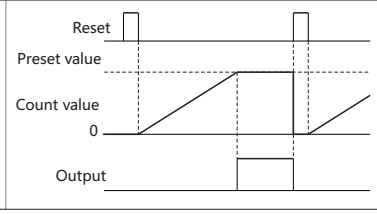	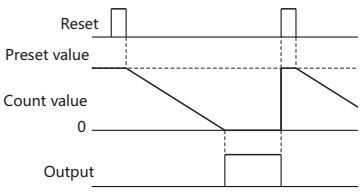	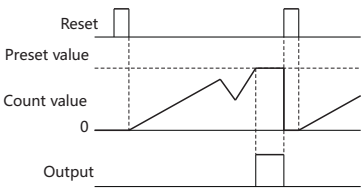

«Электро-Профи» - www.ep.ru

Output mode	Plus counting mode	Minus counting mode	Inverse counting mode A, B, C
F(F)	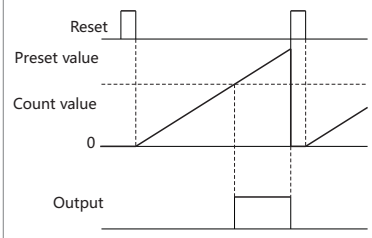	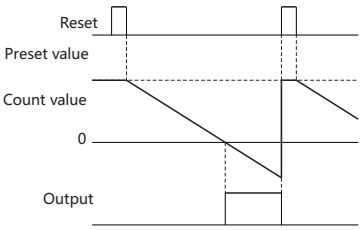	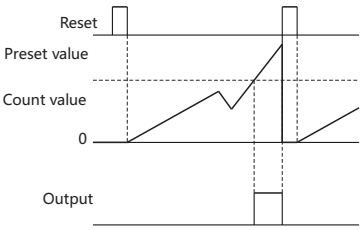
C(C)	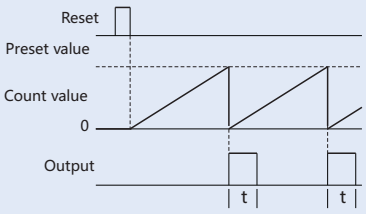	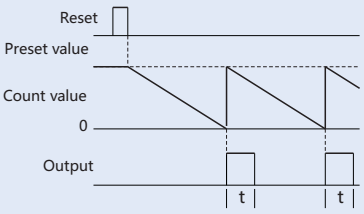	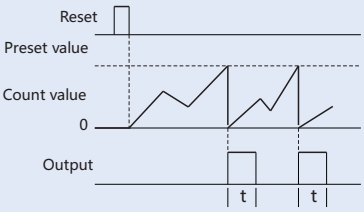
R(R)	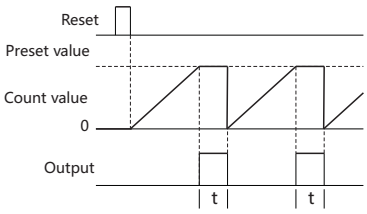	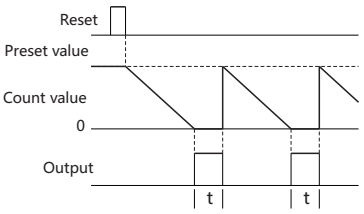	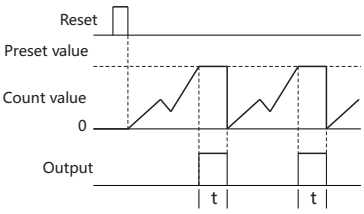
K(K)	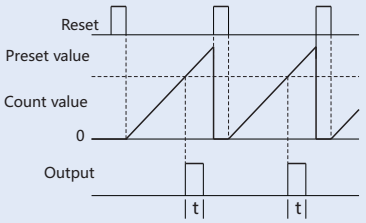	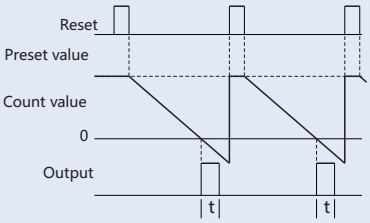	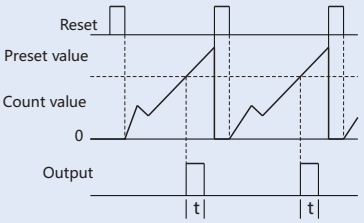
P(P)	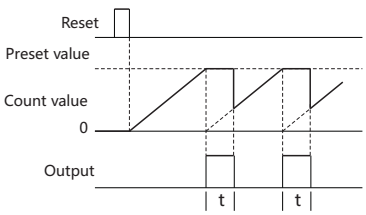	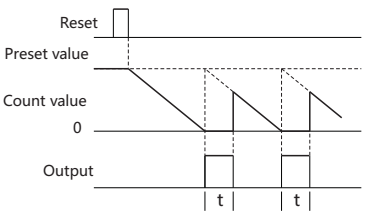	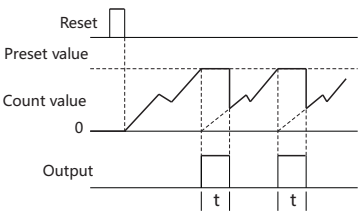
Q(Q)	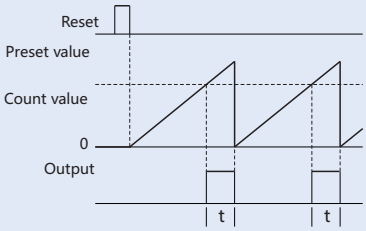	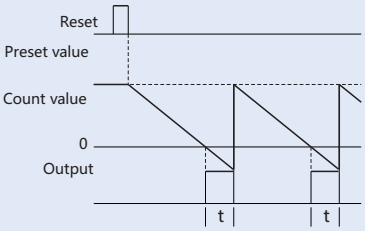	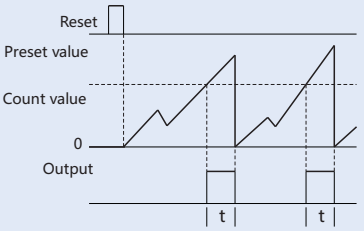
A(A)	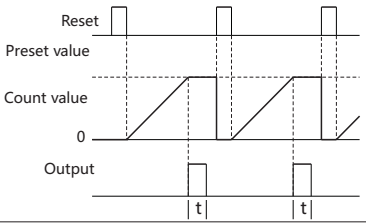	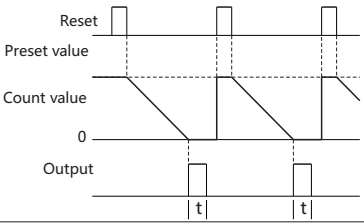	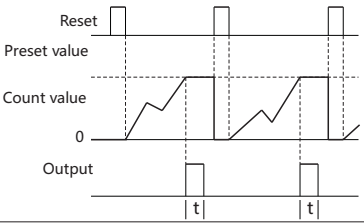

Note: It is the output time, which can be set by the user.

G

«Электро-Профи» - www.ep.ru



2. Type designation

N JJ 7-M/□

- Rated control supply voltage
- Feature Code : M : enhanced Type
- Design sequence No.
- Counting
- Company code

Note: This product is applicable for wide range of operating voltage, for instance, operating voltage within AC/DC100V~240V means it can operate normally within the voltage range of AC/DC 100V to 240V.

NJJ7-M Counting Relay

1. General

NJJ7-M Counting Relay is applicable for controlling circuit @ A.C. 50Hz/60Hz, 240V rated voltage of control power supply and D.C. 240V rated voltage of control power supply as counting or counting control element.

3. Technical data

Operating mode	85%-110% of rated voltage AC50Hz/60Hz AC/DC100V-240V, DC24V
Electrical life	1×10^5
Mechanical life	1×10^6
Output mode	1group changeover contact, open-collector output (30VDC 100mA Max)
Contact capacity	Ue/Ie: AC-15 220V/0.75A, 380V/0.47A; DC-13 220V/0.27A; Ith:5A
Number of counting digits	At CR mode: 4-digit counting relay (4-digit red LED is count value, 4 digit green LED is preset value)
	At CT mode: 8-digit reversible summation counter (green LED is low 4-digit, red is high 4-digit)
Counting speed	1 time/s, 30 times/s, 1000times/s are provided for selection
Counting mode	Plus, minus, plus minus inverse A, plus minus inverse B, plus minus inverse C
Input signal	Contact input, sensor input (NPN type/ PNP type are provided for selection)
Magnitude setting	With magnitude setting, range 0.01~9.99
Output mode	N, F, C, R, K, P, Q, A
Output time	Settable output time 0.01s~9.99s (when output mode is C, R, K, P, Q, A)
Ambient temperature	-5℃~+40℃
Power consumption	≤3W
Installation mode	Panel type
External dimension	W58×H48×L97 mm
Opening size	W45.5×H45.5 mm
Current failure memory	>10 years

«Электро-Профи» - www.ep.ru

4. Wiring diagram

Count wiring diagram

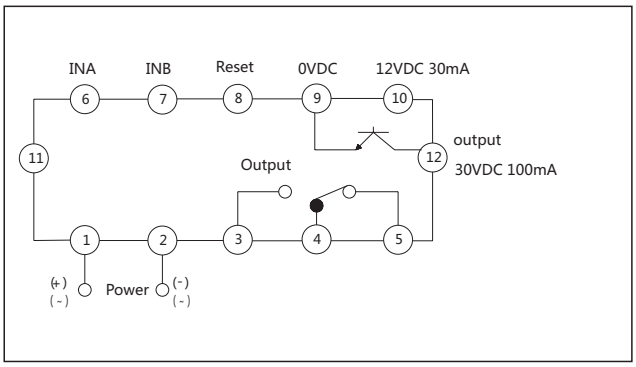

5. Overall and mounting dimensions (mm)

External dimension

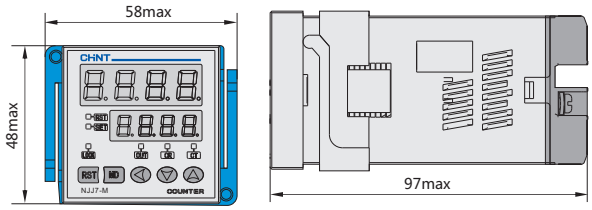

Opening size

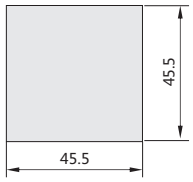

6. Sequence diagram of counting mode

Counting mode	Timing-sequence diagram	Remark
V Addition counting mode	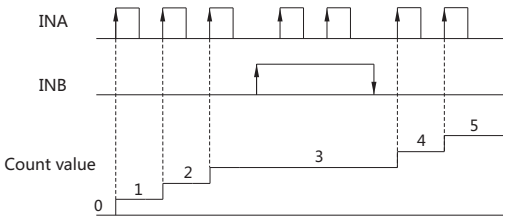	Count at INA rising edge, stop counting at INB input.
	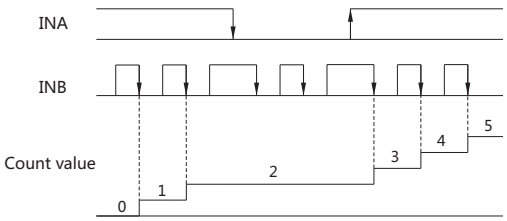	Count at INB input falling edge at INA input.

«Электро-Профи» - www.ep.ru

Counting mode	Timing-sequence diagram	Remark
D Subtraction counting mode	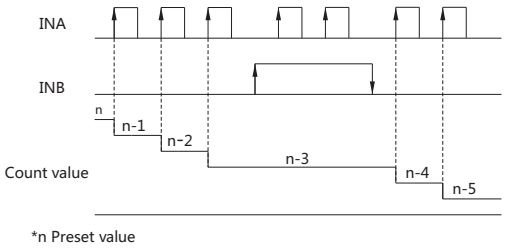	Count at INA rising edge, stop counting at INB input.
	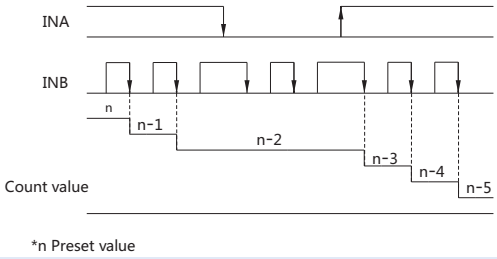	Count at INB input falling edge at INA input.
UD-A Reversible counting mode A	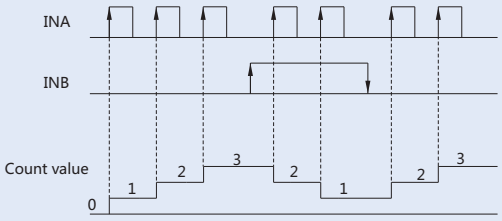	Reversible counting mode A: Addition counting at INA input, subtraction counting when INB input is active.
UD-B Reversible counting mode B	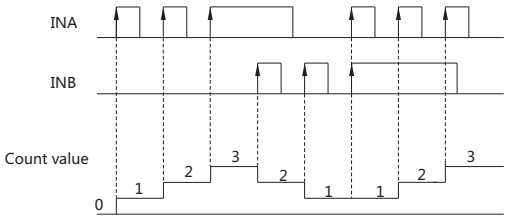	Reversible counting mode B: Addition counting at INA input, subtraction counting at INB input.
UD-C Reversible counting mode C	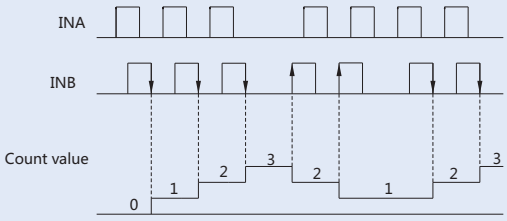	Reversible counting mode C: Automatic recognition of positive and reverse rotations, addition and subtraction counting.

7. Sequence diagram of output mode

Output mode	U Plus counting mode	d Minus counting mode	Inverse counting mode A, B, C
⊓I (N)	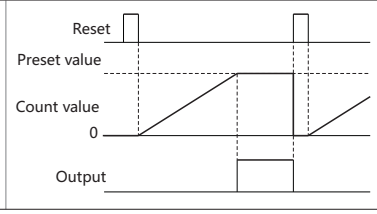	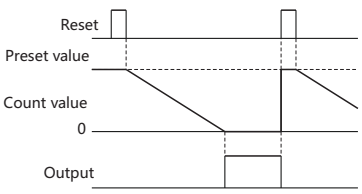	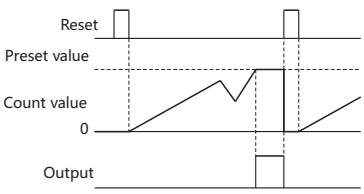

«Электро-Профи» - www.ep.ru

Output mode	Plus counting mode	Minus counting mode	Inverse counting mode A, B, C
F(F)	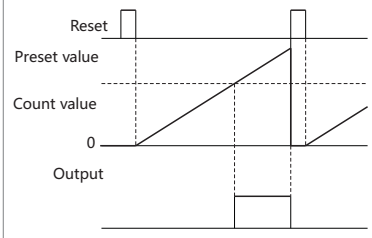	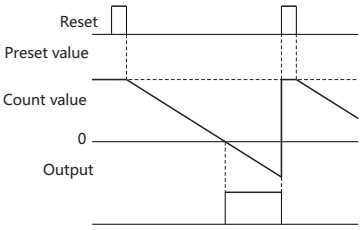	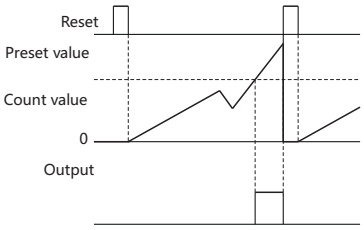
C(C)	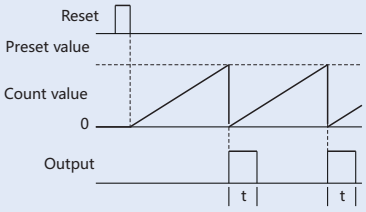	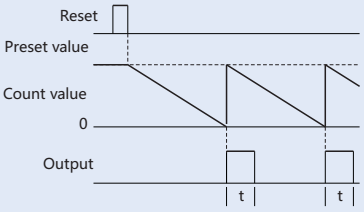	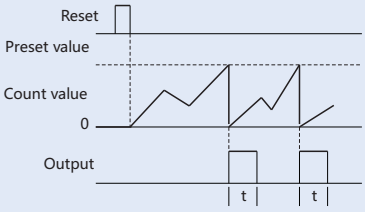
R(R)	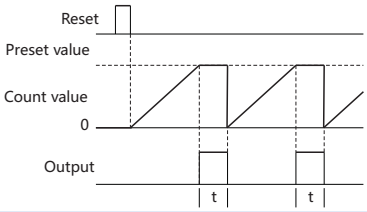	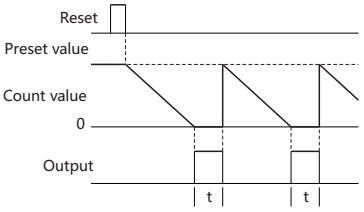	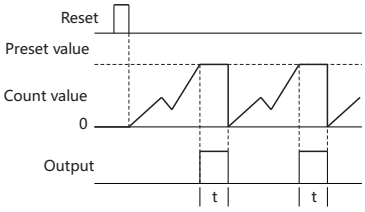
K(K)	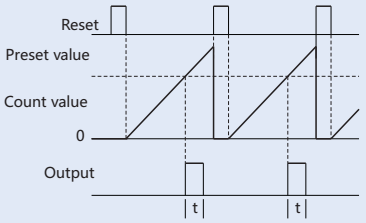	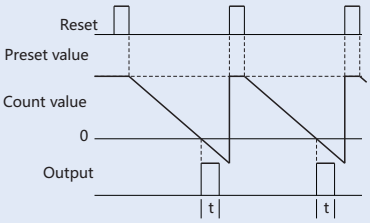	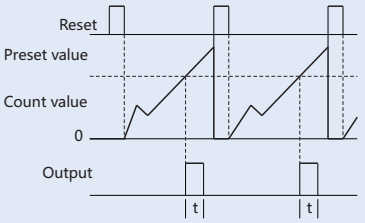
P(P)	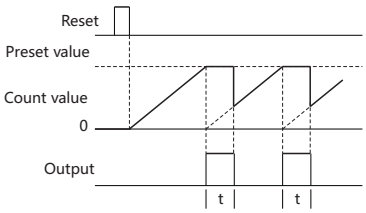	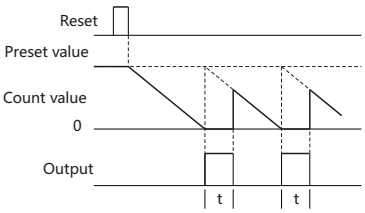	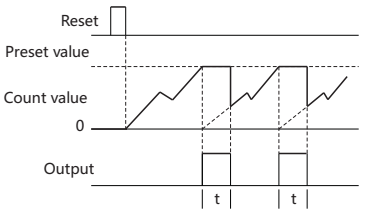
Q(Q)	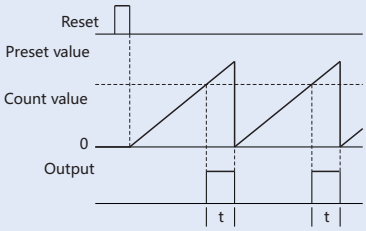	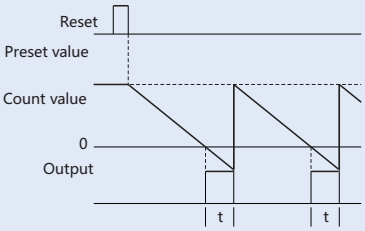	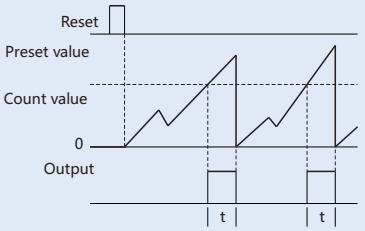
A(A)	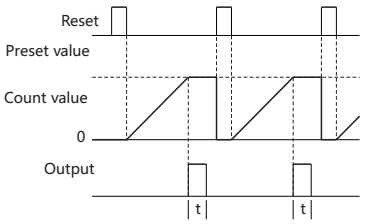	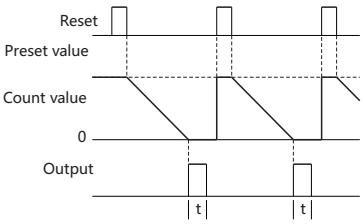	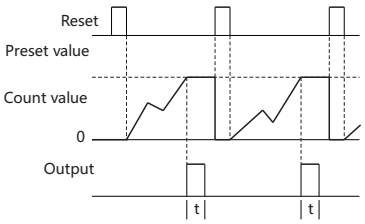

Note: It is the output time, which can be set by the user.
When the function mode for 8 output mode CR mode, when no output counter function mode for CT mode.

«Электро-Профи» - www.ep.ru



JDM15G Counting Relay

1. General

JDM15G counting relay is used as a counting or counting control element in control circuits with an AC frequency of 50Hz/60Hz and a rated control supply voltage of up to 240V and control circuits with a DC rated control supply voltage of up to 240V.

2. Type designation

JDM 15 G /□

- Rated control supply voltage
- Derivative code
- Design sequence No.
- Counting relay

Note: Some models of this product apply to a wide range of operational voltage. For example, an operational voltage of AC/DC100V~240V means that it can operate normally within the voltage range of AC or DC 100V to 240V.

3. Technical data

Operational voltage	85%-110% of rated voltage AC50Hz/60Hz AC/DC100V-240V
Electrical life	1×10^5
Mechanical life	1×10^6
Output mode	2 groups of change-over contacts,open collector output (30VDC 100mA max)
Contact capacity	Ue/Ie: AC-15 220V/0.75A, 380V/0.47A; DC-13 220V/0.27A; Ith:5A
Counting digits	6-digit counting relay
Counting rate	30 times/second, 1000 times/second, can be set by the user
Counting mode	Addition, addition×10,addition×100, subtraction, reversible A, reversible B, reversible C
Input signal	Contact input, sensor input (NPN type/PNP type can be set)
Output mode	N, F, C, R
Output time	The output time can be set within 0.01s~9.99s (under output mode C or R)
Ambient temperature	-5℃~+40℃
Power consumption	≤3VA
Mounting type	Panel type
Overall dimensions	W88×H76×L104mm
Opening size	W69×H69mm
Power-off memory	More than 10 years (can be set)

4. Wiring diagram

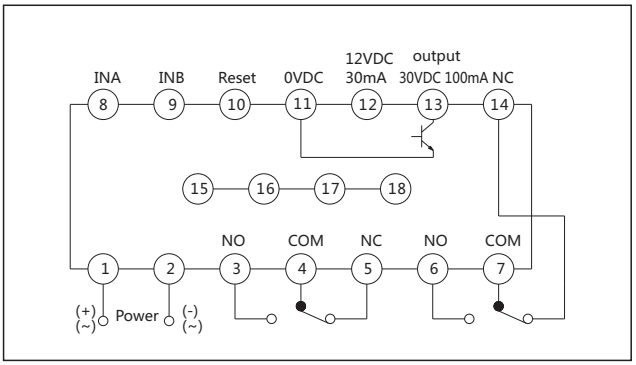

«Электро-Профи» - www.ep.ru

5. Overall and mounting dimensions (mm)

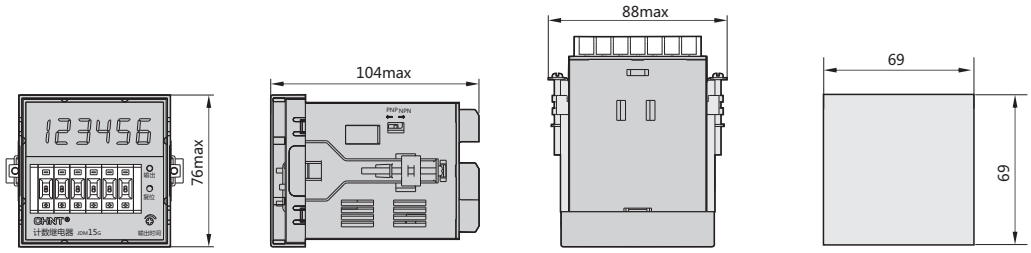

6. Sequence diagram of counting mode

Counting mode	Timing-sequence diagram	Remark
☒ddition counting mode	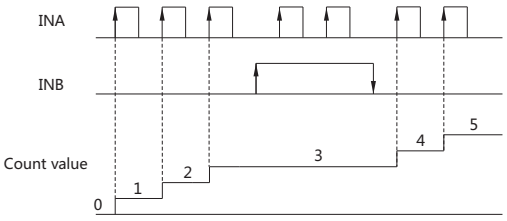	Count at INA rising edge, stop counting at INB input.
	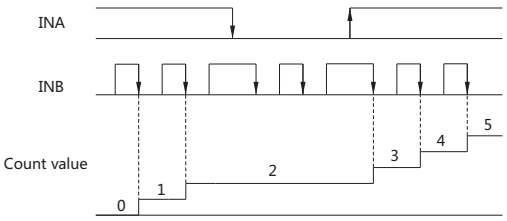	Count at INB input falling edge at INA input.
D Subtraction counting mode	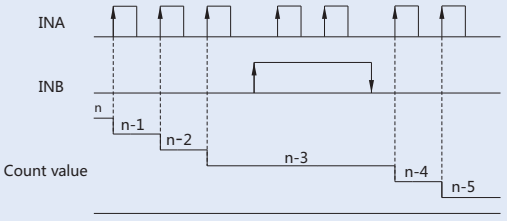 *n Preset value	Count at INA rising edge, stop counting at INB input.
	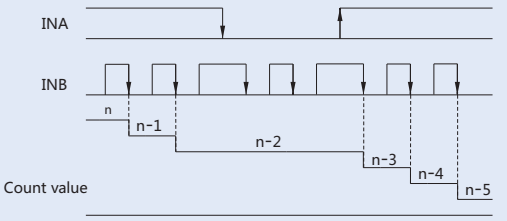 *n Preset value	Count at INB input falling edge at INA input.
UD-A Reversible counting mode A	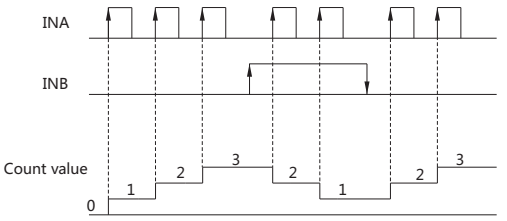	Reversible counting mode A: Addition counting at INA input, subtraction counting when INB input is active.

G

«Электро-Профи» - www.ep.ru

Counting mode	Timing-sequence diagram	Remark
UD-B Reversible counting mode B	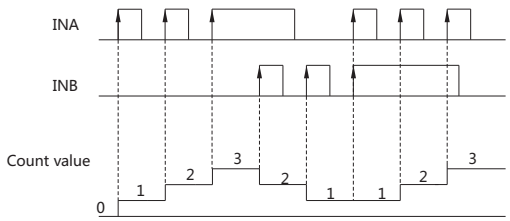	Reversible counting mode B: Addition counting at INA input, subtraction counting at INB input.
UD-C Reversible counting mode C	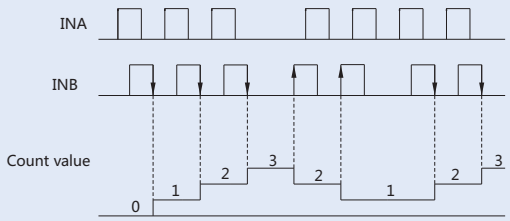	Reversible counting mode C: Automatic recognition of positive and reverse rotations, addition and subtraction counting.

7. Sequence diagram of output mode

Output mode	Plus counting mode	Minus counting mode	Inverse counting mode A, B, C
(N)	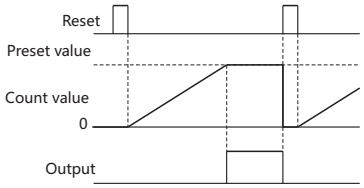	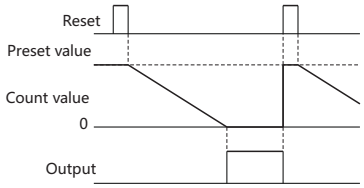	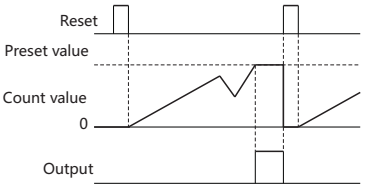
(F)	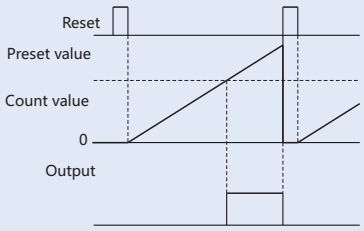	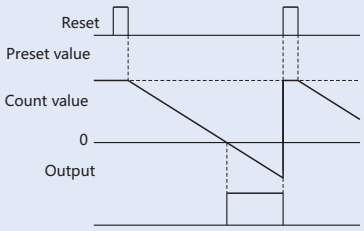	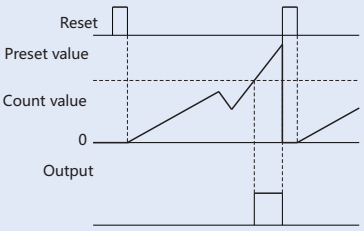
(C)	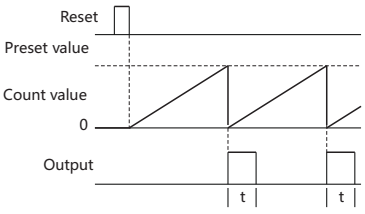	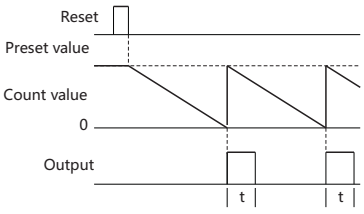	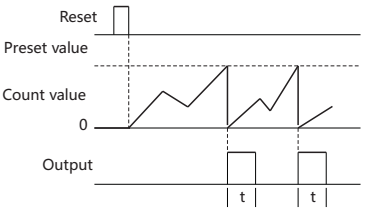
(R)	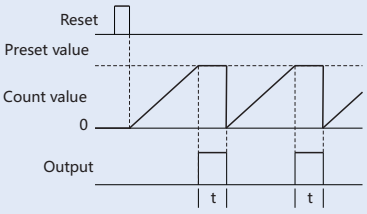	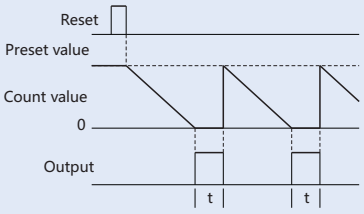	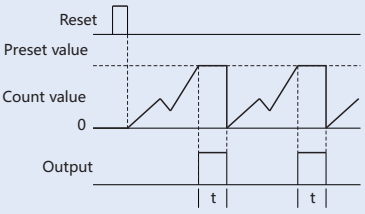

Note: It is the output time, which can be set by the user.

«Электро-Профи» - www.ep.ru



JDM1-48 Counting Relay

1. General

JDM1 series counting relay is used as a counting or counting control element in control circuits with an AC frequency of 50Hz/60Hz and a rated control supply voltage of up to 380V and control circuits with a DC rated control supply voltage of up to 240V.

2. Type designation

JDM 1 - 48 □ □ □ / □

- Rated control supply voltage (AC/DC24V~48V, AC/DC100V~240V, AC220V, AC380V)
- Blank: without power-off memory, M: with power-off memory
- Number of terminals: 8: 8 pins, 11: 11 pins (with 12V output for the sensor)
- Counting rate: L: low speed type, 30 times/second H: high speed type, 200 times/second
- Feature code: 6, 9, 14, 48
- Design sequence No.
- Counting relay

Note: Some models of this product apply to a wide range of operational voltage. For example, an operational voltage of AC/DC24V~48V means that it can operate normally within the voltage range of AC or DC 24V to 48V.

3. Technical data

Operational voltage	85%-110% of rated voltage AC50Hz/60Hz AC/DC100V-240V, AC/DC24V～48V, AC220V, AC380V
Electrical life	1×10^5
Mechanical life	1×10^6
Output mode	1 group of change-over contacts
Contact capacity	Ue/Ie: AC-15 220V/0.75A, 380V/0.47A; DC-13 220V/0.27A; Ith:3A
Counting digits	4-digit counting relay
Counting rate	30 times/second or 200 times/second
Counting mode	Addition, addition ×10, addition ×100 (subtraction counting available upon request)
Input signal	Contact input, NPN type sensor input (PNP type available upon request), Optical coupler input
Output mode	N
Ambient temperature	-5℃~+40℃
Power consumption	≤3VA
Mounting type	Panel type (with socket for rail mounting)
Overall dimensions	W58×H52×L128mm
Opening size	W45.5×H45.5mm
Power-off memory	More than 10 years (power-off memory type)

G

«Электро-Профи» - www.ep.ru

4. Wiring diagram

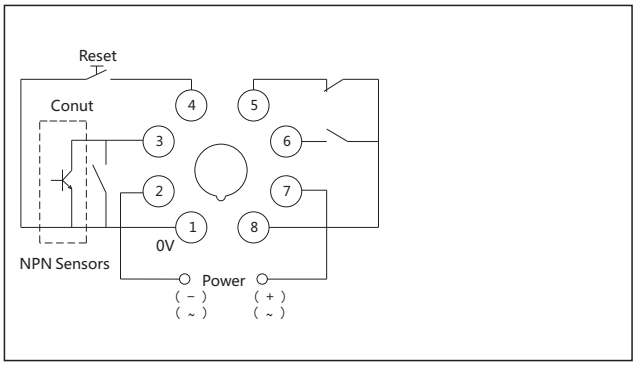

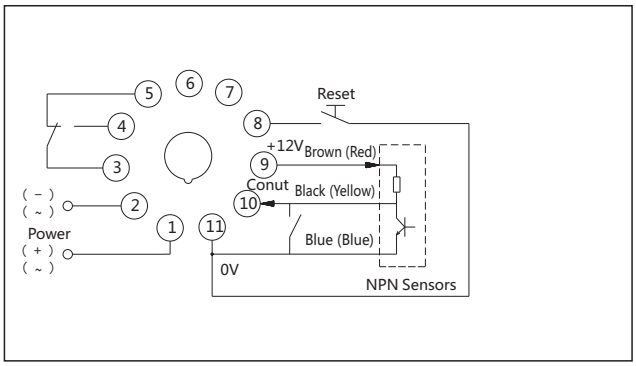

5. Overall and mounting dimensions (mm)

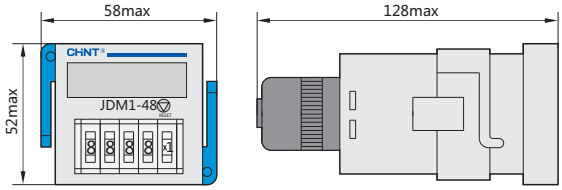

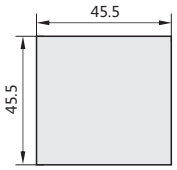

6. Sequence diagram of counting mode

JDM1-48 Timing Chart (No blackout memory)

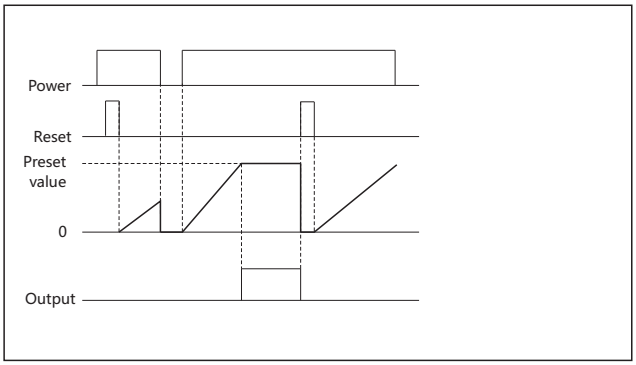

JDM1-48 Timing Chart (With power and memory)

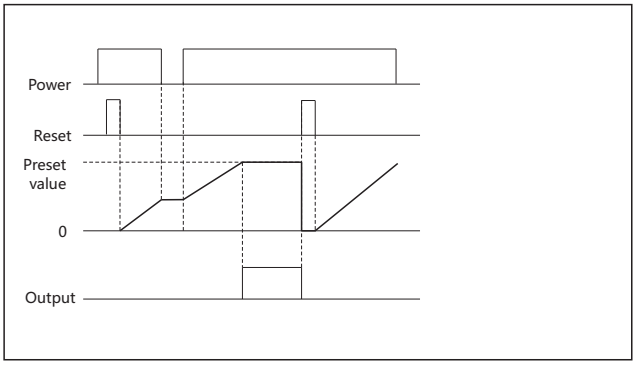

«Электро-Профи» - www.ep.ru



JDM3
Electronic Counter

1. General

JDM3 electronic counter has built-in lithium battery and small overall dimensions and is used to provide counting in various types of circuits.

2. Type designation

JDM 3 - □ □ □

L : low speed counting, 10 times/second;
H: high speed counting, 200 times/second.

Blank: without voltage input;
V: DC voltage input;
A: AC voltage input.

Counting digits: 6: 6-digit counting;
8: 8-digit counting.

Design sequence No.

Counter

3. Technical data

Power supply	Internal power supply
Battery life	Approximately 6 years (25℃)
Display mode	LCD display, zero elimination type (zero display type available upon request)
Output mode	Without output
Counting digits	6-digit counter or 8-digit counter
Counting rate	10 times/second or 200 times/second
Counting mode	Addition counting
Without voltage input	Maximum contact on resistance: ≤10kΩ (counting ON) Minimum contact off resistance: ≥500kΩ (counting OFF) Maximum input residual voltage: 0.5V
DC voltage input	L : DC0V-2V H : 4V-30V (H active) (input impedance: ≥4.7kΩ)
AC voltage input	AC/DC 24V~240V
Reset mode	Panel push-button reset (6-digit), external terminal reset (6-digit, 8-digit)
Minimum reset pulse width	≥0.2s
Counting error	≤±1 time
Ambient temperature	-5℃~+40℃
Mounting type	Panel type
Overall dimensions	W48×H24×L52.9mm
Opening size	W45×H22.5mm

G

«Электро-Профи» - www.ep.ru

4. Wiring diagram

JDM3 (without voltage input)

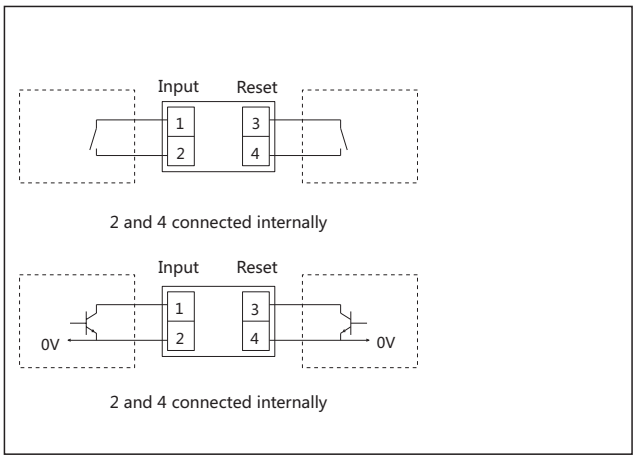

JDM3 (DC voltage input)

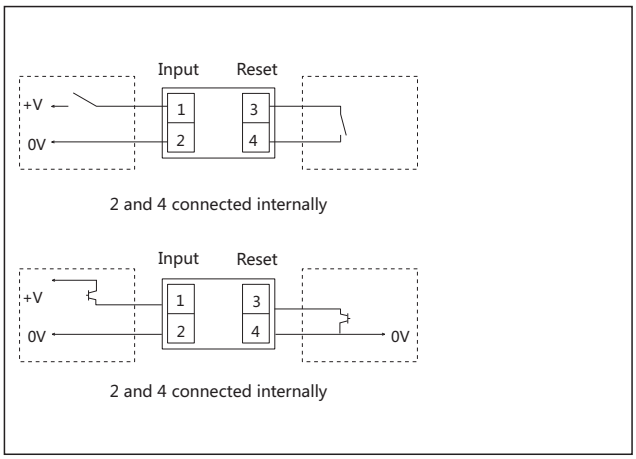

JDM3 (AC voltage input)

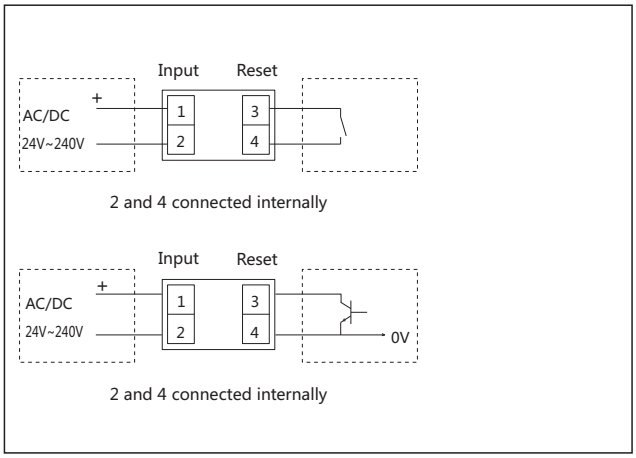

5. Overall and mounting dimensions (mm)

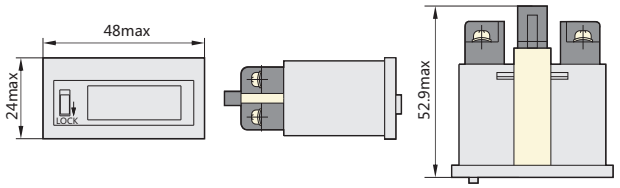

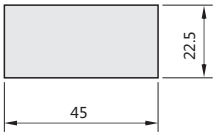

«Электро-Профи» - www.ep.ru



SC3L
Electronic Timer

1. General

SC3L electronic timer has built-in lithium battery and small overall dimensions and is used to provide time accumulation in various types of circuits.

2. Type designation

S C 3 L - □ □

Input signal: Blank: without voltage input;
V: DC voltage input;
A: AC voltage input

Time accumulation range :
1: 99999.9h; 2: 99h59min59s;
3: 9999h59min; 4: 9999day23h;
5: 9999h59min59s; 6: 999999h59min;

Time accumulator

Design sequence No.

LCD display

Electronic type

3. Technical data

Power supply	Internal power supply
Battery life	Approximately 6 years (25℃)
Display mode	LCD display, zero elimination type (zero display type available upon request)
Output mode	Without output
Time accumulation range	1: 99999.9h; 2: 99h59min59s; 3: 9999h59min; 4: 9999day23h; 5: 9999h59min59s; 6: 999999h59min;
Without voltage input	Maximum contact on resistance: ≤10kΩ (time accumulation ON); minimum contact off resistance: ≥500kΩ (time accumulation OFF) Maximum input residual voltage: 0.5V
DC voltage input	L:DC0V-2V H:4V-30V (H active) (input impedance:≥4.7kΩ)
AC voltage input	AC/DC 24V~240V
Reset mode	Panel push-button reset (6-digit), external terminal reset (6-digit & 8-digit)
Minimum reset pulse width	≥0.2s
Time accumulation error	≤0.1%
Ambient temperature	-5℃~+40℃
Mounting type	Panel type
Overall dimensions	W48×H24×L52.9mm
Opening size	W45×H22.5mm

G

«Электро-Профи» - www.ep.ru

4. Wiring diagram

SC3L (without voltage input)

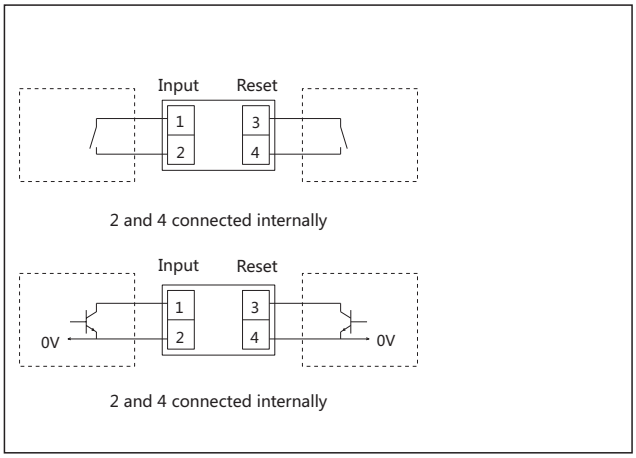

SC3L (DC voltage input)

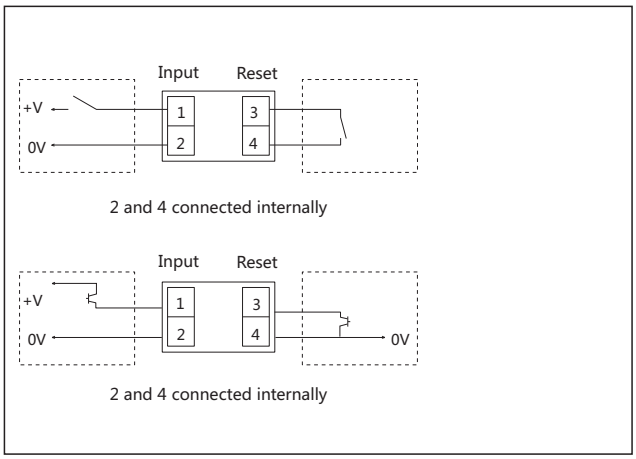

SC3L (AC voltage input)

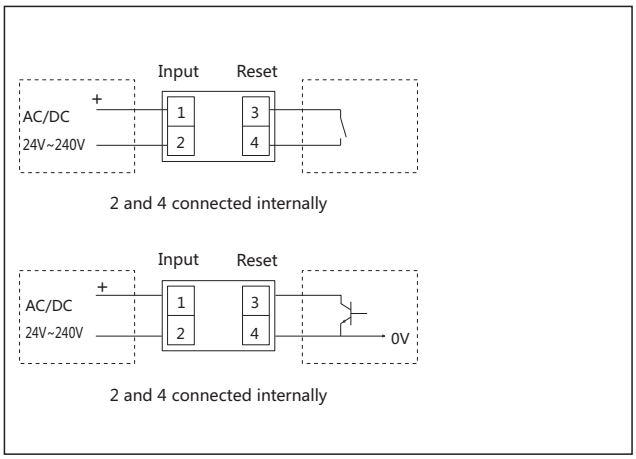

5. Overall and mounting dimensions (mm)

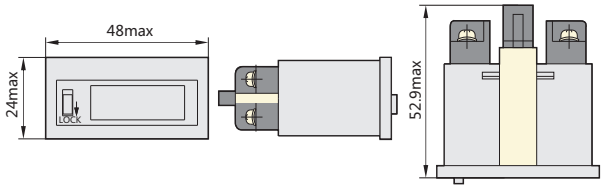

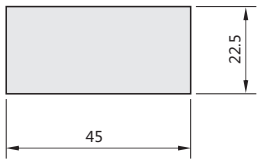

«Электро-Профи» - www.ep.ru



2. Type designation

N JYW 1 - □□/□

- Rated power supply voltage
- Length of electrode lead-wire:
  L1: represents the max length of lead-wire is 1km
  L2: represents the max length of lead-wire is 2km
- Function code:
  N: water supply, water drainage type
  B: water supply and water drainage with anti-exhausted of pump type
- Design sequnce No.
- Floatless relay
- Company code

NJYW1 Floatless Relay

1. General

NJYW1 Series Floatless Relay is used in control circuit @ A.C. 50Hz/60Hz, up to 380V rated supply voltage for liquid level automatic control at places of civil water tower, high cistern, and underground conservation pool, etc. It is capable to realize automatic water supply control or water drainage control according to wiring requirement of user.

This product is not applicable for level control for liquid with poor conductivity such as oil, pure water, flammable & explosive chemical liquid and high density sewage, etc.

CE

G

3. Technical data

Type	NJYW1-NL1	NJYW1-NL2	NJYW1-BL1	NJYW1-BL2
Operating mode	Continuous working			
Contact number	One group changeover contact			
Contact capacity	Ue/Ie:AC-15 220V/0.75A, 380V/0.47A; Ith:5A			
Operating voltage	AC 50Hz/60Hz 36V, 110V/220V, 220V/380V		AC 50Hz/60Hz 36V, 110V, 220V, 380V	
Control electrode voltage	24V			
Conductor length	Max 1km	Max 2km	Max 1km	Max 2km
Operating resistance	≤25kΩ			
Releasing resistance	≥2kΩ			
Response time	Reacting: max 80ms; releasing: max 160ms			
Ambient temperature	-5℃~+40℃			
Power consumption	<3VA			
Installation mode	Guide rail type or device type			

«Электро-Профи» - www.ep.ru

4. Wiring diagram

Wiring diagram for NJYW1-NL1, NJYW1-NL2
water supply mode 110V/220V

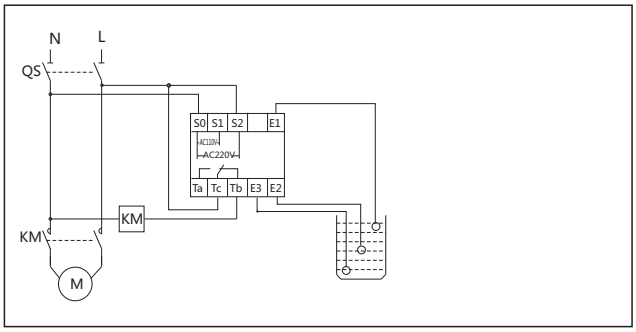

Wiring diagram for NJYW1-NL1, NJYW1-NL2
water drainage mode 110V/220V

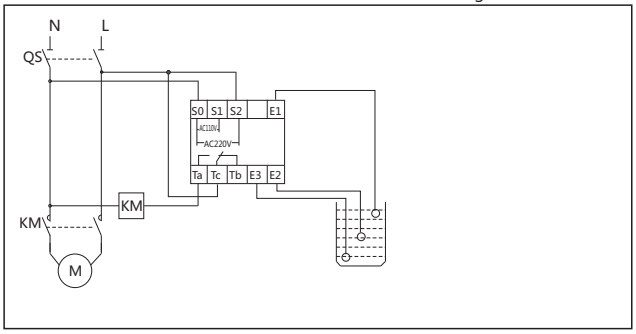

Wiring diagram for NJYW1-NL1, NJYW1-NL2
water supply mode 220V/380V

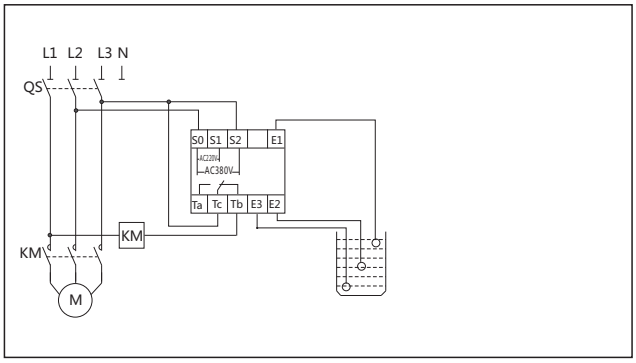

Wiring diagram for NJYW1-NL1, NJYW1-NL2
water drainage mode 220V/380V

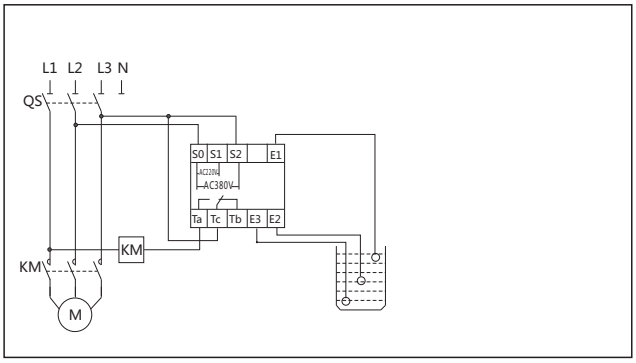

wiring diagram for NJYW1-BL1 and NJYW1-BL2
upper/lower water pool level control 220V

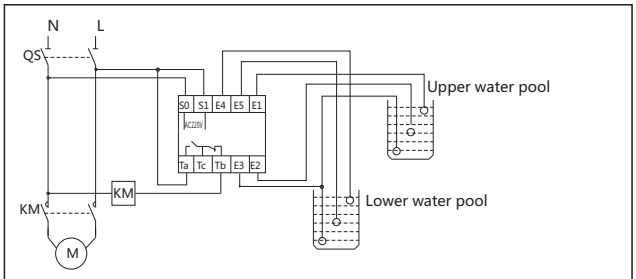

Note: IN NJYW1-BL1 or NJYW1-BL2, Ta,Tc,Tb are not one group of changeover contacts, among which Ta & Tc are one group of independent normally open contacts; Tc & Tb are one group of normally closed contacts

wiring diagram for NJYW1-BL1 and
NJYW1-BL2 upper/lower water pool level control 380V

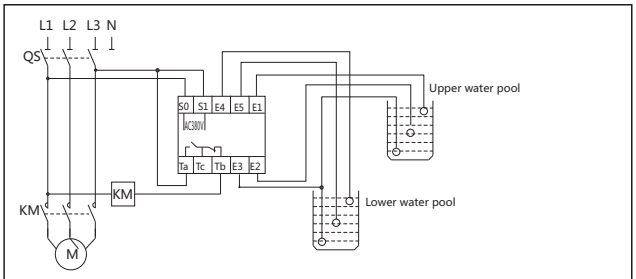

Note: In NJYW1-BL1 or NJYW1-BL2, Ta,Tc,Tb are not one group of changeover contacts, among which Ta & Tc are one group of independent normally open contacts; Tc & Tb are one group of normally closed contacts

Note: NJYW1-BL1 & NJYW1-BL2 can be used as water supply or water drainage control independently, its wiring diagram referring to NJYW1-NL1.

5. Overall and mounting dimensions (mm)

Profile and installation dimensions for NJYW1-NL1,
NJYW1-NL2, NJYW1-BL1, and NJYW1-BL2

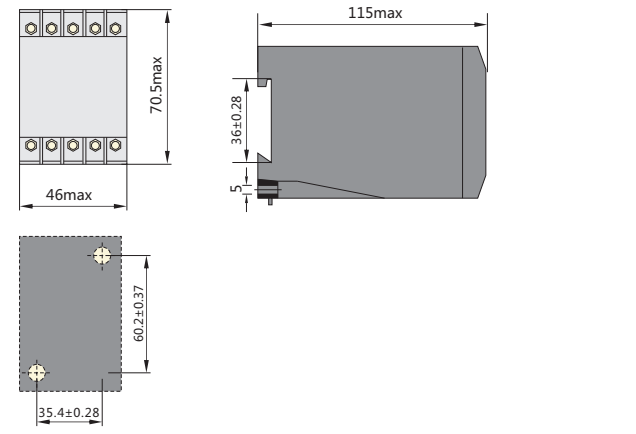

«Электро-Профи» - www.ep.ru



JYB-714 Floatless Relay

1. General

JYB-714 Series Floatless Relay is used in liquid level automatic control circuit @ AC 50Hz/60Hz, up to 380V rated supply voltage for liquid level automatic control at places of civil water tower, high cistern, and underground conservation pool etc.

2. Type designation

JYB - 714 □

Design sequence No.: Nil: Basic type
Type B: with reacting indicator;
Type C: with"water supply"; "drainage" reacting indicator

Floatless Relay

3. Technical data

Type	JYB-714	JYB-714B	JYB-714C
Operating mode	Continuous working		
Contact number	One group of changeover contact		
Contact capacity	Ue/Ie: AC-15 220V/1.5A; Ith:5A		
Operating voltage	AC 50Hz/60Hz 36V, 110V, 220V, 380V (other voltage can be custom made)		
Conductor length Ambient temperature	Max 1km -5℃~+40℃		
Power consumption	<3VA		
Installation mode	Device type or guide rail type		

4. Wiring diagram

Wiring diagram for JYB-714, JYB-714B, JYB-714C
220V water supply mode

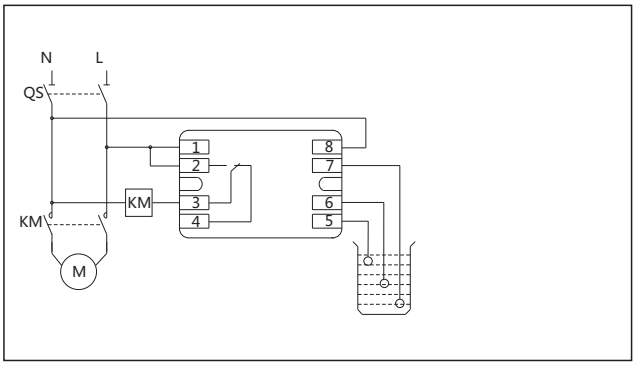

Wiring diagram for JYB-714, JYB-714B, JYB-714C
380V water supply mode

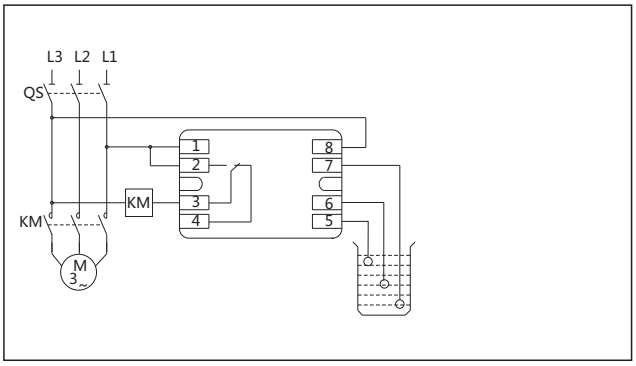

G

«Электро-Профи» - www.ep.ru

Wiring diagram for JYB-714, JYB-714B, JYB-714C
220V water drainage mode

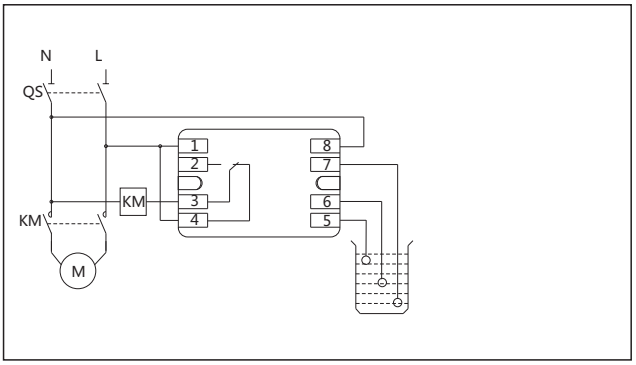

Wiring diagram for JYB-714, JYB-714B, JYB-714C
380V water drainage mode

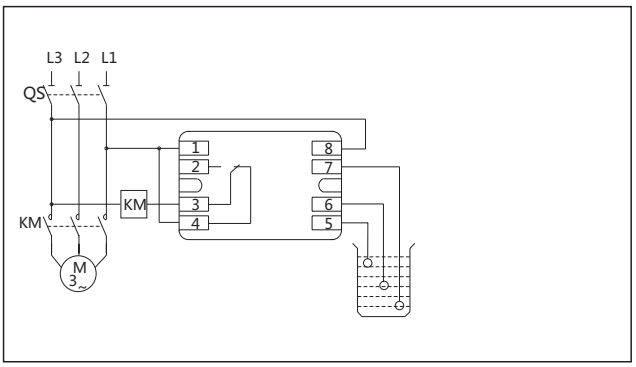

5. Overall and mounting dimensions (mm)

JYB-714 profile and installation dimensions

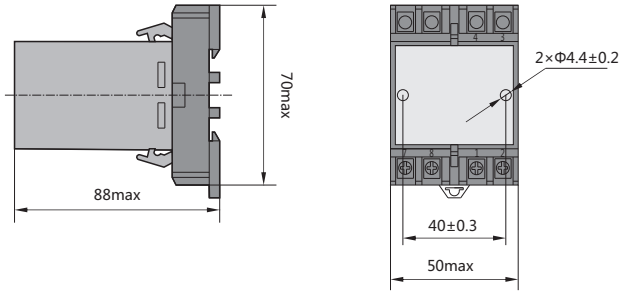

JYB-714B profile and installation dimensions

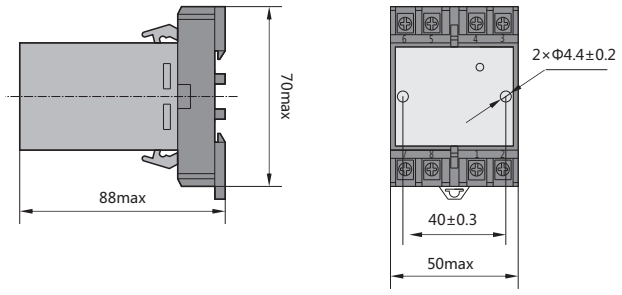

JYB-714C profile and installation dimensions

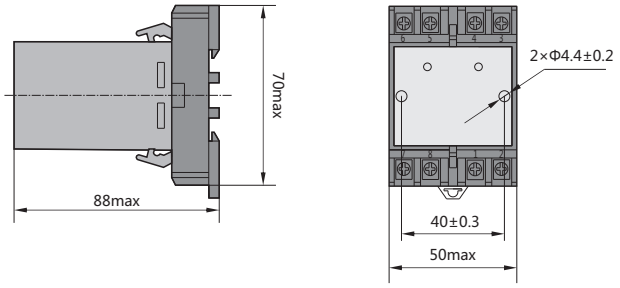

«Электро-Профи» - www.ep.ru



NJA1-KG Smart Relay

1. General

NJA1-KG smart relay is suitable for timing on or off control in control circuit with rated control of power supply voltage of 110V ~ 240V, and rated insulation voltage up to 240V, and can also be used as time control component to turn on or off the circuit at a predetermined time.

2. Type designation

N J A 1 - KG

- KG: Time controller
- 1: Design sequence No.
- A: APP Smart
- J: Relay
- N: Company code

G

3. Technical Data

Technical parameters	NJA1-KG
Rated control supply voltage	AC/DC 110V～240V
Setting method	APP
Operation mode	Timing (alarm), on-delay, interval delay, cycle delay
Time	hour: minute: second
Maximum number of timings	100 groups
Delay range	1s～99h59min59s
Other functions	Manual switch, latitude function
Contact capacity	Ue/Ie：AC-12 240V/10A
Electrical life	1×10^5
Mechanical life	2×10^6
Ambient temperature	-5℃～40℃
Mounting Type	Rail type

4. Wiring diagram

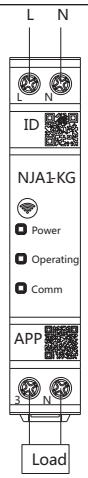

5. Overall and mounting dimensions

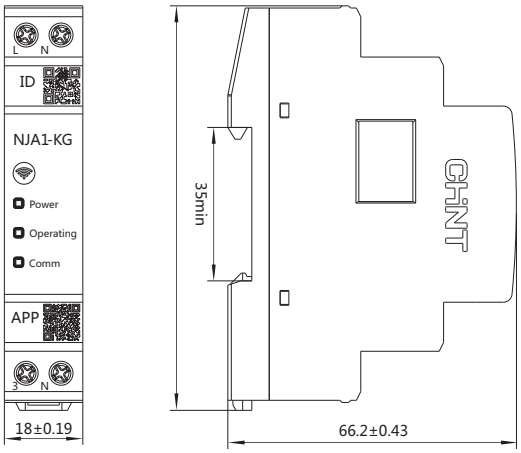

«Электро-Профи» - www.ep.ru



NJA1-L Smart Relay

1. General

NJA1-L smart relay is used as a logic control element in a control circuit with rated control power supply voltage of 110V to 240V and rated insulation voltage of up to 240V, and performs relevant operation according to the set program.

2. Type designation

N J A 1 - L

- L: Programmable logic controller
- 1: Design sequence No.
- A: APP Smart
- J: Relay
- N: Company code

G

«Электро-Профи» - www.ep.ru

3. Technical Data

Technical parameters	NJA1-L
Rated control supply voltage	AC/DC 110V~240V
Programming method	APP
On-off in put	4 groups
On-off out put	4 groups
Analog input / parameter	4 groups/DC 0V~10V
Maximum number of supported function blocks	200
Variable	100 (boolean, characters)
Extended function	Support up to 28 On-off inputs (excluding the main unit), 28 On-off outputs (excluding the main unit), 28 analog inputs (excluding the main unit), 32 analog outputs, and an extension of RS485/Modbus communication.
Contact capacity	Ue/Ie : AC-15 240V/1.5A
Electrical life	1×10^{5}
Mechanical life	2×10^{6}
Ambient temperature	-5℃~40℃
Mounting Type	Rail type

4. Wiring diagram

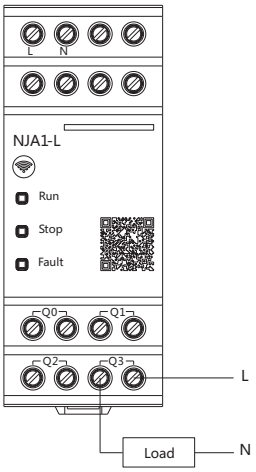

5. Overall and mounting dimensions

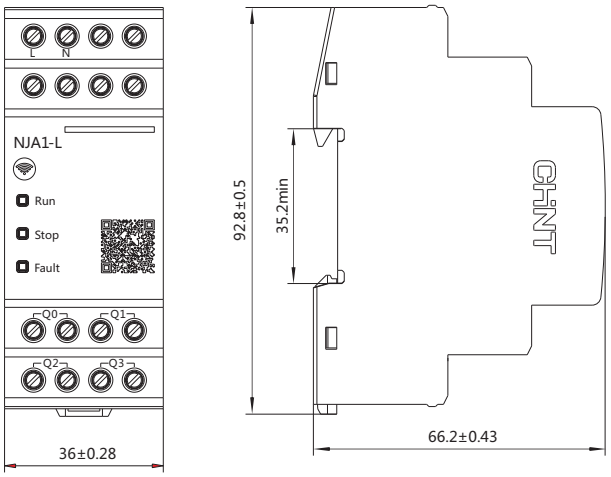

«Электро-Профи» - www.ep.ru

Socket

CZS08C	CZF11A-E (with finger safety protection)
	
70×50×20(mm)	52×44×31(mm)
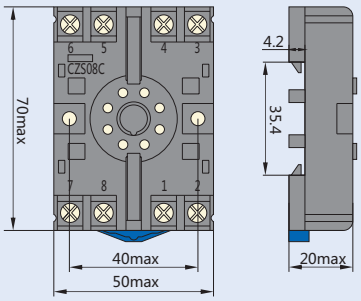	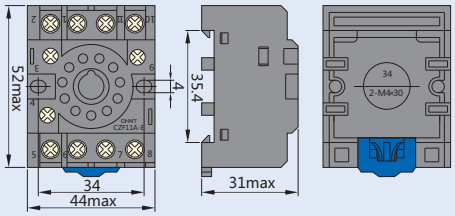
Applicable relay type: JSS48A, JDM1-48, KG10M, JYB-714 and NJS1	Applicable relay type: JS14S device type, and JDM1-14

CZS08G	CZS08X-E (with finger safety protection)
	
48.8×40×20.1(mm)	72×43.6×21(mm)
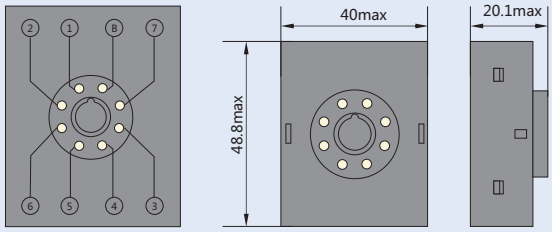	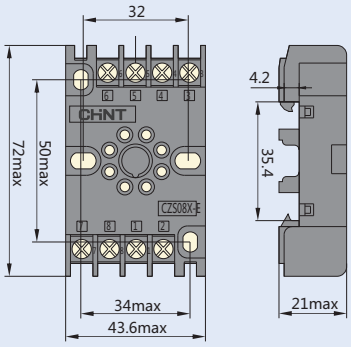
Applicable relay type: JSS48A, NJS1, JDM1-48, KG10M, and JSZ3H-Y	Applicable relay type: JSZ3A, JSZ3C, JSZ3-2/3, JSZ3K, JSZ3R, JSZ3F, and JSZ3Y

G

«Электро-Профи» - www.ep.ru

CZY08B-01 (wide type, copper strip connection)



63×30.5×26(mm)

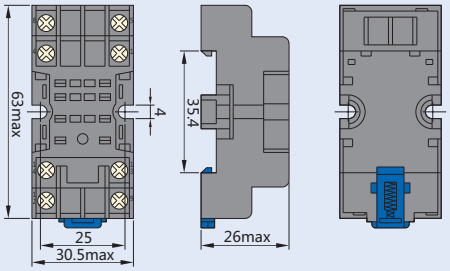

Applicable relay type: JSZ6-2

CZY14B (copper strip connection)



63×30.5×26(mm)

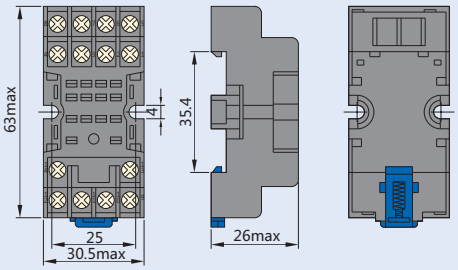

Applicable relay type: JSZ6-4

CZS08S



Φ32.4×36.2(mm)

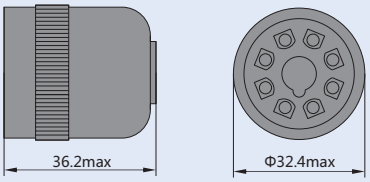

Applicable relay type: JSS48A, JDM1-6, JSZ3H-Y, NJS1

CZS11S



Φ32.4×36.2(mm)

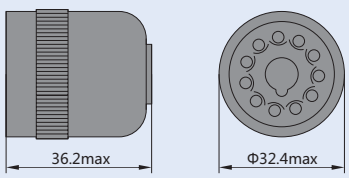

Applicable relay type: JSS48A-11, JDM1-48, NJS1-11

FM8858



Applicable relay type: JSZ3

«Электро-Профи» - www.ep.ru

CZY08A-E	CZY14A-E (with finger safety protection)
	
72×23×31(mm)	72×30×31(mm)
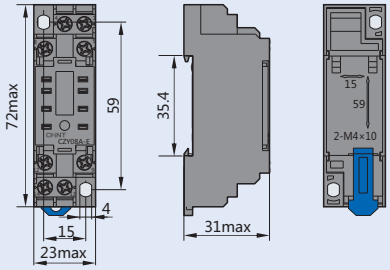	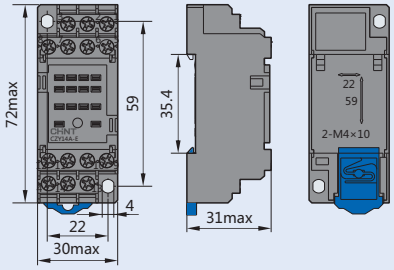
Applicable relay type: JSZ6-2	Applicable relay type: JSZ6-4

G

«Электро-Профи» - www.ep.ru



NJX-13FW Miniature Power Relay

1. General

1.1 3A, 5A, 10A switching capacity
1.2 Wide range of coil ratings
1.3 Fully sealed
1.4 Certificate: CE, UL

2. Type designation

NJX-13FW (D) / 006 - 2Z 1 1

- Installation:
  1=top flange type;
  2=lateral flange type;
  blank=standard type
- Termination: 1=PCB 6=Plug-in
- Contact arrangement:
  2Z=2C(10A); 2ZS=2C(5A);
  3ZS=3C; 4ZS=4C
  Coil type: ~= AC; - = DC
- Coil voltage : DC: 5V~220V;
  AC: 6V~380V
- Type:
  D=with LED indicator;
  B=With LED indicator and surge withstand(DC);
  M=With arc suppression cover (only 4C);
  Blank=Standard
- Series

3. Technical data

Contact Arrangement		2Z	2ZS	3ZS	4ZS
Initial contact resistance	mΩ	100			
Contact material	Ag alloy				
Rated load (resistive)	A (220VAC/28VDC)	10	5	5	3
Max. switching voltage	VAC	250			
	VDC	125			
Max. switching current	A	10	5	5	3
Max. switching power	VA	2200	1100	1100	660
	W	280	140	140	84
Electrical endurance	Cycles	3×10^5			
Machenical endurance	Cycles	1×10^7			

4. Coil specification

AC

Rated voltage	Holding voltage	Must drop-out voltage	Operating range	Power consumption
6	≤80%Ue	≥20%Ue	(80%~110%) Ue	1.8VA
12				
24				
36				
48				
110				
127				
220				
230				
380				

DC

Rated voltage	Holding voltage	Must drop-out voltage	Operating range	Power consumption
5	≤75%Ue	≥10%Ue	(75%~110%) Ue	0.9W
6				
12				
24				
36				
48				
110				
127				
220				

«Электро-Профи» - www.ep.ru

5. Characteristics

Insulation resistance(at 500VDC)		MΩ	100
Dielectric strength	Between coil & contacts		1500VAC
	Between open contacts		500VAC
Operation time		ms	≤25
Release time		ms	≤25
Shock resistance		m/s^2	100
Vibration			(10～55)Hz,1mm double amplitude
Ambient temperature range		℃	-25～+55
Termination			Plug-in, PCB
Dimension		mm	27.5×21.5×35.5

6. Overall and mounting dimensions (mm)

Internal connection	2Z	2ZS	3ZS	4ZS
Standard type	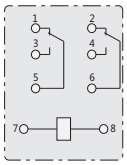	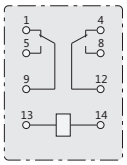	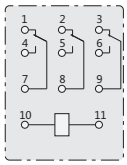	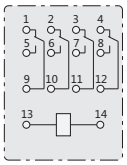
with indicator	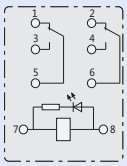	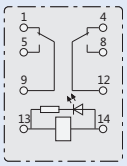	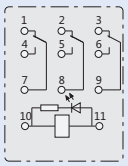	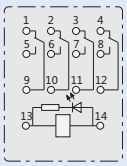
with indicator and diode	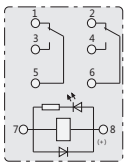	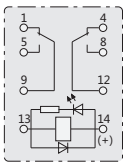	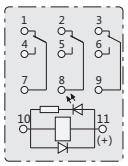	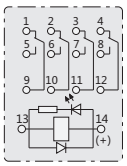
PCB mounting holes	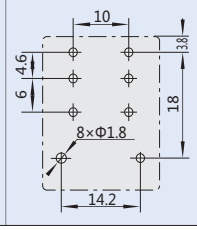	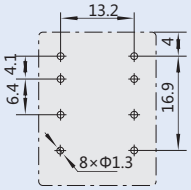	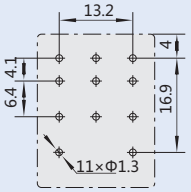	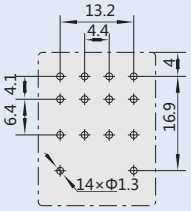

«Электро-Профи» - www.ep.ru

Dimensions	2Z	2ZS	3ZS	4ZS
Plug-in type	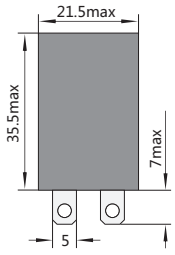	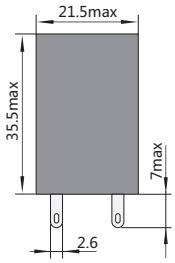	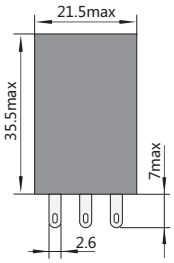	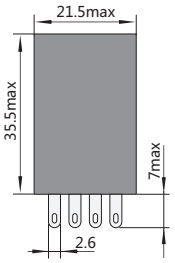
PCB type	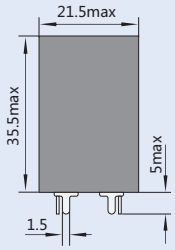	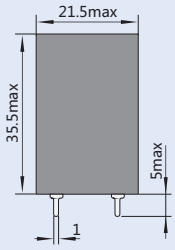	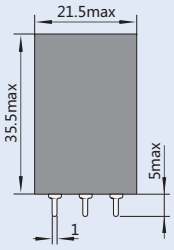	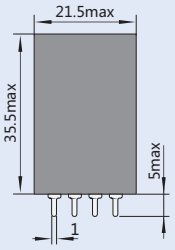

Installation	2Z	2ZS	3ZS	4ZS
Top flange type	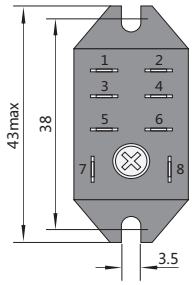	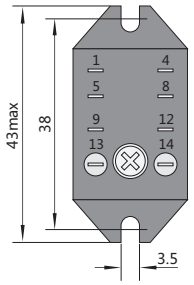	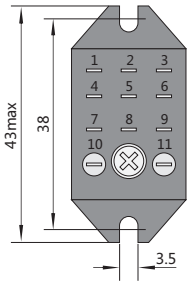	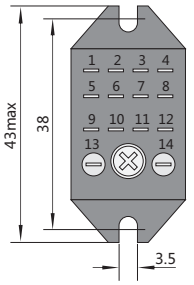
Lateral flange type	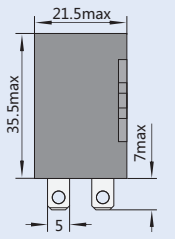	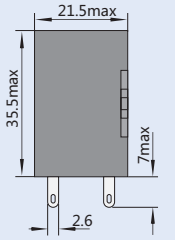	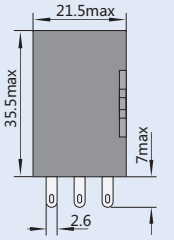	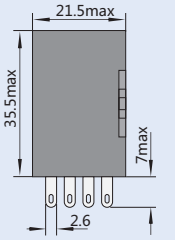

«Электро-Профи» - www.ep.ru



NJDC-17
Small Electromagnetic Relay with Test Button

1. General

2Z,2ZS, 3ZS, 4ZS contact forms; with self-locking test button; transparent dust cover package, diverse mounting modes available; equipped with a variety of sockets options; optional with the specifications of the status indicator.

CE

2. Operating conditions

Temperature Range	-25℃~+55℃
Relative humidity	90% RH at+20℃
Atmospheric pressure	86kPa~106kPa
Working position	Any

3. Technical data

3.1 Contact parameters

Contact form	2Z(C),3Z(C),4Z(C)
Initial contact resistance	100mΩ
Contact Material	Ag alloy
Contact load (COSΦ = 1.0)	2Z：10A；2ZS,3ZS：5A；4ZS：3A(220VAC/28VDC)
Maximum switching voltage	250VAC/125VDC
Maximum switching current	2Z：10A；2ZS,3ZS：5A；4ZS：3A
Maximum switching power	2Z:2200VA/280W
	2ZS,3ZS：1100VA/140W
	4ZS：660VA/84W
Electrical life (times)	1×10^5 (See safety certification report)
Mechanical life (times)	1×10^7

G

«Электро-Профи» - www.ep.ru

3.2Performance, and characteristic parameter

Insulation Resistance		100MΩ(500VDC)
Dielectric Strength	Contact and coil	1500VAC
	Between open contacts	500VAC
Action time		≤25ms
Release time		≤25ms
Shock (stability)		Acceleration 100m/s^2, pulse duration of 11ms
Vibration		Double amplitude of 1 mm (10~ 55) Hz
Terminal form		Pluggable PCB type
Outside dimensions (mm)		27.5×21.5×35.5

3.3 Coil parameters

Rated power consumption	0.9W 1.8VA
Pull-in voltage	DC: ≤ 75% rated voltage; AC: ≤ 80% of rated voltage
Release voltage	DC: ≥ 10% rated voltage; AC: ≥ 20% of rated voltage
Maximum voltage	110% rated voltage

3.4 Specifications

Rated voltage VDC	Action voltage VDC (≤)	Release Voltage VDC (≥)	Coil resistance Ω ± 10%
5	3.75	0.5	28
6	4.5	0.6	40
12	9.0	1.2	160
24	18.0	2.4	640
36	27.0	3.6	1440
48	36.0	4.8	1900
110	82.5	11.0	14500
127	95.3	12.7	18000
220	165.0	22.0	39000

Rated voltage VAC	Action voltage VAC (≤)	Release Voltage VAC (≥)	Coil resistance±10%
6	4.8	1.2	10.5
12	9.6	2.4	44
24	19.2	4.8	160
36	28.8	7.2	380
48	38.4	9.6	650
110	88.0	22	3300
127	101.6	25.4	4100
220	176.0	44	14500
380	304.0	72	39000

Note: The coil coil temperature parameter is value in 20℃

«Электро-Профи» - www.ep.ru

4. Other

Supporting socket (alternative)

Relay Model	NJDC-17(D)/2Z			
Model of equipped socket	CZT08A-E	CZT08A-02	CZT08B-01	CZT08B-01E
Socket Dimensions (mm)	79×29×33	72×23×31	68×30×28	68×30×28
Socket lead form	Screw-type terminals (device type, rail)			
Relay Mode	**NJDC-17(D)/2ZS**			
Model of equipped socket	CZY08A-E	CZY08B-01		
Socket Dimensions (mm)	72×23×31	63×30.5×26		
Socket lead form I	Screw-type terminals (device type, rail)			
Relay Mode	**NJDC-17(D)/3ZS**			
Model of equipped socket	CZY11A-E	CZY11B		
Socket Dimensions (mm)	72×30×31	63×30.5×26		
Socket lead form I	Screw-type terminals (device type, rail)			
Relay Mode	**NJDC-17(D)/4ZS**			
Model of equipped socket	CZY14A-E	CZY14B	CZY14B-E	
Socket Dimensions (mm)	72×30×31	63×30.5×26	63×30.5×26	
Socket lead form I	Screw-type terminals (device type, rail)			

5. Outside shape and mounting dimensions

Bottom wiring diagram (2Z)

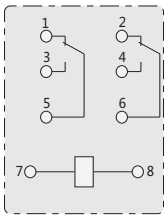

Bottom wiring diagram (2ZS)

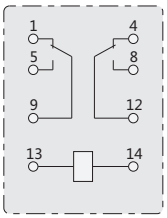

Bottom wiring diagram (3ZS)

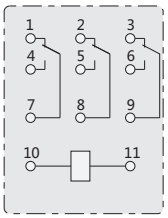

Bottom wiring diagram (4ZS)

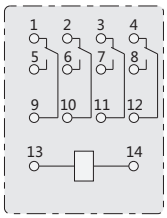

Bottom wiring diagram (2Z with indicator)

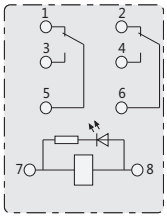

Bottom wiring diagram (2ZS with indicator)

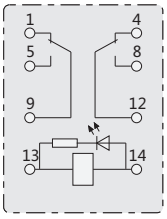

Bottom wiring diagram (3ZS with indicator)

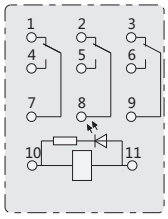

Bottom wiring diagram (4ZS with indicator)

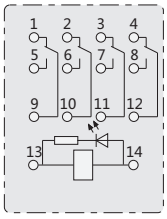

Bottom wiring diagram (2Z with indicator and diode)

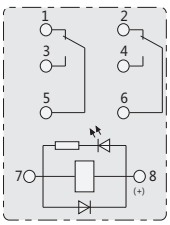

Bottom wiring diagram (2ZS with indicator and diode)

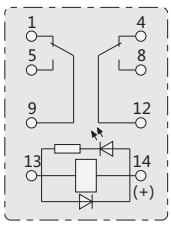

Bottom wiring diagram (3ZS with indicator and diode)

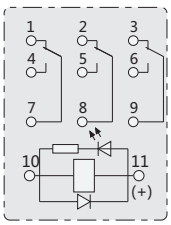

Bottom wiring diagram (4ZS with indicator and diode)

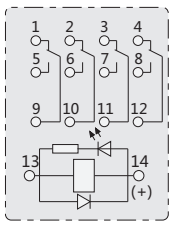

G

«Электро-Профи» - www.ep.ru

PCB outline drawing (2Z)

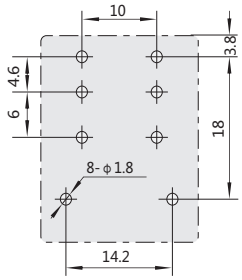

PCB outline drawing (2ZS)

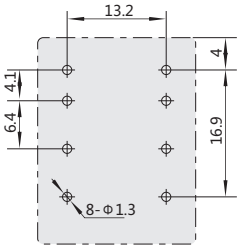

PCB outline drawing (3ZS)

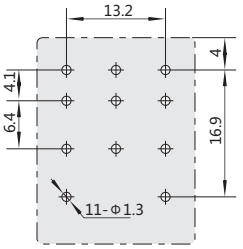

PCB outline drawing (4ZS)

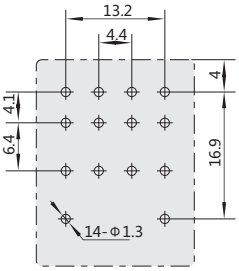

Outside dimensions drawing (2Z pluggable)

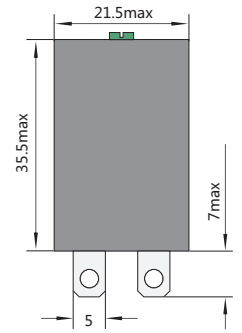

Outside dimensions drawing (2ZS pluggable)

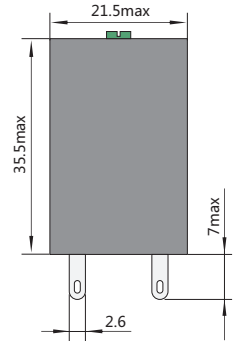

Outside dimensions drawing (3ZS pluggable)

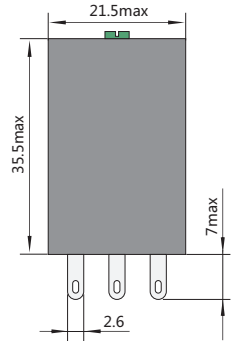

Outside dimensions drawing (4ZS pluggable)

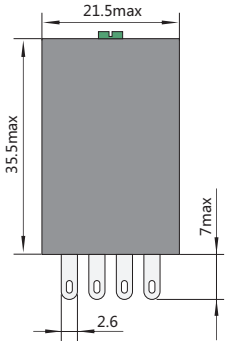

PCB outline drawing (2Z)

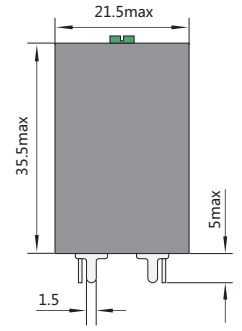

PCB outline drawing (2ZS)

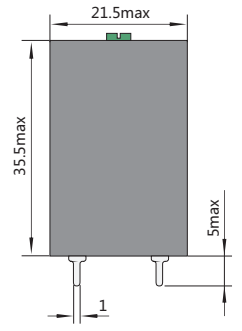

PCB outline drawing (3ZS)

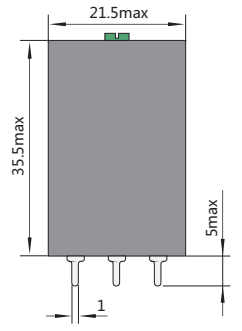

PCB outline drawing (3ZS)

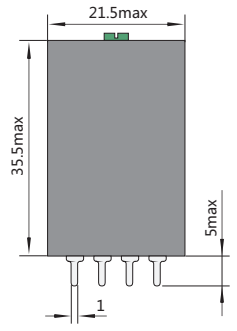

6 Ordering Information

NJDC-17	(D)	/	2Z	AC220V	1
Relay Model	D: with status indicator B: with status indicator And surge suppression (DC) M: with arc suppression cover (Used for 4ZS specifications) No: ordinary type		Contact form 2Z: two sets of conversion(2C) 2ZS: two sets of conversion(2C) 3ZS: three sets of conversion(3C) 4ZS: four sets of conversion(4C)	Coil rated voltage DC (5 ~ 220) V AC (6 ~ 380) V	Terminal form 1: PCB type 6 or omitted: Plug-in

«Электро-Профи» - www.ep.ru



JQX-13F Miniature High-Power Electromagnetic Relay

1. General

Contact switching capability of 10A; a complete range of AC/DC specifications; enclosed in transparent dust cover, a variety of mounting types; various sockets available; Specifications with state indicators available; certifictaion: CE UL; models of the same type: LY2(N), HH62P(-L).

2. Technical data

Contact Arrangement		2Z	2ZS	3ZS	4ZS
Initial contact resistance	mΩ	100			
Contact material	Ag alloy				
Rated load (resistive)	A (220VAC/28VDC)	10	5	5	3
Max. switching voltage	VAC	250			
	VDC	125			
Max. switching current	A	10	5	5	3
Max. switching power	VA	2200	1100	1100	660
	W	280	140	140	84
Electrical endurance	Cycles	3×10^5			
Machenical endurance	Cycles	1×10^7			

3. Normal operating conditions and mounting conditions

Temperature range	-25℃~+55℃
Relative humidity	90%RH at +20℃
Atmospheric pressure	86kPa~106kPa
Working position	Any

4. Technical data

4.1 Contact data

Contact form	2Z(C)
Initial contact resistance	100mΩ
Contact material	Ag alloy
Contact load (resistive)	10A/220VAC、10A/28VDC
Max. switching voltage	250VAC/125VDC
Max. switching current	10A
Max. switching power	2200VA 280W
Electrical life (times)	1×10^5
Mechanical life (times)	1×10^7

G

«Электро-Профи» - www.ep.ru

4.2 Characteristics data

Insulation resistance		100MΩ(500VDC)
Dielectric strength	Between coil & yoke, between different groups of contacts	1500VAC
	Between open contacts	500VAC
Operation time		≤25ms
Release time		≤25ms
Shock (resistance)		Acceleration: 100m/s^2, pulse duration: 11ms
Vibration		1mm double amplitude, (10~55)Hz
Outlet terminal type		Plug-in type, PCB type
Overall dimensions (mm)		27.5×21.5×35.5

4.3 Coil data

Rate power consumption	0.9W, 1.8VA
Pick-up voltage	DC: ≤75% rated voltage; AC: ≤80% rated voltage
Release voltage	DC: ≥10% rated voltage; AC: ≥20% rated voltage
Max. voltage	110% Rated voltage

4.4 Specification data

Rated voltage	Operation voltage VDC(≤)	Release voltage VDC(≥)	Coil resistance Ω±10%
5	3.75	0.5	28
6	4.5	0.6	44
12	9.0	1.2	160
24	18.0	2.4	640
36	27.0	3.6	1440
48	36.0	4.8	2560
110	82.5	11.0	14500
127	95.3	12.7	17000
220	165.0	22.0	39000

Rated voltage	Operation voltage VDC(≤)	Release voltage VDC(≥)	Coil resistance Ω±10%
6	4.8	1.2	10.5
12	9.6	2.4	44
24	19.2	4.8	180
36	28.8	7.2	380
48	38.4	9.6	650
110	88.0	22	3670
127	101.6	25.4	4100
220	176.0	44	14500
380	304.0	76	39000

5. Matching socket (optional)

Relay model	JQX-13F(D)/2Z			
Model of matching socket	CZT08A-01	CZT08A-02	CZT08B-01	CZT08B-01E
Overall dimensions of socket (mm)	72×30×31	72×23×31	68×30×28	68×30×28
Type of socket lead	Screw terminal (installation type, rail type)			

«Электро-Профи» - www.ep.ru

6. Overall and mounting dimensions (mm)

Connection diagram (bottom view) (2Z)

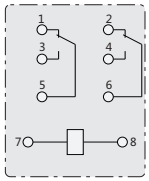

Outline drawing (plug-in type)

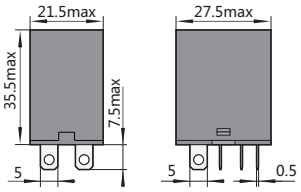

Connection diagram (bottom view) 2Z(D)

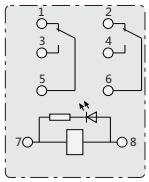

Outline drawing (PCB type)

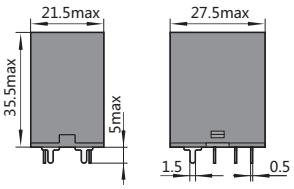

Connection diagram (bottom view) 2Z(B)

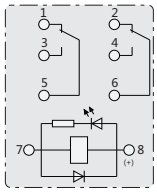

Outline drawing (lateral flange type)

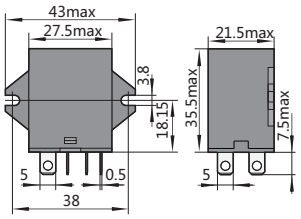

PCB opening drawing (2Z)

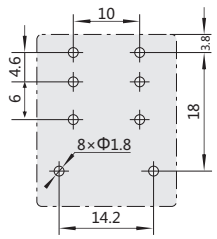

Outline drawing (top flange type)

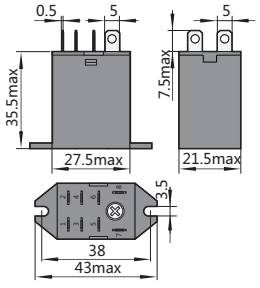

G

«Электро-Профи» - www.ep.ru



JZX-22F Miniature Power Relay

1. General

1.1 3A, 5A switching current
1.2 Various sockets available
1.3 With indicator to be selected
1.4 Full range of AC and DC coil
1.5 Certificate: CE, UL.

2. Type designation

JZX-22F (D) / 006 - 2Z 1 1

- Installation: 1=top flange type; 2=lateral flange type; blank=standard type
- Termination: 1=PCB, 6=Plug-in
- Contact arrangement 2Z=2C; 3Z=3C; 4Z=4C
- Coil type: ~= AC; - = DC
- Coil voltage : DC: 5V~220V; AC: 6V~380V
- Type: D=with LED indicator; B=With LED indicator and surge withstand(DC); M=With arc suppression cover (only 4C); Blank=Standard
- Series

«Электро-Профи» - www.ep.ru

3. Technical data

Contact Arrangement		2C	3C	4C
Initial contact resistance	mΩ	100		
Contact material		Silver alloy		
Rated load(resistive)		5A/220VAC		3A/220VAC
		5A/28VDC		3A/28VDC
MAX. switching voltage	VAC	250		
	VDC	125		
MAX. switching current	A	5		3
Max. swithcing capacity	VA	1100		660
	W	140		84
Electrical endurance	Cycles	1×10^5		
Machenical endurance	Cycles	1×10^7		

4. Coil specification

AC

Rated voltage	Holding voltage	Must drop-out voltage	Operating range	Power consumption
6	≤80%Ue	≥20%Ue	(80%~110%)Ue	1.8VA
12				
24				
36				
48				
110				
127				
220				
230				
380				

DC

Rated voltage	Holding voltage	Must drop-out voltage	Operating range	Power consumption
5	≤75%Ue	≥10%Ue	(75%~110%)Ue	0.9W
6				
12				
24				
36				
48				
110				
127				
220				

5. Characteristics

Insulation resistance(at 500VDC)		MΩ	100
Dielectric strength	Between coil & contacts		1500VAC
	Between open contacts		500VAC
Operation time		ms	≤25
Release time		ms	≤25
Shock resistance		m/s^2	100
Vibration			(10～55)Hz,1mm double amplitude
Humidity			90% RH at +20℃
Ambient temperature range		℃	-25～+55
Termination			Plug-in, PCB
Dimension		mm	27.5×21.5×35.5

«Электро-Профи» - www.ep.ru

6. Overall mounting dimensions (mm)

Internal connection(bottom view)

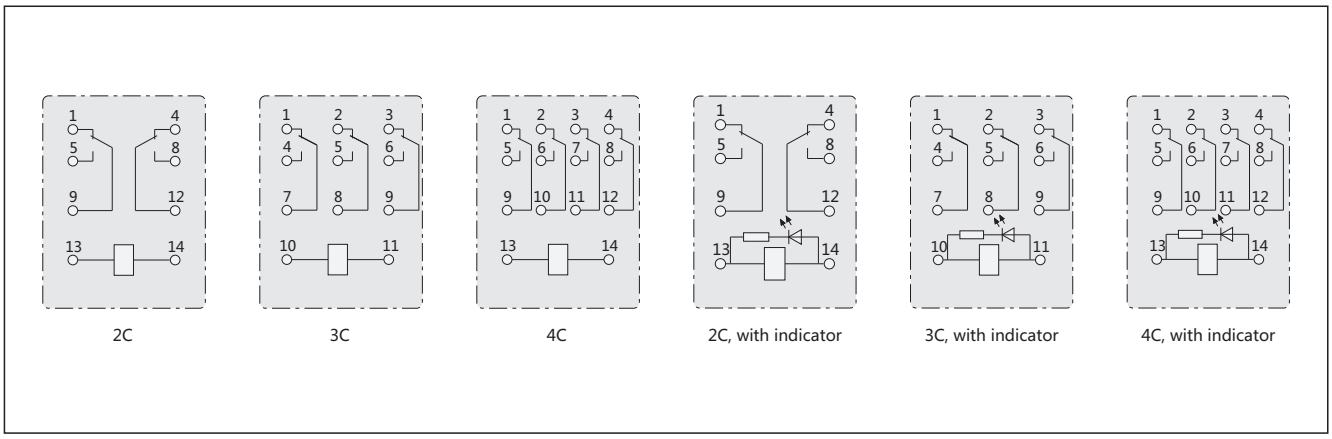

Internal connection(botton view)

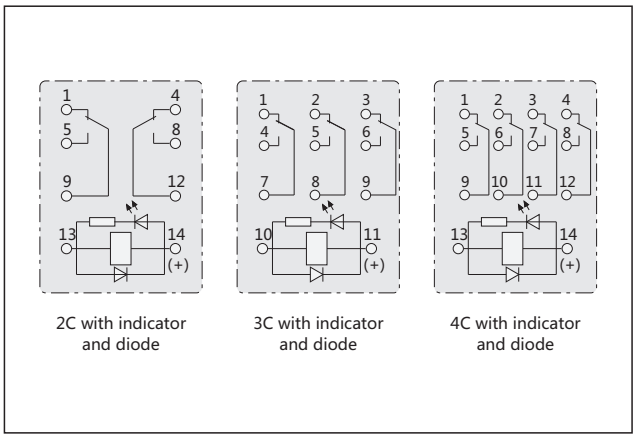

PCB mounting poles

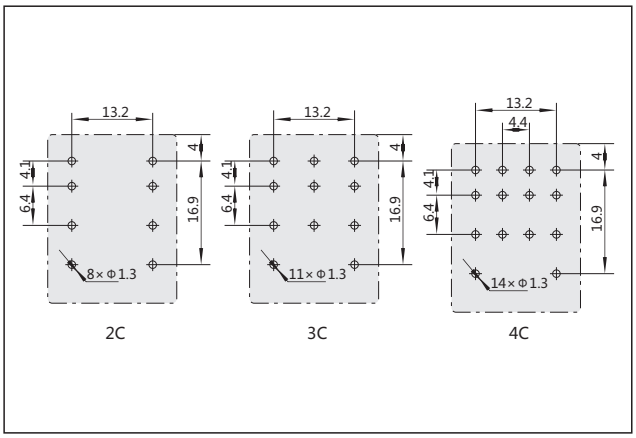

Dimensions

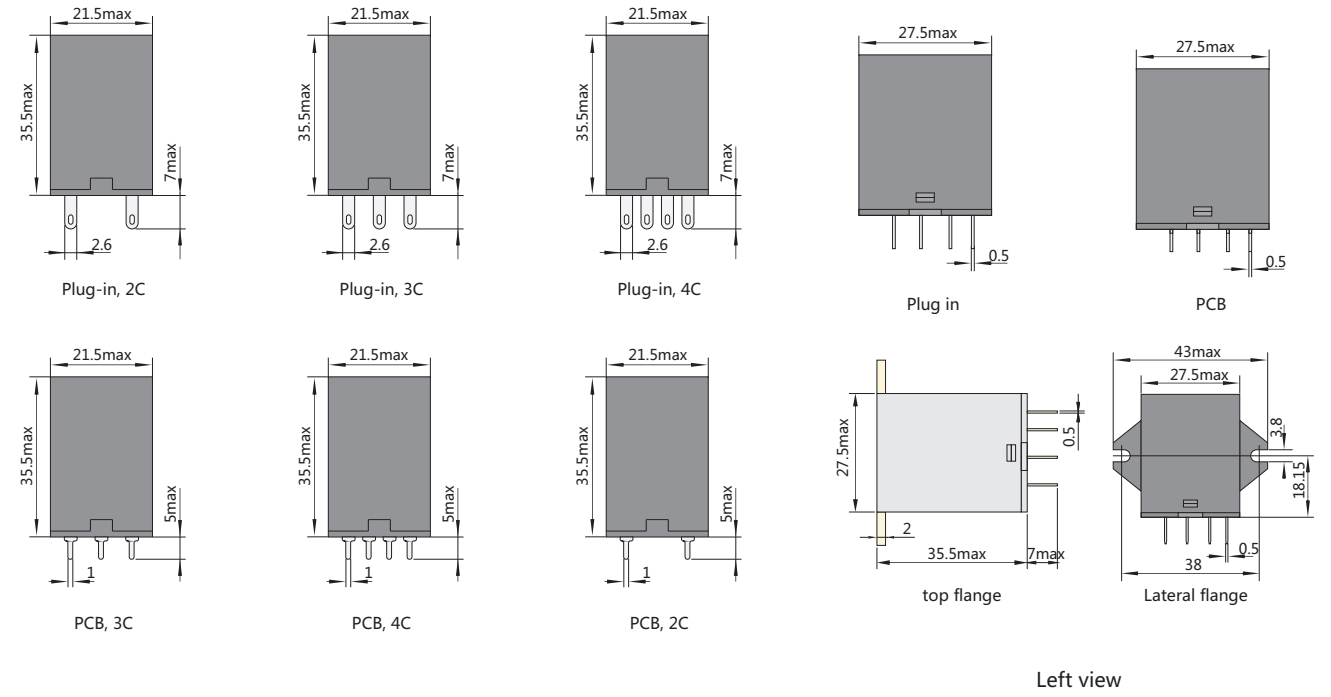

«Электро-Профи» - www.ep.ru

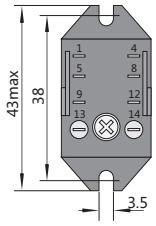

2C, front installation
(top flange)

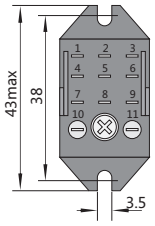

3C, front installation
(top flange)

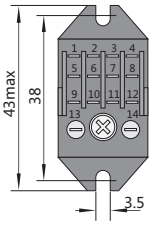

4C, front installation
(top flange)

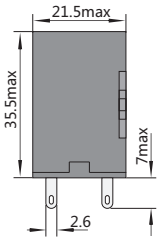

2C, lateral flange

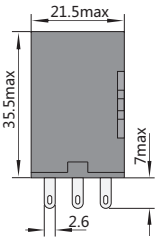

3C, lateral flange

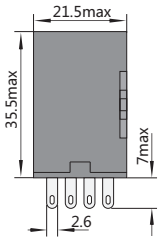

4C, lateral flange

G



NJDC-12
Small Electromagnetic Relay with Test Button

1. General

2Z, 3Z contacts form; contacts switching current up to 7.5A; complete AC and DC specifications; with test button functions, A wide range of device socket are available.

2. Operating conditions

Temperature Range	-10℃~+55℃
Relative humidity	+20℃ Reach 90%
Atmospheric pressure	86kPa~106kPa
Working position	Upright or side mounted (reed at the top)

3. Technical data

3.1 Contact parameters

Contact form	2Z(C),3Z (C)
Initial contact resistance	100mΩ
Contact Material	Silver alloy
Contact load (resistive)	7.5A/220VAC, 7.5A/28VDC
Maximum switching voltage	250VAC/125VDC
Maximum switching current	7.5A
Maximum switching power	1650VA 210W
Electrical life (times)	1×10^5 (See safety certification report)
Mechanical life (times)	1×10^7

CE

«Электро-Профи» - www.ep.ru

3.2 Performance and characteristic parameter

Insulation Resistance		100MΩ(500VDC)
Dielectric Strength	Contact and coil, between different sets of contacts	1500VAC
	Between open contacts	500VAC
Action time		≤20ms
Release time		≤20ms
Shock (stability)		Acceleration 100m/s^2, pulse duration of 11ms
Vibration		Double amplitude of 1 mm (10~ 55) Hz
Terminal form		Plug-in
Outside dimensions (mm)		35×35×52.5

3.3 Coil parameters

Rated power consumption	2W 3VA
Pull-in voltage	DC: ≤ 75% rated voltage; AC: ≤ 80% of rated voltage
Release voltage	DC: ≥ 10% rated voltage; AC: ≥ 20% of rated voltage
Maximum voltage	110% rated voltage

3.4 Specifications

Rated voltage VDC	Action voltage VDC (≤)	Release Voltage VDC (≥)	Coil resistance Ω ± 10%
6	4.5	0.6	22
12	9.0	1.2	80
24	18.0	2.4	360
36	27.0	3.6	840
48	36.0	4.8	1440
110	82.5	11.0	7560
220	165.0	22.0	29000

Rated voltage VAC	Action voltage VAC (≤)	Release Voltage VAC (≥)	Coil resistance (20 ℃) Ω ± 10%
6	4.8	1.2	7
12	9.6	2.4	19
24	19.2	4.8	80
48	38.4	9.6	400
110	88.0	22	1600
220	176.0	44	7300
380	304.0	76	21000

Note: The coil coil temperature parameter is value in 20℃.

4. Matching socket (optional)

Relay Model	NJDC-12/2Z	
Model of equipped socket	CZF08A	CZF08A-E
Socket Dimensions (mm)	52×41×21.5	52×41×21.5
Socket lead form	Screw-type terminals (device type, rail)	
Relay Mode	**NJDC-12/3Z**	
Model of equipped socket	CZF11A	CZF11A-E
Socket Dimensions (mm)	52×44×31	52×44×31
Socket lead forml	Screw-type terminals (device type, rail)	

«Электро-Профи» - www.ep.ru

5. Outside shape and mounting dimensions

Bottom wiring diagram (NJDC-12/2Z)

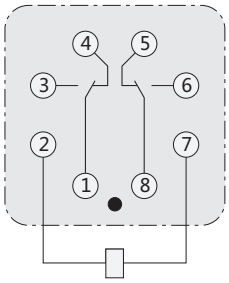

Bottom wiring diagram (NJDC-12/3Z)

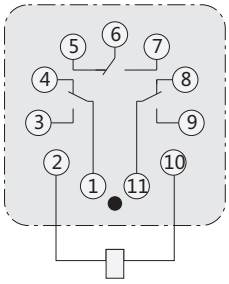

Outside dimensions drawing (NJDC-12/2Z)

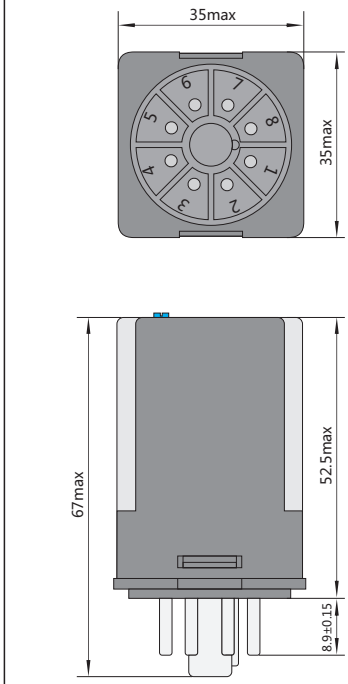

Outside dimensions drawing (NJDC-12/3Z)

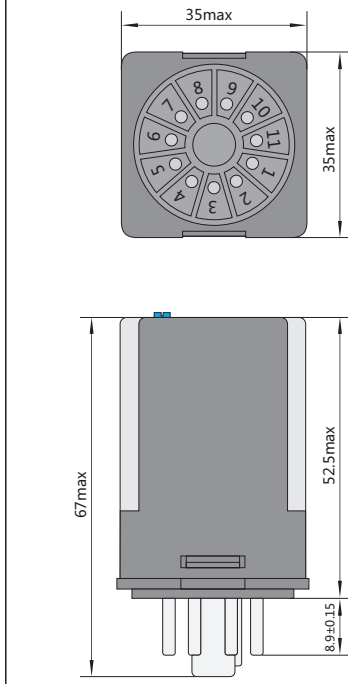

6. Ordering Information

NJDC-12	/	2Z	006	VDC
Relay Model		Contact form 2Z: two sets of conversion 3Z: three sets of conversion	Coil rated voltage DC (5 ~ 220) V AC (6 ~ 380) V	VAC: AC VDC: DC

«Электро-Профи» - www.ep.ru



JQX-10F Miniature Power Relay

1. General

1.1 10A switching current
1.2 Various sockets available
1.3 Wide range of coil ratings
1.4 Certificate: UL, CE

2. Type designation

JQX-10F / 006 - 2Z

- Contact arrangement: 2Z=2C; 3Z=3C
- Coil type: ~= AC; - = DC
- Coil voltage: DC: 6V~220V; AC: 6V~380V
- Series

3. Technical data

Contact Arrangement		2C, 3C
Initial contact resistance	mΩ	100
Contact material		Silver alloy
Rated load (resistive)		10A/220VAC, 10A/28VDC
Max. switching voltage	VAC	250
	VDC	125
Max. switching current	A	10
Max. switching power	VA	2200
	W	280
Electrical endurance	Cycles($\times 10^3$)	100
Machenical endurance	Cycles($\times 10^5$)	10

4. Coil specification

AC

Rated voltage	Holding voltage	Must drop-out voltage	Operating range	Power consumption
6	80%Un	20%Un	(80%~110%)Un	3VA
12				
24				
36				
48				
110				
127				
220				
230				
380				

DC

Rated voltage	Holding voltage	Must drop-out voltage	Operating range	Power consumption
5	75%Un	10%Un	(75%~110%)Un	2W
6				
12				
24				
36				
48				
110				
127				
220				

G

«Электро-Профи» - www.ep.ru

5. Characteristics

Insulation resistance(at 500VDC)		MΩ	100
Dielectric strength	Between coil & contacts		1500VAC
	Between open contacts		500VAC
Operation time		ms	≤20
Release time		ms	≤20
Shock resistance		m/s^2	100
Vibration			(10～55)Hz,1mm double amplitude
Humidity			98% RH at +20℃
Ambient temperature range		℃	-10～+55
Termination			Plug-in
Dimension		mm	35×35×52.5

6. Overall and mounting dimensions (mm)

Internal connection (bottom view)

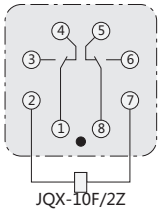

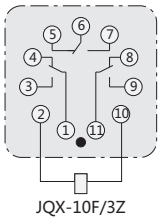

Dimensions

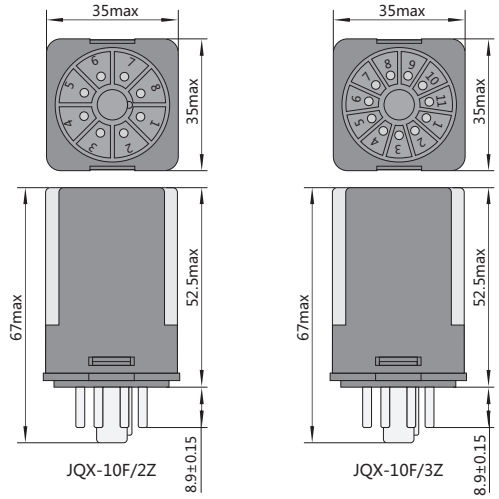

«Электро-Профи» - www.ep.ru



JTX Miniature Power Relay

1. General

1.1 10A switching current
1.2 Various sockets available
1.3 Wide range of coil ratings
1.4 Certificate: UL, CE

2. Type designation

JTX - 2C / 006 VDC

- Coil type: VDC/VAC
- Coil voltage: DC: 6V~220V; AC: 6V~380V
- Contact configuration: 2C; 3C
- Series

3. Technical data

Contact Arrangement		2C, 3C
Initial contact resistance	mΩ	100
Contact material		Silver alloy
Rated load (resistive)		10A/220VAC, 10A/28VDC
Max. switching voltage	VAC	250
	VDC	125
Max. switching current	A	10
Max. switching power	VA	2200
	W	280
Electrical endurance	Cycles($\times 10^3$)	100
Machenical endurance	Cycles($\times 10^5$)	10

4. Coil specification

AC

Rated voltage	Holding voltage	Must drop-out voltage	Operating range	Power consumption
6	80%Un	20%Un	(80%~110%)Un	3VA
12				
24				
36				
48				
110				
127				
220				
230				
380				

DC

Rated voltage	Holding voltage	Must drop-out voltage	Operating range	Power consumption
5	75%Un	10%Un	(75%~110%)Un	2W
6				
12				
24				
36				
48				
110				
127				
220				

G

«Электро-Профи» - www.ep.ru

5. Characteristics

Insulation resistance(at 500VDC)		MΩ	100
Dielectric strength	Between coil & contacts		1500VAC
	Between open contacts		500VAC
Operation time		ms	≤20
Release time		ms	≤20
Shock resistance		m/s^2	100
Vibration			(10～55)Hz,1mm double amplitude
Humidity			98% RH at +20℃
Ambient temperature range		℃	-10～+55
Termination			Plug-in
Dimension		mm	35×35×52.5

6. Overall and mounting dimensions (mm)

Internal connection (bottom view)

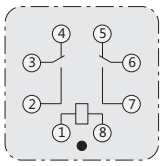

JTX-2C

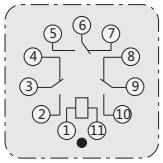

JTX-3C

Dimensions

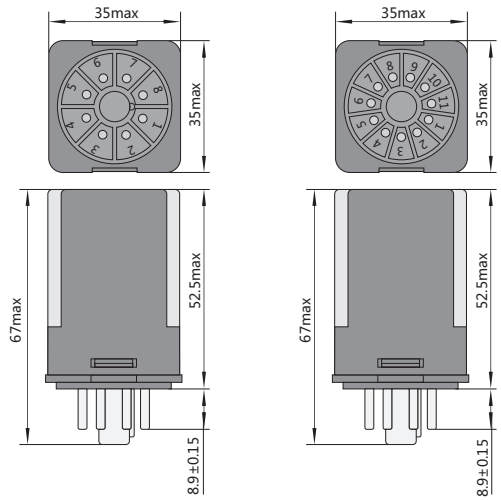

«Электро-Профи» - www.ep.ru



JMK Miniature Power Relay

1. General

1.1 10A switching current
1.2 With indicator to be selected
1.3 Full range of AC and DC coil
1.4 Certificate: UL, CE

2. Type designation

JMK 2P- I / 006 VDC

- VDC/VAC
- Coil voltage: DC: 6V~220V; AC: 6V~380V
- Contact configuration: 2P=2C; 3P=3C
- Series

3. Technical data

Contact Arrangement		2C, 3C
Initial contact resistance	mΩ	100
Contact material		Silver alloy
Rated load (resistive)		10A/220VAC, 10A/28VDC
Max. switching voltage	VAC	250
	VDC	125
Max. switching current	A	10
Max. switching power	VA	2200
	W	280
Electrical endurance	Cycles($\times 10^3$)	100
Machenical endurance	Cycles($\times 10^5$)	10

4. Coil specification

AC

Rated voltage	Holding voltage	Must drop-out voltage	Operating range	Power consumption
6	80%Un	20%Un	(80%~110%)Un	3VA
12				
24				
36				
48				
110				
127				
220				
230				
380				

DC

Rated voltage	Holding voltage	Must drop-out voltage	Operating range	Power consumption
5	75%Un	10%Un	(75%~110%)Un	2W
6				
12				
24				
36				
48				
110				
127				
220				

G

«Электро-Профи» - www.ep.ru

5. Characteristics

Insulation resistance(at 500VDC)		MΩ	100
Dielectric strength	Between coil & contacts		1500VAC
	Between open contacts		500VAC
Operation time		ms	≤20
Release time		ms	≤20
Shock resistance		m/s^2	100
Vibration			(10～55)Hz,1mm double amplitude
Humidity			98% RH at +20℃
Ambient temperature range		℃	-10～+55
Termination			Plug-in
Dimension		mm	35×35×52.5

6. Overall and mounting dimensions (mm)

Internal connection (bottom view)

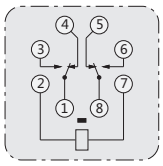

JMK2P- I

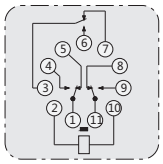

JMK3P- I

Dimensions

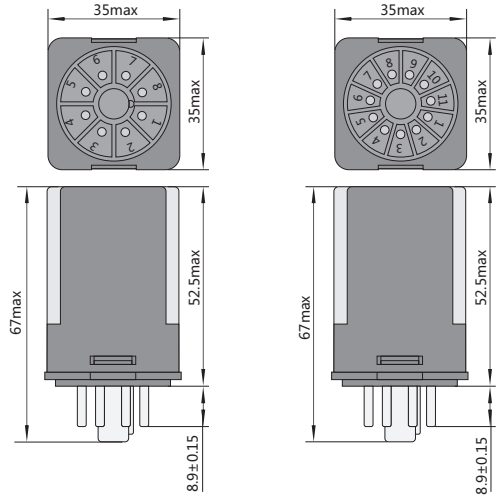

JMK2P- I JMK3P- I

«Электро-Профи» - www.ep.ru



NJX2 Miniature Electro-Magnetic Relay

1. General

2Z and 3Z contact forms; contact switching current up to 10A; complete AC and DC specifications; with test button functions; a wide range of device sockets are available;

G

«Электро-Профи» - www.ep.ru

2. Operating conditions

Temperature range	-40℃~+70℃
Relative humidity	+25℃~95%
Atmospheric pressure	86kPa~106kPa
Operating position	Upstanding or side mounting (The anchor is on the top)

3. Technical data

3.1 Contact parameters

Contact form	2 Z(C), 3Z(C)
Initial contact resistance	100mΩ
Contact material	Silver alloy
Contact load (resistive)	10A 250VAC/30VDC
Maximum switching voltage	250VAC/125VDC
Maximum switching current	10A
Maximum switching power	2500VA 300W
Electrical life (cycles)	1×10^5
Mechanical life (cycles)	1×10^7

3.2 Performance parameters

Insulation resistance		100MΩ(500VDC)
Dielectric strength	Between coil and contacts	1500VAC
	Between open contacts	500VAC
Action time		≤20ms
Release time		≤20ms
Shock (stability)		Acceleration 100m/s2 , pulse duration 11ms
Vibration		Double amplitude 1mm, (10~55)Hz
Terminal form		Plug-in type
Overall dimensions (mm)		35×35×53 (standard)
		35×35×55 (with mechanical latching)

3.3 Coil parameters

Rated power consumption	2W, 3VA
Pull-in voltage	DC: ≤80% rated voltage; AC: ≤80% rated voltage
Release voltage	DC: ≥10% rated voltage; AC: ≥20% rated voltage
Maximum voltage	110% rated voltage

3.4 Coil specification

Rated voltage VDC	Pull-in voltage VDC (≤)	Release voltage VDC(≥)	Coil resistance Ω
6	4.8	0.6	22×(1±10%)
12	9.6	1.2	80×(1±10%)
24	19.2	2.4	360×(1±10%)
48	38.4	4.8	1440×(1±15%)
110	88	11	7560×(1±15%)
220	176	22	29000×(1±15%)

Rated voltage VAC	Pull-in voltage VAC (≤)	Release voltage VAC(≥)	Coil resistance Ω /(20℃)
6	4.8	1.2	7×(1±10%)
12	9.6	2.4	19×(1±10%)
24	19.2	4.8	80×(1±10%)
36	28.8	7.2	200×(1±10%)
48	38.4	9.6	400×(1±10%)
110	88	22	1600×(1±15%)
220	176	44	7300×(1±15%)
380	304	76	21000×(1±15%)

«Электро-Профи» - www.ep.ru

4. Matching Sockets (optional)

Relay model	NJX2/2Z	NJX2/2Z2	NJX2/3Z	NJX2/3Z1	NJX2/3Z2
Matching socket model	CZF08A	CZF08A-E	CZF11A		CZF11A-E
Socket overall dimensions (mm)	52×41×21.5		52×44×31		
Socket lead form	Screw type terminal				

CZF08A



CZF08A-E



CZF11A



CZF11A-E



5 Outline and Installing Dimensions

2Z(standard)

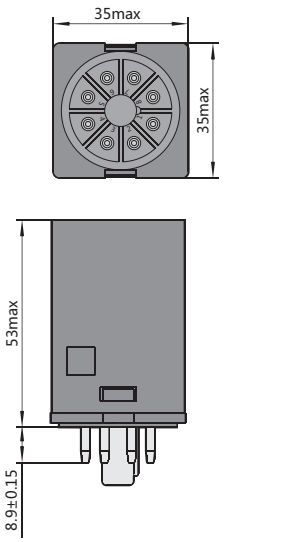

2Z(with mechanical latching)

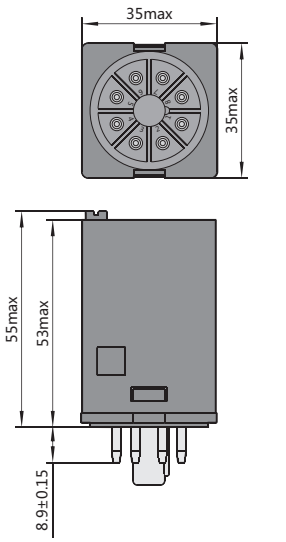

3Z(standard)

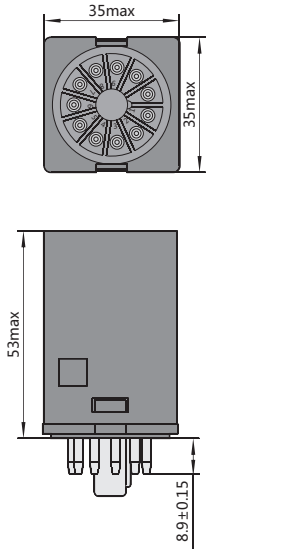

3Z(with mechanical latching)

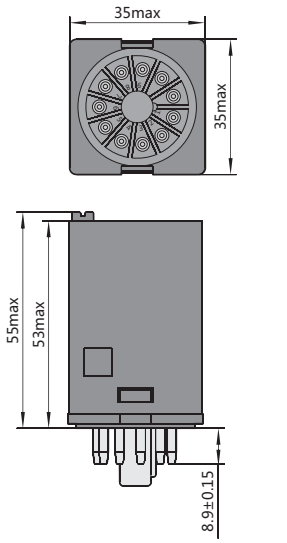

6. Connection Diagram

NJX2/2Z

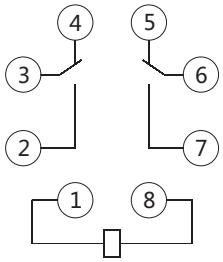

The same mode of connection as JTX-2C

NJX2/2Z2

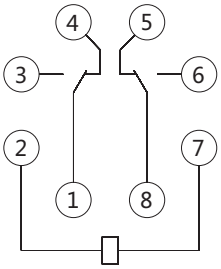

The same mode of connection as JQX-10F/2Z,JMK2P-I

NJX2/3Z

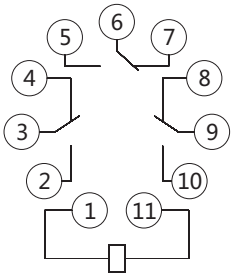

The same mode of connection as JTX-3C

NJX2/3Z1

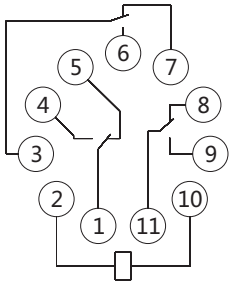

The same mode of connection as JMK3P-I

G

«Электро-Профи» - www.ep.ru

NJX2/3Z2

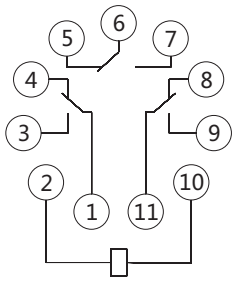

The same mode of connection as JQX-10F/3Z

NJX2/2Z(D)

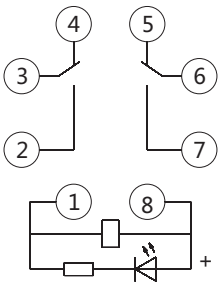

The same mode of connection as JTX-2C

NJX2/2Z2(D)

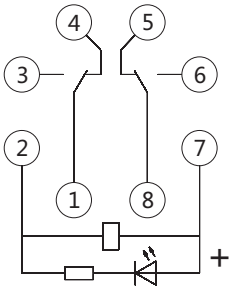

The same mode of connection as JQX-10F/2Z,JMK2P-I

NJX2/3Z(D)

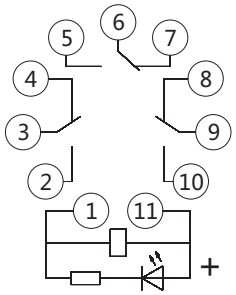

The same mode of connection as JTX-3C

NJX2/3Z1(D)

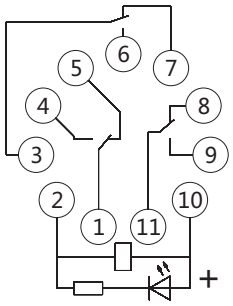

The same mode of connection as JMK3P-I

NJX2/3Z2(D)

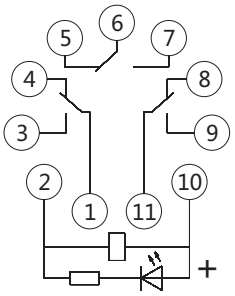

The same mode of connection as JQX-10F/3Z

7. Order Example

NJX2	/	3Z	1	(D)	AC220V
Relay model NJX2		Contact form 2Z: two change-over 3Z: three change-over	Leading-out terminal form none: standard mode of connection 1: special mode of connection 1 2: special mode of connection 2 (2Z no special mode of connection 1)	Function code none: standard (BS) : with mechanical latching function (D) : with energization indication function (J) : with mechanical indication function	Coil voltage AC6V DC6V AC12V DC12V AC24V DC24V AC36V DC48V AC48V DC110V AC110V DC220V AC220V AC380V

NJX2/2Z2(BS) (D) (J) AC220V means relay rated control coil voltage is AC220V, the contact form is 2Z change-over, the mode of connection of leading-out terminal is special mode of connection 2, with mechanical latching, energization indication and mechanical indication functions.

«Электро-Профи» - www.ep.ru



NJX3
Small-scale Electromagnetic Relay

1. Scope of application

1.1 Three contact forms, namely 1Z, 2Z and 3Z; it has the characteristics of small size, low power dissipation, big load capacity, and high reliability. It's extensively used in the HVAC industry for the control of industrial equipment such as condenser, compressor and air-conditioning. It needs no socket and realizes wire connection using quick-connect terminals, which is flexible and convenient.

1.2 Certificate: UL, CE.

2. Working conditions

Temperature Range	-45℃~+65℃
Relative humidity	Reaching 95% at +25℃
Atmospheric pressure	86kPa~106kPa
Service position	Optional

3. Major parameters and technical performance

3.1 Contact parameters

Contact form	1Z, 2Z, 3Z		
Initial contact resistance	100mΩ		
Contact material	Silver alloy		
Contact Ratings **Rated Voltage/ Rated Current**	**Electrical Operating Cycles**	**Load Type**	**Surrounding Air Temperature (SAT)/Ambient (℃)**
277VAC/15A	100000	Resistive	SAT 65
230VAC/1HP	6000	HP	SAT 65
600VAC/6.8A	6000	GP	SAT 65
28VDC/10A	100000	Resistive	SAT 65
Mechanical endurance	2 million times		

3.2 Performance and characteristic parameters

Insulation resistance	1000MΩ (500VDC)
Dielectric withstand voltage	Between contact coils: 2200VAC
	Between break contacts: 800VAC
Operate time	≤15ms
Release time	≤15ms
Shock (stability)	Acceleration 100m/s2 Pulse duration 11ms
Vibration	Double-amplitude 1mm, 10~55Hz
Leading-out terminal form	Quick-connect terminal
Overall dimension (mm)	64.3×34.5×57.2

3.3 Coil parameters

Pull-in voltage	≤85% rated voltage
Release voltage	≥20% rated voltage
Peak voltage	110% rated voltage

G

«Электро-Профи» - www.ep.ru

3.4 Specification & Parameter

Rated voltage VAC	Operate voltage ≤VAC	Release voltage ≥VAC	Coil resistance (20℃) Ω
24	20.4	4.8	42× (1±10%)

4. Overall and installation dimension

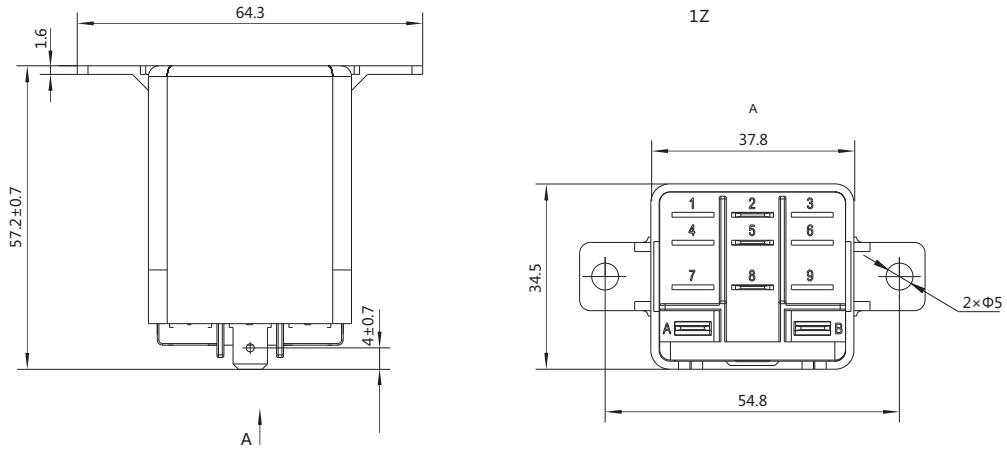

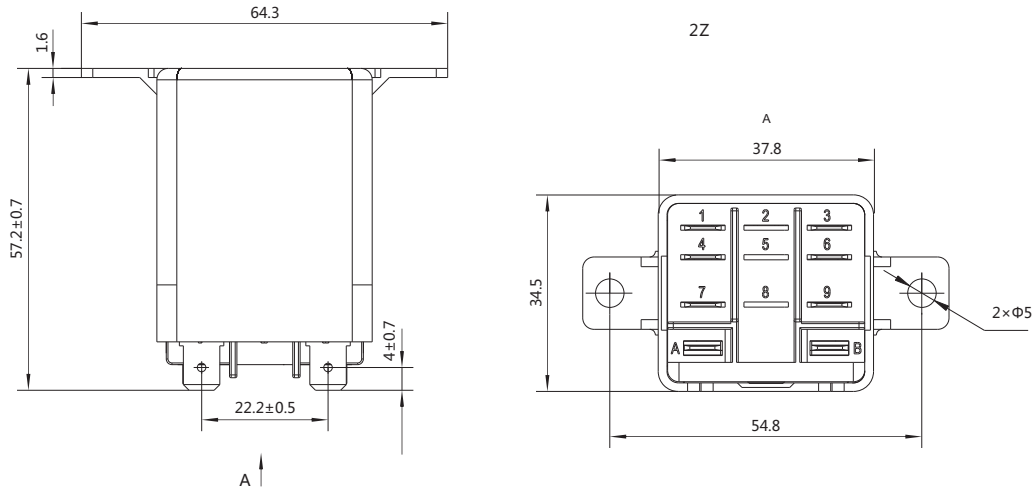

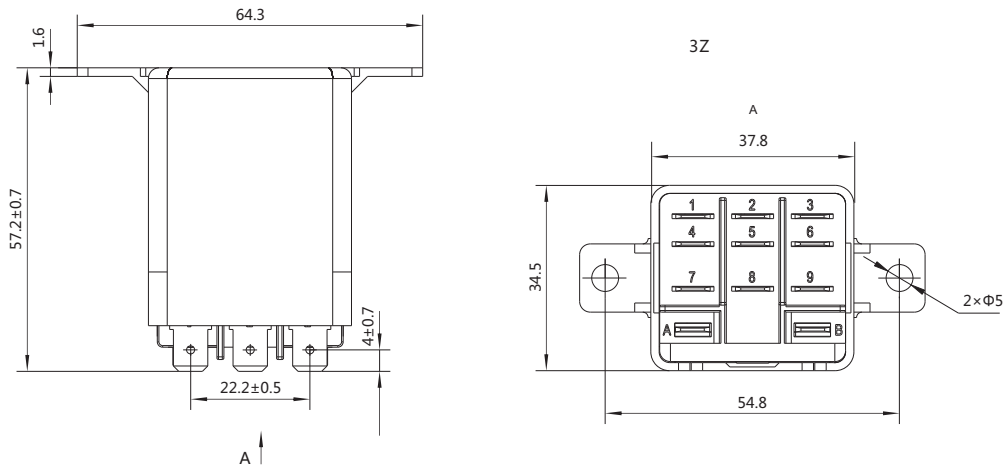

«Электро-Профи» - www.ep.ru

Socket

CZF08A	CZF08A-E(With finger safety protection)
	
52×41×21.5(mm)	52×41×21.5(mm)
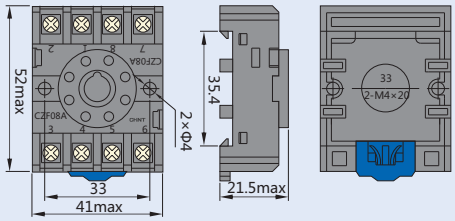	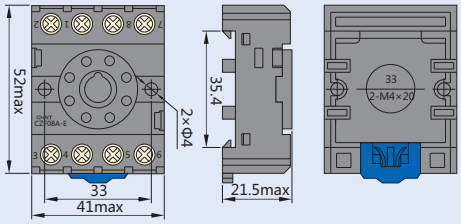
Applicable relay type: JQX-10F/2Z, JTX-2C, JMK2P-I	Applicable relay type: JQX-10F/2Z, JTX-2C, JMK2P-I

CZF11A	CZF11A-E(With finger safety protection)
	
52×44×31(mm)	52×44×31(mm)
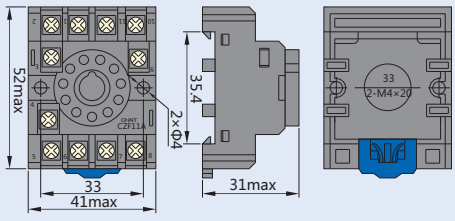	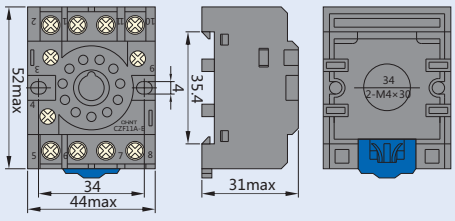
Applicable relay type: JQX-10F/3Z, JTX-3C, JMK3P-I	Applicable relay type: JQX-10F/3Z, JTX-3C, JMK3P-I

G

«Электро-Профи» - www.ep.ru

CZT08A-E(With finger safety protection)



79×29×33(mm)

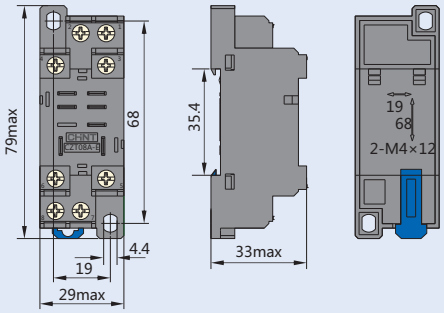

Applicable relay type: JQX-13F(B)/2Z,
NJX-13FW(B)/2Z, HH62P(-L), LY2(N)

CZT08B-01(Wide type, copper strip connection)



68×30×28(mm)

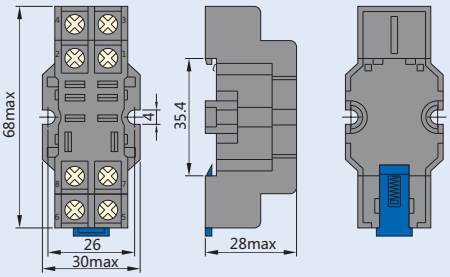

Applicable relay type: JQX-13F(B)/2Z,
NJX-13FW(B)/2Z, HH62P(-L), LY2(N)

CZY08A-E(With finger safety protection)



72×23×31(mm)

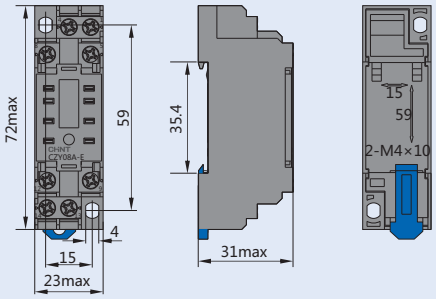

Applicable relay type: JZX-22F(B)/2Z,
NJX-13FW(B)/2ZS, HH52P(-L), MY2(N)

CZY11A-E(With finger safety protection)



72×30×31(mm)

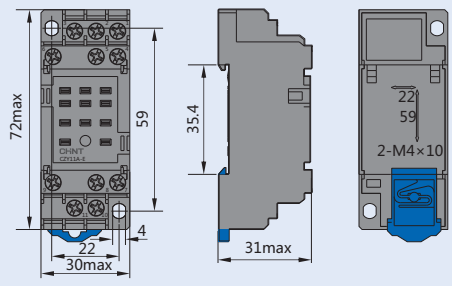

Applicable relay type:JZX-22F(B)/3Z, NJX-13FW(B)/3ZS,
HH53P(L),MY3(N)

«Электро-Профи» - www.ep.ru

CZY14A-E(With finger safety protection)



72×30×31(mm)

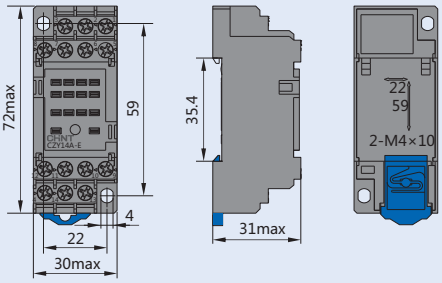

Applicable relay type:JZX-22F(B)/4Z, NJX-13FW(B)/4ZS, HH54P(L),MY4(N)

CZY08B-01(Wide type, copper strip connection)



63×30.5×26(mm)

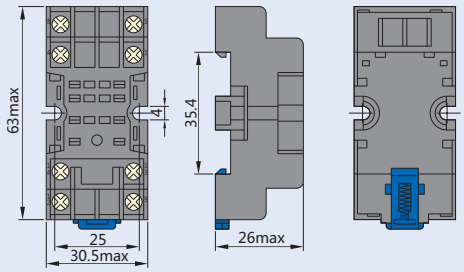

Applicable relay type:JZX-22F(B)/2Z, NJX-13FW(B)/2ZS, JZX-18F(L)/2Z, HH52P(L),MY2(N)

CZY11B (Copper strip connection)



63×30.5×26(mm)

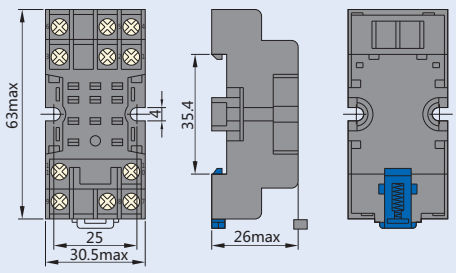

Applicable relay type: JZX-22F(B)/3Z, NJX-13FW(B)/3ZS, HH53P(L), MY3(N)

CZY14B (Copper strip connection)



63×30.5×26(mm)

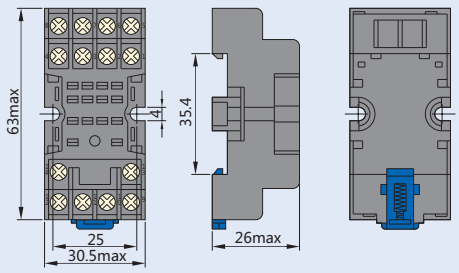

Applicable relay type: JZX-22F(B)/4Z, NJX-13FW(B)/4ZS, HH54P(L), JZX-18F(L)/4Z, MY4(N)

G

«Электро-Профи» - www.ep.ru

CZY14B-E (With finger safety protection, copper strip connection)



63×30.5×26(mm)

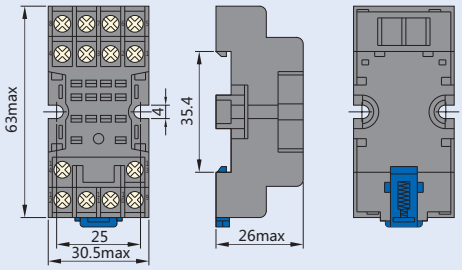

Applicable relay type: JZX-22F(B)/4Z, NJX-13FW(B)/4ZS,HH54P(L), JZX-18F(L)/4Z, MY4(N)

NG102



Applicable relay type: CZY□A series、CZT□A series

NG103



Applicable relay type: CZY□B series、CZT□B series

«Электро-Профи» - www.ep.ru



NJMC1 Pulse Relay

1. General

Contact switching current of up to 16A and 32A; a complete range of AC/DC specifications; NJMC1 pulse relay is a mechanical bistable relay that changes the contact state by inputting pulse signals.

2. Type designation

N JMC 1 - □ / □ □

- Coil rated voltage : AC:(12~380)V; DC: (6~220)V.
- Number of poles: 1P,2P,3P,4P
- Contact capacity: 16:16A 32:32A
- Design sequence No.
- Pulse relay
- Company code

3. Normal operating conditions and mounting conditions

Temperature range	-25℃~+55℃
Pollution degree	1
Mounting position	Any
Environmental protection category	Dustproof type
Overvoltage category	Ⅱ

4. Technical data

4.1 Contact data

Contact form	1P, 2P, 3P, 4P	
Contact material	Silver alloy	
Contact load (resistive)	NJMC1-16:16A	NJMC1-32:32A
	250VC/28VDC	250VC/28VDC
Max. switching voltage	250VAC/125VDC	
Max. switching current	NJMC1-16:16A	NJMC1-32:32A
Max. switching power	NJMC1-16:4000VA 448W	NJMC1-32:8000VA 896W
Electrical life (times)	1×10^5	
Mechanical life (times)	1×10^6	

4.2 Specification data

Coil rated voltage VDC	Coil resistance (20℃)Ω ±10%
6	5
12	19
24	75
48	300
110	1600
127	2100
220	6031

Coil rated voltage VAC	Coil resistance (20℃)Ω ±10%
12	5.5
24	23.5
48	100
130	700
220	2000
230	2185
240	2380
380	6000

G

CE

«Электро-Профи» - www.ep.ru

4.3 Characteristics data

Insulation resistance	**100MΩ(500VDC)**	
Dielectric strength	Between contact & coil	1500VAC
	Between open contacts	1500VAC
Shock (resistance)	Acceleration: 100m/s^2, pulse duration: 11ms	
Vibration	1mm double amplitude, (10~55)Hz	
Mounting type	Rail type	
Overall dimensions (mm)	86×70	

4.4 Coil data

Pulse voltage duration	**≥50ms (200ms is recommended)**
Voltage range	(85%~110%)Un

5. Overall and mounting dimensions (mm)

NJMC1-16/4P

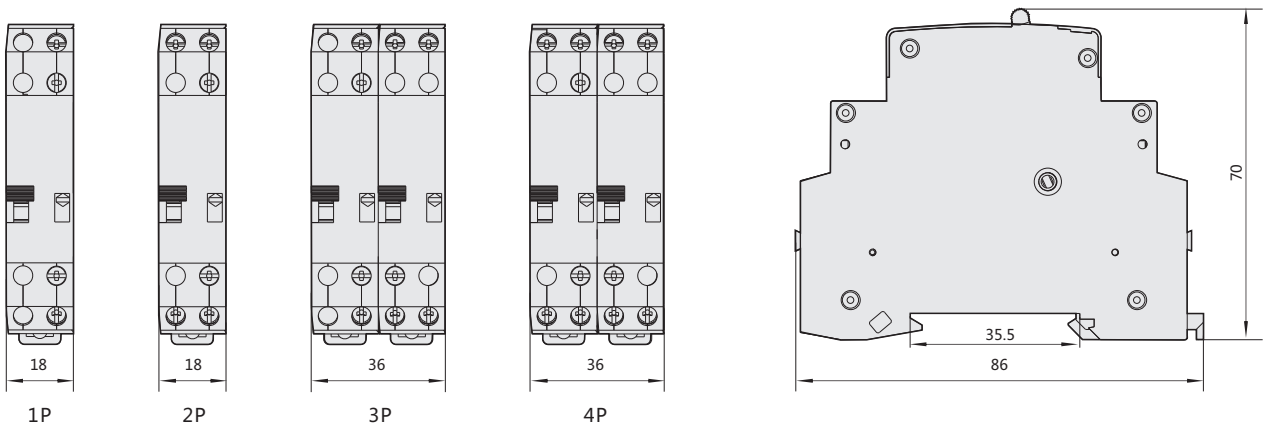

NJMC1-32/2P

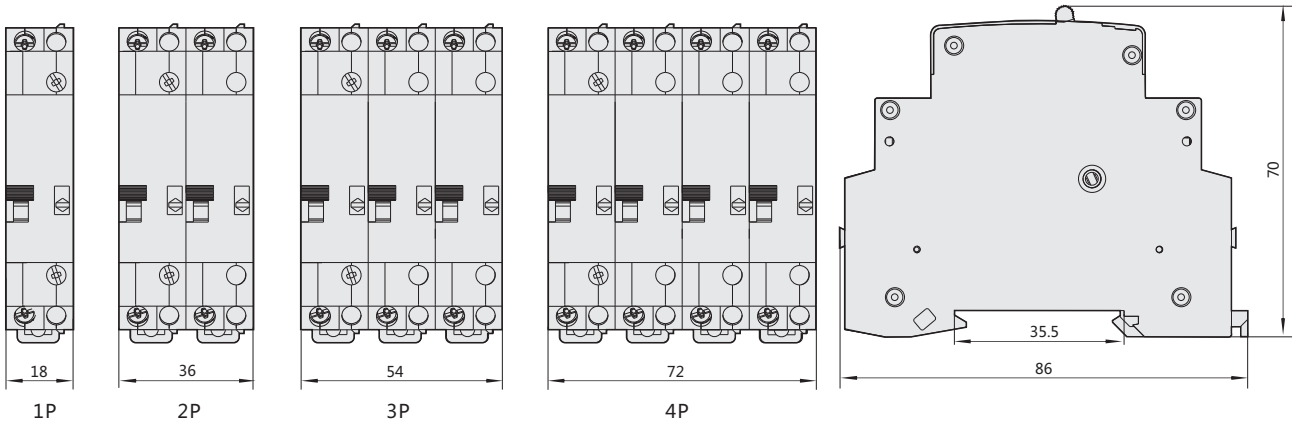

«Электро-Профи» - www.ep.ru

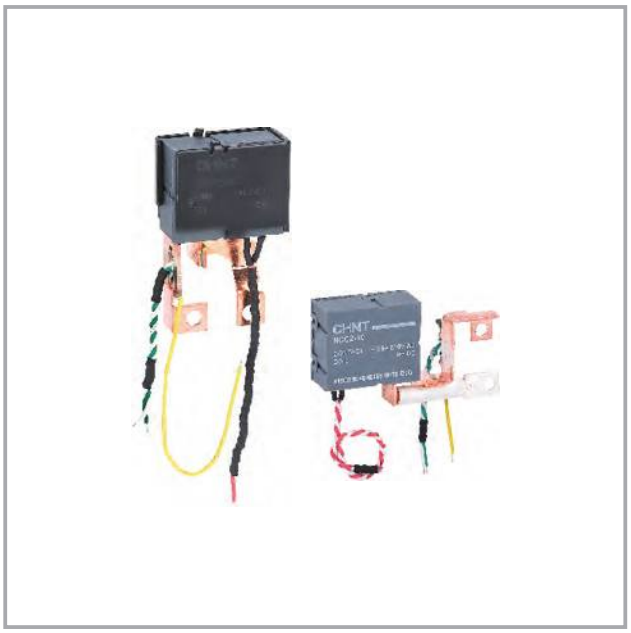

NCC2
Magnetic Latching Relay

1. Scope of application

1H, 1D contact form; the contact switching current can reach 90A; used in telecontrol, telemetry, communication, automatic control, electromechanical integration and power and electronic equipment, in particular in electronic watt-hour meter; applicable standards: GB/T 21711.1, JB/T 10923, IEC 61810-1.

«Электро-Профи» - www.ep.ru

2. Normal working conditions and installation conditions

Temperature Range	-40°C~+70°C
Relative humidity	+20°C, reaching 95%
Atmospheric pressure	86kPa~106kPa
Service position	Optional

3. Major parameters and technical performance

3.1 Contact parameters

Contact form	1H (A), 1D (B)
Initial contact resistance	≤1mΩ
Contact material	Silver alloy
Contact load (resistive)	90A/250VAC
Maximum switching voltage	250VAC
Maximum switching current	90A
Maximum switching power	22500VA
Electrical endurance (times)	6×10^3
Mechanical endurance (times)	3×10^5

3.2 Performance and characteristic parameters

Insulation resistance		1000MΩ (500VDC)
Dielectric withstand voltage	Between contact coils	4000VAC
	Between break contacts	1500VAC
Operate time		≤20ms
Release time		≤20ms
Shock (stability)		Peak acceleration 150m/s2, pulse duration 11ms
Vibration		60Hzuniform amplitude 0.075mm , 10~150Hz
Leading-out terminal form		Printed panel
Overall dimension (mm)		NCC2-80:43x34x22, NCC2-90:39x32x18

3.3 Coil parameters

Rated dissipation	One coil: 1.5W; double coil: 3W
Operate voltage	≤80%rated voltage
Operate time	≤20ms
Recommended pulsed voltage width	(100∽300) ms

«Электро-Профи» - www.ep.ru

3.4 Specification & Parameter

One coil

Rated voltage VDC	Action voltage VDC (≤)	Coil resistance (20 ℃) Ω ± 10%
5	4	16.6
6	4.8	24
9	7.2	54
12	9.6	96
24	19.2	384
48	38.4	1536

Double coil

Rated voltage VDC	Action voltage VDC (≤)	Coil resistance (20 ℃) Ω ± 10%
5	4	2x8.3
6	4.8	2x12
9	7.2	2x27
12	9.6	2x48
24	19.2	2x192
48	38.4	2x768

4. Overall and installation dimension

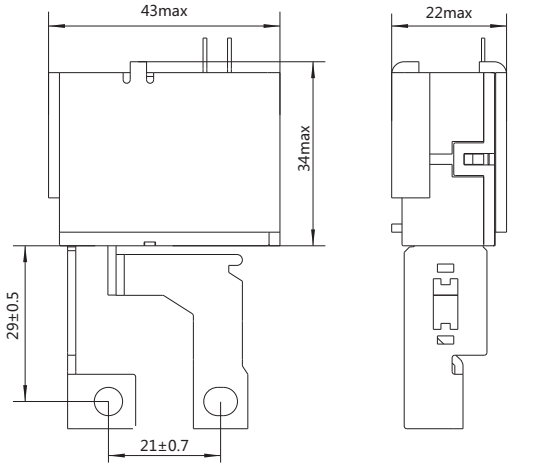

NCC2-80

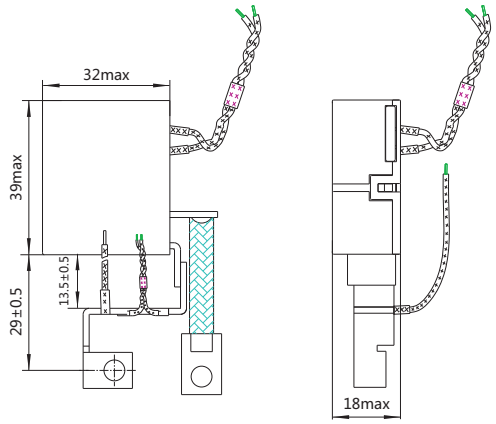

NCC2-90

Note: The overall dimension can be decided according to the actual requirements of customers.

5. Ordering instructions

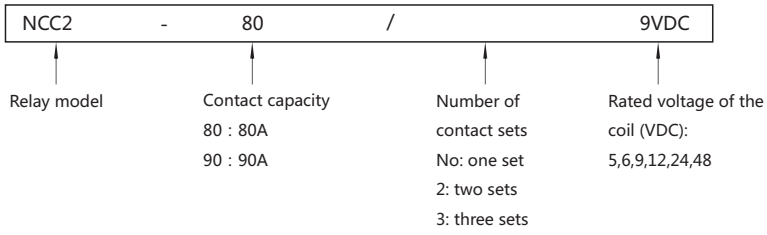

«Электро-Профи» - www.ep.ru

LV Capacitor

Safe and reliable, easy to use



«Электро-Профи» - www.ep.ru



«Электро-Профи» - www.ep.ru

LV Capacitor

Self-heating Shunt Capacitor



BZMJ

Page P-001



BKMJ

Page P-004



NWC1

Page P-009



NWC5

Page P-014



NWC6

Page P-017

Intelligent Reactive Power Compensation Controller



JKF8

Page P-021



NWK1-GR

Page P-024

«Электро-Профи» - www.ep.ru



BZMJ Self-healing Shunt Capacitor

1. General

1.1 Electric ratings: ≤AC1000V;

1.2 Application: For improvement of power factor and power quality;

1.3 Standards: IEC/EN 60831-1:2014 IEC/EN 60831-2:2014.

2. Type designation

B Z M J □-□-□

- Number of phase
- Rated capacity (kvar)
- Rated voltage (kV)
- Capacitor series

3. Operating conditions

3.1 Ambient temperature: -25℃~+50℃

3.2 Relative humidity: ≤50% at 40℃, ≤90% at 20℃

3.3 Altitude: ≤2000m

3.4 Environmental conditions:
without dangerous gas & steam,insulated and explosive dustand dramatic mechanical vibration.

4. Technical data

4.1 Rated voltage: AC(0.23~1.0)kV;

4.2 Rated frequency: 50Hz or 60Hz;

4.3 Rated capacity: 1~60Kvar;

4.4 Capacity error: -5~+10%;

4.5 Dielectric loss tangent value:
≤30kvar tgs≤0.0012
> 30kvar tgs≤0.0015
at rated power frequecy voltage;

4.6 Max. Allowed over-voltage: 1.1Un;

4.7 Max. Allowed over-current: 1.3In (1.6 In, 2h/24h; 2.0 In, 30min/24h);

4.8 Having Self-discharging property: power off, voltage reduces from 2 Un to 75V and below within 3min;

4.9 Specific data;

4.10 Inrush current: 200In;

4.11 Withstand voltage: interelectrode, power frequency 2.15UN, 10s;

4.12 Withstand voltage: pole-to-case, power frequency 3.6kV, 60s;

4.13 Losses : ≤0.3W/kvar.

«Электро-Профи» - www.ep.ru

Main product models and data sheet

Serial number	Type and Specification	Rated voltage (kV)	Rated capacity (kvar)	Rated frequency (Hz)	Rated capacitor (μF)	Rated current (A)	Enclosure height (mm)	Figure
1	BZMJ 0.23-5-3	0.23	5	50	301	12.5	140	Fig.1
2	BZMJ 0.23-6-3	0.23	6	50	361	15.1	190	Fig.1
3	BZMJ 0.23-7.5-3	0.23	7.5	50	451	18.8	190	Fig.1
4	BZMJ 0.23-10-3	0.23	10	50	602	25.1	195	Fig.2
5	BZMJ 0.23-12-3	0.23	12	50	722	30.1	220	Fig.2
6	BZMJ 0.23-15-3	0.23	15	50	903	37.7	250	Fig.2
7	BZMJ 0.23-20-3	0.23	20	50	1203	50.2	295	Fig.2
8	BZMJ 0.23-30-3	0.23	30	50	1805	75.3	315	Fig.3
9	BZMJ 0.4-3-3	0.4	3	50	60	4.3	95	Fig.1
10	BZMJ 0.4-5-3	0.4	5	50	99	7.2	95	Fig.1
11	BZMJ 0.4-6-3	0.4	6	50	119	8.7	120	Fig.1
12	BZMJ 0.4-7.5-3	0.4	7.5	50	149	10.8	120	Fig.1
13	BZMJ 0.4-8-3	0.4	8	50	159	11.5	120	Fig.1
14	BZMJ 0.4-10-3	0.4	10	50	199	14.4	140	Fig.1
15	BZMJ 0.4-12-3	0.4	12	50	239	17.3	190	Fig.1
16	BZMJ 0.4-14-3	0.4	14	50	279	20.2	190	Fig.1
17	BZMJ 0.4-15-3	0.4	15	50	298	21.7	190	Fig.1
18	BZMJ 0.4-16-3	0.4	16	50	318	23.1	190	Fig.1
19	BZMJ 0.4-18-3	0.4	18	50	358	26.0	220	Fig.1
20	BZMJ 0.4-20-3	0.4	20	50	398	28.9	220	Fig.1
21	BZMJ 0.4-25-3	0.4	25	50	497	36.1	220	Fig.2
22	BZMJ 0.4-30-3	0.4	30	50	597	43.3	250	Fig.2
23	BZMJ 0.4-40-3	0.4	40	50	796	57.7	250	Fig.3
24	BZMJ 0.4-50-3	0.4	50	50	995	72.2	315	Fig.3
25	BZMJ 0.4-60-3	0.4	60	50	1194	86.6	315	Fig.3
26	BZMJ 0.45-3-3	0.45	3	50	47	3.8	120	Fig.1
27	BZMJ 0.45-5-3	0.45	5	50	79	6.4	120	Fig.1
28	BZMJ 0.45-6-3	0.45	6	50	94	7.7	120	Fig.1
29	BZMJ 0.45-7.5-3	0.45	7.5	50	118	9.6	120	Fig.1
30	BZMJ 0.45-8-3	0.45	8	50	126	10.3	120	Fig.1
31	BZMJ 0.45-10-3	0.45	10	50	157	12.8	140	Fig.1
32	BZMJ 0.45-12-3	0.45	12	50	189	15.4	190	Fig.1
33	BZMJ 0.45-14-3	0.45	14	50	220	18.0	190	Fig.1
34	BZMJ 0.45-15-3	0.45	15	50	236	19.2	190	Fig.1
35	BZMJ 0.45-16-3	0.45	16	50	252	20.5	190	Fig.1
36	BZMJ 0.45-18-3	0.45	18	50	283	23.1	220	Fig.1
37	BZMJ 0.45-20-3	0.45	20	50	314	25.7	220	Fig.1
38	BZMJ 0.45-25-3	0.45	25	50	393	32.1	220	Fig.2
39	BZMJ 0.45-30-3	0.45	30	50	472	38.5	250	Fig.2
40	BZMJ 0.45-40-3	0.45	40	50	629	51.3	250	Fig.3
41	BZMJ 0.45-50-3	0.45	50	50	786	64.2	315	Fig.3
42	BZMJ 0.45-60-3	0.45	60	50	943	77.0	315	Fig.3
43	BZMJ 0.525-5-3	0.525	5	50	58	5.5	120	Fig.1
44	BZMJ 0.525-10-3	0.525	10	50	115	11.0	140	Fig.1
45	BZMJ 0.525-15-3	0.525	15	50	173	16.5	190	Fig.1
46	BZMJ 0.525-20-3	0.525	20	50	231	22.0	220	Fig.1
47	BZMJ 0.525-25-3	0.525	25	50	289	27.5	220	Fig.2
48	BZMJ 0.525-30-3	0.525	30	50	346	33.0	250	Fig.2
49	BZMJ 0.525-40-3	0.525	40	50	462	44.0	250	Fig.3
50	BZMJ 0.525-50-3	0.525	50	50	577	55.0	315	Fig.3
51	BZMJ 0.525-60-3	0.525	60	50	693	66.0	315	Fig.3

«Электро-Профи» - www.ep.ru

Serial number	Type and Specification	Rated voltage (kV)	Rated capacity (kvar)	Rated frequency (Hz)	Rated capacitor (μF)	Rated current (A)	Enclosure height (mm)	Figure
52	BZMJ 0.69-5-3	0.69	5	50	33	4.2	95	Fig.1
53	BZMJ 0.69-10-3	0.69	10	50	67	8.4	140	Fig.1
54	BZMJ 0.69-15-3	0.69	15	50	100	12.6	190	Fig.1
55	BZMJ 0.69-20-3	0.69	20	50	134	16.7	220	Fig.1
56	BZMJ 0.69-25-3	0.69	25	50	167	20.9	220	Fig.2
57	BZMJ 0.69-30-3	0.69	30	50	201	25.1	250	Fig.2
58	BZMJ 0.69-40-3	0.69	40	50	267	33.5	250	Fig.3
59	BZMJ 0.69-50-3	0.69	50	50	334	41.8	315	Fig.3
60	BZMJ 0.69-60-3	0.69	60	50	401	50.2	315	Fig.3
61	BZMJ 1.14-10-3	1.14	10	50	25	5.1	220	Fig.1
62	BZMJ 1.14-15-3	1.14	15	50	37	7.6	250	Fig.2
63	BZMJ 0.4-7.5-3YN	0.4	7.5	50	149	10.8	195	Fig.2*
64	BZMJ 0.4-10-3YN	0.4	10	50	199	14.4	195	Fig.2*
65	BZMJ 0.4-15-3YN	0.4	15	50	298	21.7	250	Fig.2*
66	BZMJ 0.4-20-3YN	0.4	20	50	398	28.9	295	Fig.2*

Note: The specifications marked with " * " are used for compensating the individual phase,the bigger one of the four terminals should be connected to the neutral line.

5. Features

5.1 Compact design and reliable quality thanks to advanced technology and excellent imported material;
5.2 Available for use in places with higher ambient temperature and voltage variation;
5.3 Having good sealing properties; amd outgoing terminals for convenient wiring and reliable connection;
5.4 Fixed type, convenient for mounting and elegant appearance due to novel mounting pins;
5.5 No painting thanks to coated metal Enclosure used.

6. Note

6.1 Please guarantee that the capacitors are operated under specified conditions,including the proper temperature, voltage and current, as over-voltage and over-current may shorten the life of the capacitor;
6.2 Please pay attention to the points following when the capacitor is shuntly connected in the system
a. For the system of current regulating system and the electric equipments system, the capacitor should not be directly connected;
b. Operational current of the capacitor should be less than the off-load current of the shuntly connected motor;
c. When the transformer is off-load,the capacitor should stop operating.
6.3 Specific switches, contactors and over-current relays should be adopted when the capacitor is shuntly connected in the system.

7. Mounting dimensions (mm)

Figure 1

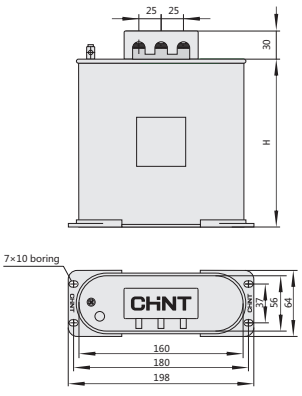

Figure 2

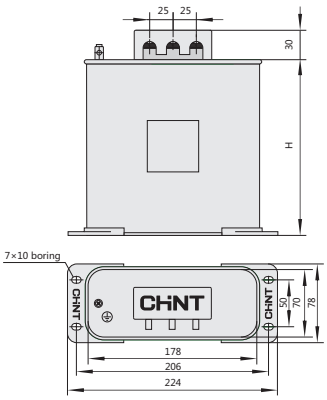

Figure 3

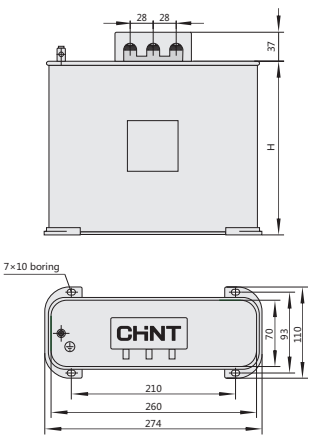

«Электро-Профи» - www.ep.ru



BKMJ Dry Type Low-voltage Shunt Capacitor

1. Scope of Application

BKMJ dry type low-voltage shunt capacitor is applied in nominal voltage 1000V and below power frequency AC power system for the purpose of raising the power factor, reducing the line loss and improving the voltage quality. Filled with dry type flame retardant material; it is safe and reliable with small product size and convenient installation.

Executed standard: IEC/EN 60831-1:2014 IEC/EN 60831-2:2014.

2. Type designation

B K M J □-□-□

- Number of phase
- Rated capacity (kvar)
- Rated voltage (kV)
- Medium code (metalized polypropylene film)
- Filling material code (K-dry type flame retardant material)
- Serial code (B means shunt capacitor)

Note: The split phase compensation capacitor model is the product with suffix YN. For example, BKMJ 0.4-15-3YN means the line voltage is 400V, three-phase aggregate capacity is 15kvar, and the product inside is of star connection, zero conductor N is led out.

3. Operating conditions

3.1 Ambient air temperature: -25℃~+50℃ (-25/C), -40℃~+55℃ customizable;

3.2 Relative humidity: ≤50% at 40℃; ≤90% at 20℃;

3.3 Altitude:≤2000m. When it is higher than 2000m, please increase the capacitor’ s rated voltage for derating use, and increase the mounting spacing and do well ventilation and heat emission;

3.4 Ambient conditions: no harmful gas and steam, no conductive or explosive dust, no violent mechanical vibration.

4. Main Technical Parameters and Technical Performance

4.1 Main technical parameters

H

«Электро-Профи» - www.ep.ru

Main product models and data sheet

Serial number	Type and Specification	Rated voltage (kV)	Rated capacity (kvar)	Rated frequency (Hz)	Rated capacitor (μF)	Rated current (A)	Enclosure height (mm)	Figure
1	BKMJ 0.4-3-3	0.4	3	50	60	4.3	95	Fig.1
2	BKMJ 0.4-5-3	0.4	5	50	99	7.2	95	Fig.1
3	BKMJ 0.4-7.5-3	0.4	7.5	50	149	10.8	120	Fig.1
4	BKMJ 0.4-10-3	0.4	10	50	199	14.4	140	Fig.1
5	BKMJ 0.4-15-3	0.4	15	50	298	21.7	190	Fig.1
6	BKMJ 0.4-16-3	0.4	16	50	318	23.1	190	Fig.1
7	BKMJ 0.4-20-3	0.4	20	50	398	28.9	220	Fig.1
8	BKMJ 0.4-25-3	0.4	25	50	497	36.1	220	Fig.2
9	BKMJ 0.4-30-3	0.4	30	50	597	43.3	250	Fig.2
10	BKMJ 0.4-40-3	0.4	40	50	796	57.7	250	Fig.3
11	BKMJ 0.4-50-3	0.4	50	50	995	72.7	315	Fig.3
12	BKMJ 0.4-60-3	0.4	60	50	1194	86.6	315	Fig.3
13	BKMJ 0.45-3-3	0.45	3	50	47	3.8	95	Fig.1
14	BKMJ 0.45-5-3	0.45	5	50	79	6.4	95	Fig.1
15	BKMJ 0.45-7.5-3	0.45	7.5	50	118	9.6	120	Fig.1
16	BKMJ 0.45-10-3	0.45	10	50	157	12.8	140	Fig.1
17	BKMJ 0.45-15-3	0.45	15	50	236	19.2	190	Fig.1
18	BKMJ 0.45-16-3	0.45	16	50	252	20.5	190	Fig.1
19	BKMJ 0.45-20-3	0.45	20	50	314	25.7	220	Fig.1
20	BKMJ 0.45-25-3	0.45	25	50	393	32.1	220	Fig.2
21	BKMJ 0.45-30-3	0.45	30	50	472	38.5	250	Fig.2
22	BKMJ 0.45-40-3	0.45	40	50	629	51.3	250	Fig.3
23	BKMJ 0.45-50-3	0.45	50	50	786	64.2	315	Fig.3
24	BKMJ 0.45-60-3	0.45	60	50	943	77.0	315	Fig.3
25	BKMJ 0.525-3-3	0.525	3	50	35	3.3	95	Fig.1
26	BKMJ 0.525-5-3	0.525	5	50	58	5.5	95	Fig.1
27	BKMJ 0.525-7.5-3	0.525	7.5	50	87	8.2	120	Fig.1
28	BKMJ 0.525-10-3	0.525	10	50	115	11.0	140	Fig.1
29	BKMJ 0.525-15-3	0.525	15	50	173	16.5	190	Fig.1
30	BKMJ 0.525-16-3	0.525	16	50	185	17.6	190	Fig.1
31	BKMJ 0.525-20-3	0.525	20	50	231	22.0	220	Fig.1
32	BKMJ 0.525-25-3	0.525	25	50	289	27.5	220	Fig.2
33	BKMJ 0.525-30-3	0.525	30	50	346	33.0	250	Fig.2
34	BKMJ 0.525-40-3	0.525	40	50	462	44.0	250	Fig.3
35	BKMJ 0.525-50-3	0.525	50	50	577	55.0	315	Fig.3
36	BKMJ 0.525-60-3	0.525	60	50	693	66.0	315	Fig.3
37	BKMJ 0.69-5-3	0.69	5	50	33	4.2	95	Fig.1
38	BKMJ 0.69-7.5-3	0.69	7.5	50	50	6.3	120	Fig.1
39	BKMJ 0.69-10-3	0.69	10	50	67	8.4	140	Fig.1
40	BKMJ 0.69-15-3	0.69	15	50	100	12.6	190	Fig.1
41	BKMJ 0.69-20-3	0.69	20	50	134	16.7	220	Fig.1
42	BKMJ 0.69-25-3	0.69	25	50	167	20.9	220	Fig.2
43	BKMJ 0.69-30-3	0.69	30	50	201	25.1	250	Fig.2
44	BKMJ 0.69-40-3	0.69	40	50	267	33.5	250	Fig.3
45	BKMJ 0.69-50-3	0.69	50	50	334	41.8	315	Fig.3
46	BKMJ 0.69-60-3	0.69	60	50	401	50.2	315	Fig.3
47	BKMJ 1.20-10-3	1.20	10	50	22	4.8	190	Fig.1
48	BKMJ 1.20-15-3	1.20	15	50	33	7.2	250	Fig.2
49	BKMJ 1.20-20-3	1.20	20	50	44	9.6	250	Fig.2
50	BKMJ 1.20-30-3	1.20	30	50	66	14.4	315	Fig.3
51	BKMJ 1.20-40-3	1.20	40	50	88	19.2	315	Fig.3
52	BKMJ 0.4-5-3YN	0.4	5	50	99	7.6	140	Fig.2*
53	BKMJ 0.4-7.5-3YN	0.4	7.5	50	149	10.8	195	Fig.2*
54	BKMJ 0.4-10-3YN	0.4	10	50	199	14.4	195	Fig.2*
55	BKMJ 0.4-15-3YN	0.4	15	50	298	21.7	250	Fig.2*
56	BKMJ 0.4-20-3YN	0.4	20	50	398	28.9	295	Fig.2*
57	BKMJ 0.4-25-3YN	0.4	25	50	497	36.1	315	Fig.3*
58	BKMJ 0.4-30-3YN	0.4	30	50	597	43.3	315	Fig.3*
59	BKMJ 0.45-5-3YN	0.45	5	50	99	7.6	140	Fig.2*
60	BKMJ 0.45-7.5-3YN	0.45	7.5	50	118	9.6	195	Fig.2*

«Электро-Профи» - www.ep.ru

Notes: 1. The single-phase product may be custom-made. When rated voltage is lower than 800VAC, the overall dimensions of single-phase product are the same as those of three-phase product with the same specification;

2. System voltage 127V/220V, grid frequency 60Hz, please select the product of rated voltage 0.23kV or 0.25kV, frequency 60Hz;

3. The product with "*" is of split-phase compensation capacitor; the product has four connecting terminals of star connection, in which the isolated terminal is connected with the zero conductor N.

5. Main Features and Precautions for Use

5.1 Main features

5.1.1 Advanced import production equipment, good metalized polypropylene film, small product size, reliable quality.

5.1.2 Use safety: The product is filled with dry type flame retardant material and installed with the over-pressure protection device and self-discharge device, and is characterized by being free of oil, environmental friendly, corrosion proof, explosion proof, good safety and avoiding the product oil leakage and other hazards.

5.1.3 Applicable environment: applicable for all industrial users and places with high fire rating.

5.1.4 Convenient installation and use: The plastic mounting feet are first inserted from the bottom, and then the product is fixed and installed using screws; it may be installed vertically or horizontally.

5.1.5 BKMJ series products have good materials selected with certain design margin and long use life.

5.1.6 The external installing dimensions of BKMJ series products are the same as those of our BZMJ series, easy for product maintenance and replacement.

5.2 Precautions for use

5.2.1 Type selection of three-phase capacitor:

Grid system voltage (V)	Capacitor rated voltage (kV)	User grid frequency 60 Hz
127/220	0.23/0.25	0.25kV-50 Hz or 0.23kV-60Hz product may be selected
220/380	0.4/0.45/0.525	0.45kV/0.525kV-50 Hz or 0.4kV-60Hz product may be selected
660	0.69/0.75	0.75kV-50 Hz or 0.69kV-60Hz product may be selected

5.2.2 Over-voltage and overheating will shorten the capacitor life. At the tropical or high-altitude region, please recommend the selection of products with higher rated voltage according to the grid system voltage.

5.2.3 When the system is installed with the shunt capacitor, it should pay attention to:

a. Harmonic current amplification is the main cause for capacitor damage. Common harmonic sources include: power electronic devices, frequency converters (energy conservation transformation, such as motor speed control, inverter air conditioner), DC rectifier, inverter, electrolytic plating equipment, electric arc furnace, intermediate frequency furnace, etc. Under the harmonic environment, please refer to the following table for the capacitor type selection and harmonic suppression measures:

Product type selection	Harmonic source power/transformer capacity		
	NLL≤10%	NLL≤20%	20%≤NLL≤40%
Harmonic voltage resultant distortion factor	THDu≤3%	3%<THDu≤5%	THDu>5%
Capacitor rated voltage	0.4kV, 0.45kV	0.45kV, 0.48kV	0.525 kV
Harmonic suppression measures	No need	Proposed series reactor 7%	Proposed series reactor 7% or 14%

Note: The harmonic power ratio NLL means the ratio of the sum of load power generating harmonic to the distribution transformer capacity. When the harmonic power ratio NLL is >40%, it must be installed with CKSG series reactor or take the harmonic suppression measures.

b. In the AC 380V grid system, when the capacitor is in front series connection with the reactor, the capacitor's rated voltage is selected as follows:

When the reactance ratio of the reactor is 6% or 7%, the capacitor's rated voltage should have 0.45kV or 0.48kV selected;

When the reactance ratio of the reactor is 12% or 14%, the capacitor's rated voltage should have 0.525kV selected;

Reactor model selection: The reactor's rated capacity is calculated according to the formula QC×reactance ratio (%). For example, the capacitor BKMJ0.48-30-3 is equipped with the reactor with 7% of reactance ratio, the model of series reactor is CKSG-2.1/0.48-7%).

c. When the motor is in permanent connection with the shunt capacitor, the capacitor's running current should be not more than 90% of the motor's no-load current.

d. When the transformer is of no load, it should ensure the capacitor is out of service to prevent overcompensation.

«Электро-Профи» - www.ep.ru

5.2.4 To ensure normal use of the capacitor, the capacitor circuit should have short-circuit, over-pressure, over-current protections and surge current stopping device (like series reactor or CJ19 special switch contactor).

5.2.5 To disconnect the capacitor power supply, the short-circuit discharge must be done before it can be contacted or tested.

5.2.6 The capacitor terminals and conductors should be in good connection. The current-carrying capacity of the connecting conductor should be 1.43times higher than the capacitor' s rated current.

Product' s rated voltage (kV)	Capacity range (kvar)	Conductor section area (mm ^{2})
0.4, 0.45	≤10	4.0
0.4, 0.45	12~20	6.0
0.4, 0.45	24~32	10.0
0.4, 0.45	35~50	16.0
0.4, 0.45	60	25.0

5.2.7 The capacitor' s top should keep more than 20mm of distance from other components; the capacitor' s mounting spacing should not be less than 30mm, when the altitude is higher than 2000mm, the mounting spacing should not be less than 80mm.

5.2.8 When the capacitor is in fault or its life expires, the product' s internal over-pressure protective device will burst, playing a role of explosion protection; in such case, the shell side will slightly bulge, and the capacitor manifests failure. The user is requested to regularly test the capacitor' s operating voltage and operating current to fulfill prompt maintenance or replacement.

6. Outline and Installing Dimensions:

Fig.1

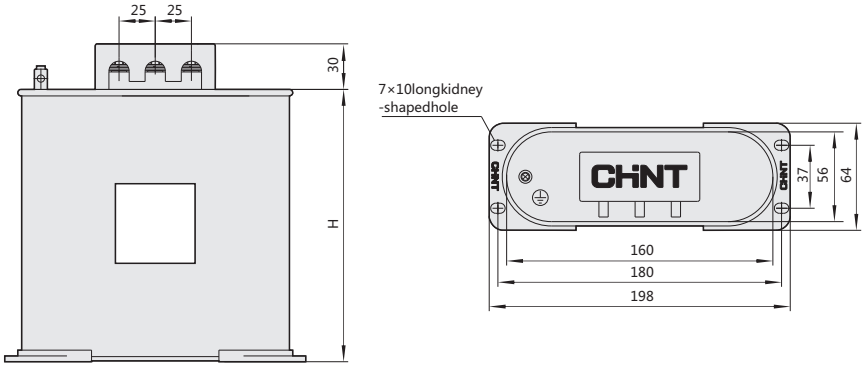

Fig.2

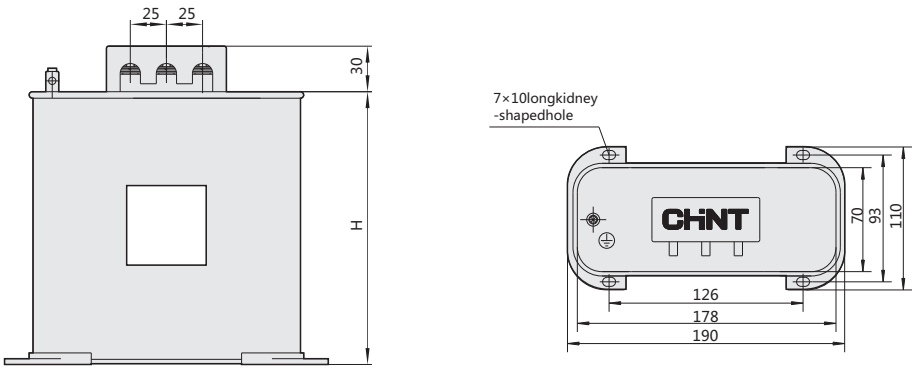

«Электро-Профи» - www.ep.ru

Fig.3

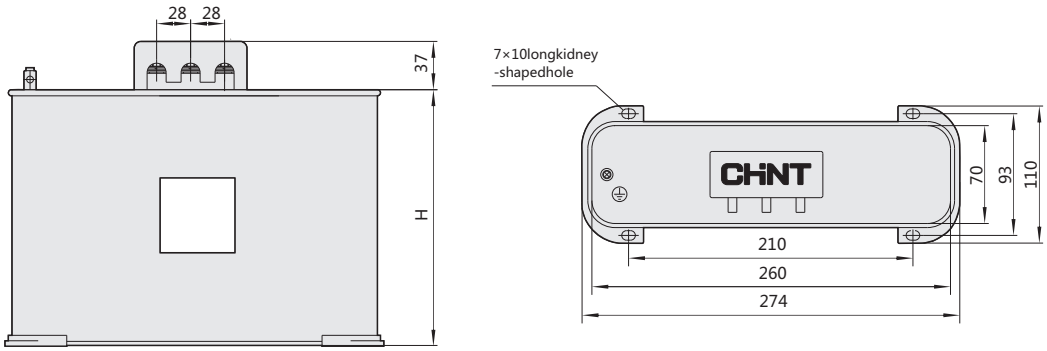

7. Order Instructions

7.1 The user should provide the product' s rated voltage, rated capacity, frequency, number of phases and other parameters.

7.2 The user should provide as much as possible some features of the use place, such as environmental conditions and grid quality.

For example, BKMJ 0.45-30-3 10units

Ordering 10 BKMJ capacitors with rated voltage 450V, rated capacity 30kavr and 3 phases.

H

«Электро-Профи» - www.ep.ru



NWC1 Self-healing Shunt Capacitor

1. General

1.1 Electric ratings: ≤AC1000V;

1.2 Application: For improvement of power factor and power quality;

1.3 Standards: IEC/EN 60831-1:2014 IEC/EN 60831-2:2014.

2. Type designation

N W C 1 □-□-□ □

- L: with inductor
- Number of phase: 3: 3-ph; 1: 1-ph
- Rated capacity Qn (kvar)
- Rated voltage Un (kV)
- Capacitor series

3. Operating conditions

3.1 Ambient temperature: -25℃~+50℃

3.2 Relative humidity: ≤50% at 40℃, ≤90% at 20℃

3.3 Altitude: ≤2000m

3.4 Environmental conditions:
without dangerous gas & steam,
insulated and explosive dust
and dramatic mechanical vibration.

4. Technical data

4.1 Rated voltage: 0.4, 0.415, 0.45, 0.525 and 0.69kV

4.2 Rated frequency: 50Hz or 60Hz.

4.3 Rated capacity: 5~100Kvar

4.4 Capacity error: -5~+10%;

4.5 Dielectric loss tangent value:
≤30kvar tgs≤0.0012
＞30kvar tgs≤0.0015
at rated power frequency voltage.

4.6 Max. allowed over-voltage: 1.1Un, not exceed 8h in 24h;

4.7 Max. allowed over-current: 1.3In;

4.8 Having Self-discharging property: power off, voltage reduces from $\sqrt{2}$ Un (DC) to 75V and below within 3min.

4.9 Model and Specifications

4.10 Inrush current: 200 In;

4.11 Withstand voltage: interelectrode, power frequency 2.15UN, 10s;

4.12 Withstand voltage: pole-to-case, power frequency 3.6kV, 60s;

4.13 Losses : ≤0.3W/kvar;

4.14 Expected life : ≥170,000 h.

«Электро-Профи» - www.ep.ru

Main product models and data sheet

Serial number	Type and Specification	Rated voltage (kV)	Rated capacity (kvar)	Rated frequency (Hz)	Rated capacitor (μF)	Rated current (A)	Enclosure height (mm)	Fig.ure
1	NWC1-0.4-5-3	0.4	5	50	99	7.2	160	Fig.1
2	NWC1-0.4-6-3	0.4	6	50	119	8.7	160	Fig.1
3	NWC1-0.4-7.5-3	0.4	7.5	50	149	10.8	160	Fig.1
4	NWC1-0.4-8-3	0.4	8	50	159	11.5	160	Fig.1
5	NWC1-0.4-10-3	0.4	10	50	199	14.4	160	Fig.1
6	NWC1-0.4-12-3	0.4	12	50	239	17.3	220	Fig.1
7	NWC1-0.4-14-3	0.4	14	50	279	20.2	220	Fig.1
8	NWC1-0.4-15-3	0.4	15	50	298	21.7	220	Fig.1
9	NWC1-0.4-16-3	0.4	16	50	318	23.1	220	Fig.1
10	NWC1-0.4-18-3	0.4	18	50	358	26.0	260	Fig.1
11	NWC1-0.4-20-3	0.4	20	50	398	28.9	260	Fig.1
12	NWC1-0.4-24-3	0.4	24	50	477	34.6	230	Fig.2
13	NWC1-0.4-25-3	0.4	25	50	497	36.1	230	Fig.2
14	NWC1-0.4-30-3	0.4	30	50	597	43.3	230	Fig.2
15	NWC1-0.4-35-3	0.4	35	50	696	50.5	270	Fig.2
16	NWC1-0.4-40-3	0.4	40	50	796	57.7	270	Fig.2
17	NWC1-0.45-5-3	0.45	5	50	79	6.4	160	Fig.1
18	NWC1-0.45-6-3	0.45	6	50	94	7.7	160	Fig.1
19	NWC1-0.45-7.5-3	0.45	7.5	50	118	9.6	160	Fig.1
20	NWC1-0.45-8-3	0.45	8	50	126	10.3	160	Fig.1
21	NWC1-0.45-10-3	0.45	10	50	157	12.8	160	Fig.1
22	NWC1-0.45-12-3	0.45	12	50	189	15.4	220	Fig.1
23	NWC1-0.45-14-3	0.45	14	50	220	18.0	220	Fig.1
24	NWC1-0.45-15-3	0.45	15	50	236	19.2	220	Fig.1
25	NWC1-0.45-16-3	0.45	16	50	252	20.5	220	Fig.1
26	NWC1-0.45-18-3	0.45	18	50	283	23.1	260	Fig.1
27	NWC1-0.45-20-3	0.45	20	50	314	25.7	260	Fig.1
28	NWC1-0.45-24-3	0.45	24	50	377	30.8	230	Fig.2
29	NWC1-0.45-25-3	0.45	25	50	393	32.1	230	Fig.2
30	NWC1-0.45-30-3	0.45	30	50	472	38.5	230	Fig.2
31	NWC1-0.45-35-3	0.45	35	50	550	44.9	270	Fig.2
32	NWC1-0.45-40-3	0.45	40	50	629	51.3	270	Fig.2
33	NWC1-0.525-5-3	0.525	5	50	58	5.5	160	Fig.1
34	NWC1-0.525-6-3	0.525	6	50	69	6.6	160	Fig.1
35	NWC1-0.525-7.5-3	0.525	7.5	50	87	8.2	160	Fig.1
36	NWC1-0.525-8-3	0.525	8	50	92	8.8	160	Fig.1
37	NWC1-0.525-10-3	0.525	10	50	115	11.0	160	Fig.1
38	NWC1-0.525-12-3	0.525	12	50	139	13.2	220	Fig.1
39	NWC1-0.525-14-3	0.525	14	50	162	15.4	220	Fig.1
40	NWC1-0.525-15-3	0.525	15	50	173	16.5	220	Fig.1
41	NWC1-0.525-16-3	0.525	16	50	185	17.6	220	Fig.1
42	NWC1-0.525-18-3	0.525	18	50	208	19.8	260	Fig.1
43	NWC1-0.525-20-3	0.525	20	50	231	22.0	260	Fig.1
44	NWC1-0.525-24-3	0.525	24	50	277	26.4	230	Fig.2
45	NWC1-0.525-25-3	0.525	25	50	289	27.5	230	Fig.2
46	NWC1-0.525-30-3	0.525	30	50	346	33.0	230	Fig.2
47	NWC1-0.525-35-3	0.525	35	50	404	38.5	270	Fig.2
48	NWC1-0.525-40-3	0.525	40	50	462	44.0	270	Fig.2

«Электро-Профи» - www.ep.ru

Serial number	Type and Specification	Rated voltage (kV)	Rated capacity (kvar)	Rated frequency (Hz)	Rated capacitor (μF)	Rated current (A)	Enclosure height (mm)	Fig.ure
49	NWC1-0.69-5-3	0.69	5	50	33	4.2	160	Fig.1
50	NWC1-0.69-6-3	0.69	6	50	40	5.0	160	Fig.1
51	NWC1-0.69-7.5-3	0.69	7.5	50	50	6.3	160	Fig.1
52	NWC1-0.69-8-3	0.69	8	50	53	6.7	160	Fig.1
53	NWC1-0.69-10-3	0.69	10	50	67	8.4	160	Fig.1
54	NWC1-0.69-12-3	0.69	12	50	80	10.0	220	Fig.1
55	NWC1-0.69-14-3	0.69	14	50	94	11.7	220	Fig.1
56	NWC1-0.69-15-3	0.69	15	50	100	12.6	220	Fig.1
57	NWC1-0.69-16-3	0.69	16	50	107	13.4	220	Fig.1
58	NWC1-0.69-18-3	0.69	18	50	120	15.1	260	Fig.1
59	NWC1-0.69-20-3	0.69	20	50	134	16.7	260	Fig.1
60	NWC1-0.69-24-3	0.69	24	50	160	20.1	230	Fig.2
61	NWC1-0.69-25-3	0.69	25	50	167	20.9	230	Fig.2
62	NWC1-0.69-30-3	0.69	30	50	201	25.1	230	Fig.2
63	NWC1-0.69-35-3	0.69	35	50	234	29.3	270	Fig.2
64	NWC1-0.69-40-3	0.69	40	50	267	33.5	270	Fig.2
65	NWC1-0.4-50-3	0.4	50	50	995	72.2	300	Fig.3
66	NWC1-0.4-60-3	0.4	60	50	1194	86.6	300	Fig.3
67	NWC1-0.4-80-3	0.4	80	50	1591	115.5	300	Fig.4
68	NWC1-0.4-100-3	0.4	100	50	1990	144.3	300	Fig.4
69	NWC1-0.45-50-3	0.45	50	50	786	64.2	300	Fig.3
70	NWC1-0.45-60-3	0.45	60	50	943	77	300	Fig.3
71	NWC1-0.45-80-3	0.45	80	50	1258	102.6	300	Fig.4
72	NWC1-0.45-100-3	0.45	100	50	1573	128.0	300	Fig.4

5. Notices

5.1 Please guarantee that the capacitors are operated under specified conditions, including the proper temperature, voltage and current, as over- voltageand over-current may shorten the life of the capacitor;

5.2 Please pay attention to the points following when the capacitor is shuntly connected in the system

a. For the system of current regulating system and the electric equipments system, the capacitor should not be directly connected;

b. Operational current of the capacitor should be less than the off-load current of the shuntly connected motor;

c. When the transformer is off-load, the capacitor should stop operating.

5.3 Specific switches, contactors and over-current relays should be adopted when the capacitor is shuntly connected in the system.

«Электро-Профи» - www.ep.ru

6. Mounting dimensions (mm)

Figure 1

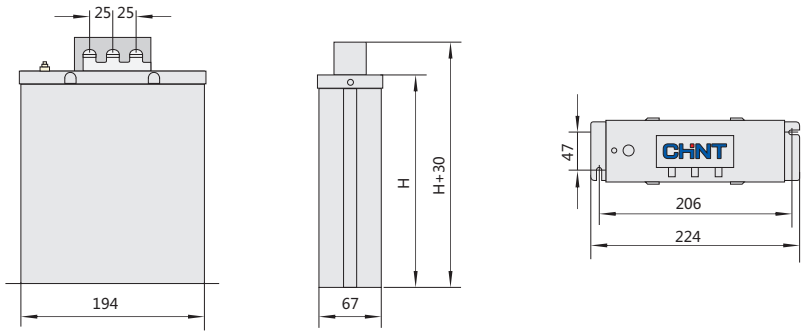

Figure 2

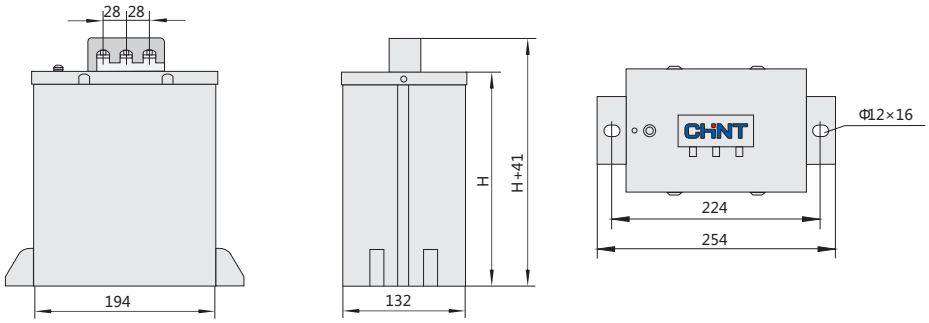

Figure 3

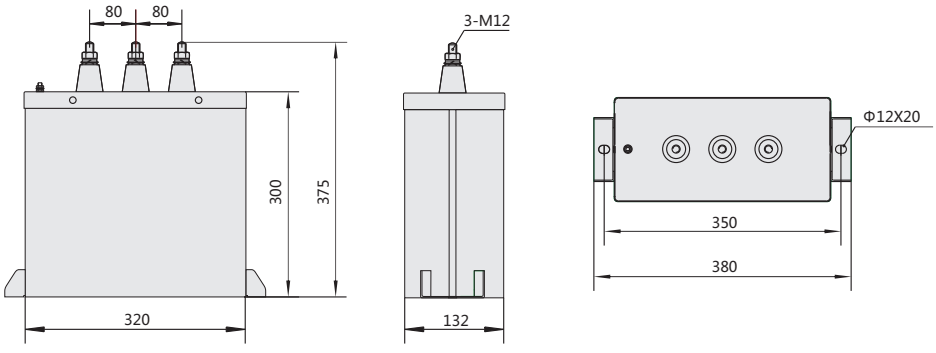

H

«Электро-Профи» - www.ep.ru

Figure 3

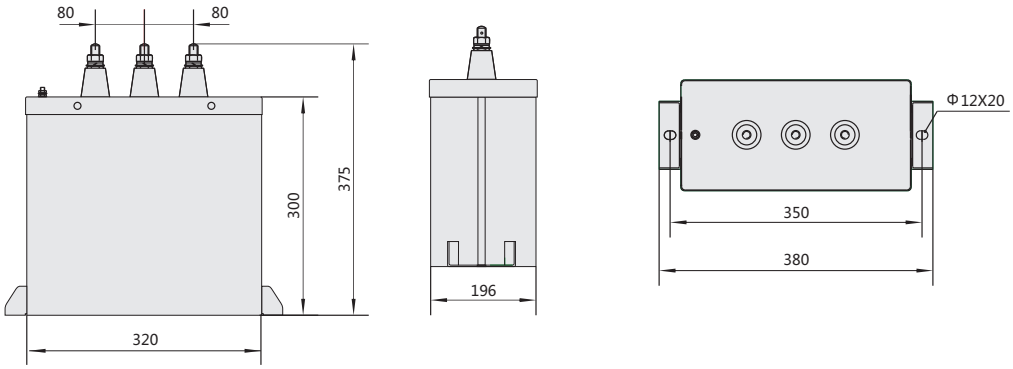

7. Ordering information

On ordering, please clarify rated voltage, capacity, number of phase, frequency, etc of the products; and associated conditions at the mounting place.

«Электро-Профи» - www.ep.ru



NWC5 Self-healing Shunt Capacitor

1. General

1.1 Edectric ratings: ≤AC1000V.

1.2 Application: Newly developed energy-saving product for improvement of power factor and power quality;

1.3 Standards: IEC/EN 60831-1:2014 IEC/EN 60831-2:2014

2. Type designation

N W C 5 □-□-□

- Number of phase: 3: 3-ph
- Rated capacity Qn (kVar)
- Rated voltage Un (kV)
- Capacitor series

3. Operating conditions

3.1 Ambient temperature: -25℃~+50℃

3.2 Relative humidity: ≤50% at 40℃, ≤90% at 20℃

3.3 Altitude: ≤2000m

3.4 Environmental conditions: without dangerous gas & steam, insulated and explosive dust and dramatic mechanical vibration.

4. Technical data

4.1 Rated voltage: 0.23, 0.4, 0.45, 0.525kV

4.2 Rated frequency: 50Hz or 60Hz.

4.3 Rated capacity: (1~40)kVar

4.4 Capacity error: -5~+10%;

4.5 Dielectric loss tangent value: ≤0.0012, at rated power frequency voltage

4.6 Max. allowed over-voltage: 1.1Un, not exceed 8h in 24h

4.7 Max. allowed over-current: 1.3In (1.6 In, 2h/24h; 2.0 In, 30min/24h)

4.8 Having Self-discharging property: power off, voltage reduces from $\sqrt{2}$ Un (DC) to 75V and below within 3min.

4.9 Model and Specifications

4.10 Inrush current: 200In

4.11 Withstand voltage: interelectrode, power frequency 2.15UN, 10s

4.12 Withstand voltage: pole-to-case, power frequency 3.6kV, 60s

4.13 Losses : ≤0.2W/kvar

4.14 Use safety : over-pressure protection device,self-healing

4.15 Fixing: Threaded bolt M12 and M16

4.16 Expected life : ≥170,000 h

«Электро-Профи» - www.ep.ru

Main product models and data sheet

Serial number	Type and Specification	Rated voltage (kV)	Rated frequency (Hz)	Rated capacity (kVar)	Rated capacitor (μF)	Rated current (A)	Dimensions D×H(mm)	Mounting dimensions	figure number
1	NWC5-0.23-1-3 (60Hz)	0.23	60	1	50	2.5	Φ60×190	M10×10	Figure 1
2	NWC5-0.23-3-3 (60Hz)	0.23	60	3	151	7.5	Φ60×240		
3	NWC5-0.23-5-3 (60Hz)	0.23	60	5	251	12.6	φ76×240	M12×16	Figure 2
4	NWC5-0.23-7.5-3 (60Hz)	0.23	60	7.5	376	18.8	φ76×290		
5	NWC5-0.23-10-3 (60Hz)	0.23	60	10	502	25.1	φ86×290		
6	NWC5-0.23-15-3 (60Hz)	0.23	60	15	753	37.7	φ96×290	M16×25	
7	NWC5-0.23-20-3 (60Hz)	0.23	60	20	1003	50.2	φ116×290		Figure 3
8	NWC5-0.4-3-3	0.4	50	3	59.7	4.3	Φ60×175	M10×10	Figure 1
9	NWC5-0.4-5-3	0.4	50	5	99	7.2	Φ60×175		
10	NWC5-0.4-7.5-3	0.4	50	7.5	149	10.8	Φ60×240		
11	NWC5-0.4-10-3	0.4	50	10	199	14.4	φ76×240	M12×16	Figure 2
12	NWC5-0.4-15-3	0.4	50	15	298	21.7	Φ76×290		
13	NWC5-0.4-16-3	0.4	50	16	318	23.1	Φ76×290		
14	NWC5-0.4-20-3	0.4	50	20	398	28.9	Φ86×290		
15	NWC5-0.4-25-3	0.4	50	25	497	36.1	Φ96×290	M16×25	
16	NWC5-0.4-30-3	0.4	50	30	597	43.3	φ106×290		Figure 3
17	NWC5-0.4-40-3	0.4	50	40	796	57.7	φ116×290		
18	NWC5-0.45-3-3	0.45	50	3	47.2	3.8	Φ60×175	M10×10	Figure 1
19	NWC5-0.45-5-3	0.45	50	5	79	6.4	Φ60×175		
20	NWC5-0.45-7.5-3	0.45	50	7.5	118	9.6	Φ60×240		
21	NWC5-0.45-10-3	0.45	50	10	157	12.8	φ76×240	M12×16	Figure 2
22	NWC5-0.45-15-3	0.45	50	15	236	19.2	Φ76×290		
23	NWC5-0.45-16-3	0.45	50	16	252	20.5	Φ76×290		
24	NWC5-0.45-20-3	0.45	50	20	314	25.7	Φ86×290		
25	NWC5-0.45-25-3	0.45	50	25	393	32.1	Φ96×290	M16×25	
26	NWC5-0.45-30-3	0.45	50	30	472	38.5	φ106×290		Figure 3
27	NWC5-0.45-40-3	0.45	50	40	629	51.3	φ116×290		
28	NWC5-0.48-3-3	0.48	50	3	41.5	3.6	Φ60×175	M10×10	Figure 1
29	NWC5-0.48-5-3	0.48	50	5	69	6.0	Φ60×175		
30	NWC5-0.48-7.5-3	0.48	50	7.5	104	9.0	Φ60×240		
31	NWC5-0.48-10-3	0.48	50	10	138	12.0	φ76×240	M12×16	Figure 2
32	NWC5-0.48-15-3	0.48	50	15	207	18.0	Φ76×290		
33	NWC5-0.48-16-3	0.48	50	16	221	19.2	Φ76×290		
34	NWC5-0.48-20-3	0.48	50	20	277	24.0	Φ86×290		
35	NWC5-0.48-25-3	0.48	50	25	346	30.0	Φ96×290	M16×25	
36	NWC5-0.48-30-3	0.48	50	30	415	36.1	φ106×290		Figure 3
37	NWC5-0.48-40-3	0.48	50	40	553	48.1	φ116×290		
38	NWC5-0.525-3-3	0.525	50	3	34.7	3.3	Φ60×240	M10×10	Figure 1
39	NWC5-0.525-5-3	0.525	50	5	58	5.5	Φ60×240		
40	NWC5-0.525-7.5-3	0.525	50	7.5	86.7	8.2	Φ60×240		
41	NWC5-0.525-10-3	0.525	50	10	115	11.0	φ76×240	M12×16	Figure 2
42	NWC5-0.525-15-3	0.525	50	15	173	16.5	Φ76×290		
43	NWC5-0.525-16-3	0.525	50	16	185	17.6	Φ76×290		
44	NWC5-0.525-20-3	0.525	50	20	231	22.0	Φ86×290		
45	NWC5-0.525-25-3	0.525	50	25	289	27.5	Φ96×290	M16×25	
46	NWC5-0.525-30-3	0.525	50	30	346	33.0	φ106×290		Figure 3
47	NWC5-0.525-40-3	0.525	50	40	346	33.0	φ116×290		
48	NWC5-0.45-5-3YN	0.45	50	5	79	6.4	φ76×240	M12×16	Figure 4
49	NWC5-0.45-7.5-3YN	0.45	50	7.5	118	9.6	φ76×240		
50	NWC5-0.45-10-3YN	0.45	50	10	157	12.8	φ76×290		
51	NWC5-0.45-15-3YN	0.45	50	15	236	19.2	φ86×290		
52	NWC5-0.45-16-3YN	0.45	50	16	252	20.5	φ96×290	M16×25	
53	NWC5-0.45-20-3YN	0.45	50	20	314	25.7	φ96×290		
54	NWC5-0.45-25-3YN	0.45	50	25	393	32.1	φ106×290		
55	NWC5-0.45-30-3YN	0.45	50	30	472	38.5	φ116×290		

Note: All sizes are customizable with rated frequency 50Hz or 60Hz, single-phase or three-phase capacitor; the products of the same capacity have the same overall dimensions.

«Электро-Профи» - www.ep.ru

5. Features

5.1 Safe and reliable operation because of the independent protective enclosure;

5.2 With good sealing properties; and outgoing terminals for convenient wiring and reliable connection;

5.3 Available for use in the places with higher ambient temperature and voltage variation ;

5.4 Fixed type, convenient for mounting and elegant appearance due o to novel mounting pins.

6. Note

6.1 Please guarantee that the capacitors are operated under specified conditions, including the proper temperature, voltage and current, as over-voltage and over-current may shorten the life of the capacitor;

6.2 Please pay attention to the points following when the capacitor is shuntly connected in the system
a. For the system of current regulating system and the electric equipments system, the capacitor should not be directly connected;
b. Operational current of the capacitor should be less than the off-load current of the shuntly connected motor;
c. When the transformer is off-load, the capacitor should stop operating.

6.3 Specific switches, contactors and over-current relays should be adopted when the capacitor is shuntly connected in the system.

7. Mounting dimensions (mm)

Figure 1

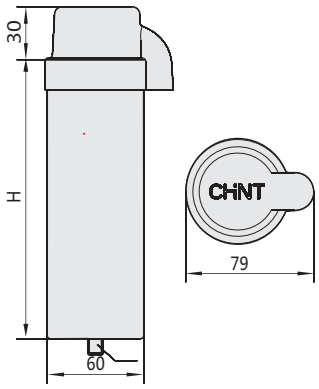

Figure 2

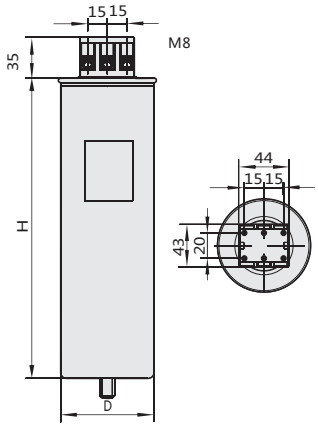

Figure 3

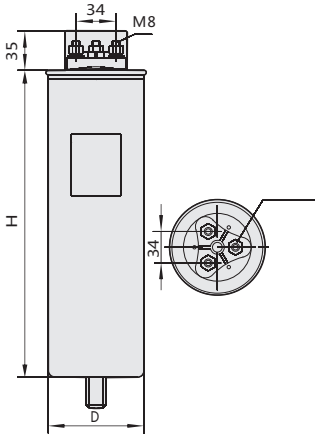

Figure 4

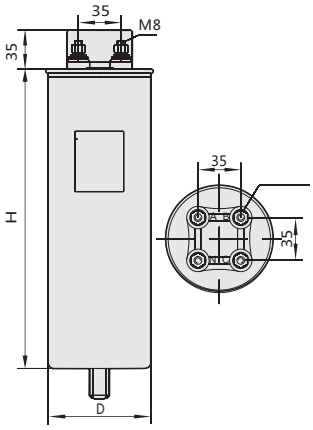

Note: The capacity of three-phase capacitor (1~8)kvar is seen in Fig.1; (10~25)kvar in Fig.2; (30~40)kvar in Fig.3;The split phase compensation capacitor has 4 connecting terminals with star connection and neutral line N lead-out, as shown in Fig.4.

H

«Электро-Профи» - www.ep.ru



NWC6 series dry low-voltage shunt capacitor

1.Scope of application

NWC6 series dry low-voltage shunt capacitor is suitable for power frequency AC power system with nominal voltage of 1000V and below to raise power factor, reduce line loss and improve voltage quality. It is filled with dry flame-retardant materials internally.

Operative norm: IEC/EN 60831-1:2014 IEC/EN 60831-2:2014.

2. Model and its meaning

N WC 6-□-□-□

- Phase number: 3-Three-phase 1-Single-phase
- Rated capacity (kvar)
- Rated voltage (kV)
- Design No.
- Self-healing low -voltage shunt capacitor
- Enterprise code

Note: The default rated frequency is 50Hz. For products with the rated frequency of 60Hz, mark 60Hz.

3. Normal working conditions and installation conditions

3.1 Ambient air temperature: -25℃ ~ +50℃-25/C) ; (can customized -25/D)

3.2 Relative humidity: ≤50% at 40℃; ≤90% at 20℃ ;

3.3 Altitude: ≤2000m;

3.4 Environmental conditions: No harmful gases and vapor, conductive or explosive dust and severe mechanical vibration.

«Электро-Профи» - www.ep.ru

4. Main technical parameters and technical performance

4.1 Rated voltage: 0.23 kV, 0.25 kV, 0.4kV, 0.45kV, 0.48 kV, 0.525kV;
4.2 Rated frequency: 50Hz or 60Hz;
4.3 Rated capacity: (5～40)kvar;
4.4 Capacitance deviation: -5%～+10% ; the ratio of maximum and minimum measured of the capacitance between any two outlet terminals of the three-phase capacitor should not exceed 1.08;
4.5 Tangent of the loss angle tgδ: Lower than 0.0012 under rated power frequency voltage;
4.6 Withstand voltage: interelectrode, power frequency 2.15U_N, 10s; pole-to-case, power frequency 3.6kV, 60s;
4.7 Maximum permissible overvoltage: 1.1 U_N; no more than 8h every 24h;
4.8 Maximum permissible current: 1.3I_N; (1.6 In, 2h/24h; 2.0 In, 30min/24h)
4.9 Self-discharge characteristic: After the capacitor is applied with $\sqrt{2}$ U_N DC voltage and the power is disconnected for 3min, the remaining voltage drops 75V or below;
4.10 Inrush current: 200 In
4.11 Withstand voltage: interelectrode, power frequency 2.15UN, 10s
4.12 Withstand voltage: pole-to-case, power frequency 3.6kV, 60s
4.13 Losses : ≤0.20W/kvar
4.14 Use safety:Dry-type,over-pressure protection device,self-healing
4.15 Fixing: Bottom threaded bolt M12 and M16
4.16 Expected life:≥200,000 h

Main product models and data sheet

Serial number	Type and Specification	Rated voltage (kV)	Rated frequency (Hz)	Rated capacity (kVar)	Rated capacitor (μF)	Rated current (A)	Dimensions D×H(mm)	Mounting dimensions	Figure number
1	NWC6-0.23-1-3 (60Hz)	0.23	60	1	50	2.5	Φ60×190	M10×10	Figure 1
2	NWC6-0.23-3-3 (60Hz)	0.23	60	3	151	7.5	Φ60×240		
3	NWC6-0.23-5-3 (60Hz)	0.23	60	5	251	12.6	Φ76×240	M12×16	Figure 2
4	NWC6-0.23-7.5-3 (60Hz)	0.23	60	7.5	376	18.8	Φ76×290		
5	NWC6-0.23-10-3 (60Hz)	0.23	60	10	502	25.1	Φ86×290		
6	NWC6-0.23-15-3 (60Hz)	0.23	60	15	753	37.7	Φ96×290	M16×25	
7	NWC6-0.23-20-3 (60Hz)	0.23	60	20	1003	50.2	Φ116×290		Figure 3
8	NWC6-0.4-3-3	0.4	50	3	59.7	4.3	Φ60×175	M10×10	Figure 1
9	NWC6-0.4-5-3	0.4	50	5	99	7.2	Φ60×175		
10	NWC6-0.4-7.5-3	0.4	50	7.5	149	10.8	Φ60×240		
11	NWC6-0.4-10-3	0.4	50	10	199	14.4	ϕ76×240	M12×16	Figure 2
12	NWC6-0.4-15-3	0.4	50	15	298	21.7	Φ76×290		
13	NWC6-0.4-16-3	0.4	50	16	318	23.1	Φ76×290		
14	NWC6-0.4-20-3	0.4	50	20	398	28.9	Φ86×290		
15	NWC6-0.4-25-3	0.4	50	25	497	36.1	Φ96×290	M16×25	
16	NWC6-0.4-30-3	0.4	50	30	597	43.3	ϕ106×290		Figure 3
17	NWC6-0.4-40-3	0.4	50	40	796	57.7	ϕ116×290		
18	NWC6-0.45-3-3	0.45	50	3	47.2	3.8	Φ60×175	M10×10	Figure 1
19	NWC6-0.45-5-3	0.45	50	5	79	6.4	Φ60×175		
20	NWC6-0.45-7.5-3	0.45	50	7.5	118	9.6	Φ60×240		
21	NWC6-0.45-10-3	0.45	50	10	157	12.8	ϕ76×240	M12×16	Figure 2
22	NWC6-0.45-15-3	0.45	50	15	236	19.2	Φ76×290		
23	NWC6-0.45-16-3	0.45	50	16	252	20.5	Φ76×290		
24	NWC6-0.45-20-3	0.45	50	20	314	25.7	Φ86×290		
25	NWC6-0.45-25-3	0.45	50	25	393	32.1	Φ96×290	M16×25	
26	NWC6-0.45-30-3	0.45	50	30	472	38.5	ϕ106×290		Figure 3
27	NWC6-0.45-40-3	0.45	50	40	629	51.3	ϕ116×290		
28	NWC6-0.48-3-3	0.48	50	3	41.5	3.6	Φ60×175	M10×10	Figure 1
29	NWC6-0.48-5-3	0.48	50	5	69	6.0	Φ60×175		
30	NWC6-0.48-7.5-3	0.48	50	7.5	104	9.0	Φ60×240		
31	NWC6-0.48-10-3	0.48	50	10	138	12.0	ϕ76×240	M12×16	Figure 2
32	NWC6-0.48-15-3	0.48	50	15	207	18.0	Φ76×290		
33	NWC6-0.48-16-3	0.48	50	16	221	19.2	Φ76×290		
34	NWC6-0.48-20-3	0.48	50	20	277	24.0	Φ86×290		
35	NWC6-0.48-25-3	0.48	50	25	346	30.0	Φ96×290	M16×25	
36	NWC6-0.48-30-3	0.48	50	30	415	36.1	ϕ106×290		Figure 3
37	NWC6-0.48-40-3	0.48	50	40	553	48.1	ϕ116×290		

H

«Электро-Профи» - www.ep.ru

Serial number	Type and Specification	Rated voltage (kV)	Rated frequency (Hz)	Rated capacity (kVar)	Rated capacitor (μF)	Rated current (A)	Dimensions D×H(mm)	Mounting dimensions	figure number
38	NWC6-0.525-3-3	0.525	50	3	34.7	3.3	Φ60×240	M10×10	Figure 1
39	NWC6-0.525-5-3	0.525	50	5	58	5.5	Φ60×240		
40	NWC6-0.525-7.5-3	0.525	50	7.5	86.7	8.2	Φ60×240		
41	NWC6-0.525-10-3	0.525	50	10	115	11.0	ϕ76×240	M12×16	Figure 2
42	NWC6-0.525-15-3	0.525	50	15	173	16.5	Φ76×290		
43	NWC6-0.525-16-3	0.525	50	16	185	17.6	Φ76×290		
44	NWC6-0.525-20-3	0.525	50	20	231	22.0	Φ86×290		
45	NWC6-0.525-25-3	0.525	50	25	289	27.5	Φ96×290	M16×25	
46	NWC6-0.525-30-3	0.525	50	30	346	33.0	ϕ106×290		Figure 3
47	NWC6-0.525-40-3	0.525	50	40	346	33.0	ϕ116×290		
48	NWC6-0.45-5-3YN	0.45	50	5	79	6.4	ϕ76×240	M12×16	Figure 4
49	NWC6-0.45-7.5-3YN	0.45	50	7.5	118	9.6	ϕ76×240		
50	NWC6-0.45-10-3YN	0.45	50	10	157	12.8	ϕ76×290		
51	NWC6-0.45-15-3YN	0.45	50	15	236	19.2	ϕ86×290		
52	NWC6-0.45-16-3YN	0.45	50	16	252	20.5	ϕ96×290	M16×25	
53	NWC6-0.45-20-3YN	0.45	50	20	314	25.7	ϕ96×290		
54	NWC6-0.45-25-3YN	0.45	50	25	393	32.1	ϕ106×290		
55	NWC6-0.45-30-3YN	0.45	50	30	472	38.5	ϕ116×290		

Note: All sizes are customizable with rated frequency 50Hz or 60Hz, single-phase or three-phase capacitor; the products of the same capacity have the same overall dimensions.

5. Main technical parameters and technical performance

5.1 Main features

5.1.1 Use safety: This product is a dry product; it is filled with dry flame-retardant materials internally, such as: thermal conductivity silica gel. Cylindrical aluminum tensile shell is provided with the over-pressure protection device; it is characterized by oil-free, environmentally friendly, corrosion-resistant, anti-explosion etc. and it is safe and reliable.

5.1.2 Applicable environment: Suitable for places of higher fire rating.

5.1.3 Easy installation: The bottom is the M12/M16 stud fixedly installed; the product can be both mounted vertically and horizontally.

5.1.4 Using NWC6 dry capacitor can realize reactive power compensation cabinet modular design, reduce unit cost and make maintenance more convenient.

5.2 Notice for use

5.2.1 Capacitor selection:

Grid system voltage	Capacitor rated voltage	User grid frequency
127/220	0.23/0.25	Use 0.25kV-50 Hz or order 60Hz products
220/380	0.4/0.45/0.525	Use 0.45kV-50 Hz or order 60Hz products

5.2.2 Overvoltage and overheating will shorten the life of the capacitor. In tropical or high-altitude regions, recommend the users to choose products of higher rated voltage according to the voltage of power network system.

5.2.3 When the system is installed with the shunt capacitor, attention should be paid to the following circumstances:

a. Under the circumstance of severe harmonic content, do not directly install the shunt capacitor and connect the 7%/14% reactor in series for use. Under the circumstance of modest harmonic content, enhance the voltage level of the capacitor for derating, such as: 0.525kV. (Common harmonic sources are frequency converter, DC rectifier, inverter, electrolytic plating equipment, medium frequency furnace, electric arc furnace etc.).

b. When the motor is fixedly connected with the shunt capacitor, operating current of the

c. When the transformer is in empty load, the capacitor should be guaranteed to exit from the operation to prevent excessive compensation.

5.2.4 To ensure proper use of the capacitor, there should be short circuit, over-voltage, over-current protection and limiting inrush device in the capacitor circuit (such as series reactor or CJ19 special switch contacts).

5.2.5 The capacitor is disconnected from the power supply and must be short-circuited discharged, and then can be touched or tested.

5.2.6 The capacitor terminals and conductors should be well connected. Current-carrying capacity of the connecting wire is 1.43 times higher than the rated current of the capacitor.

«Электро-Профи» - www.ep.ru

Product rated voltage	Capacity range	Wire cross -sectional area
0.23、0.25	≤5	4.0
0.23、0.25	6~12	6.0
0.23、0.25	14~20	10.0
0.4、0.45	≤10	4.0
0.4、0.45	12~20	6.0
0.4、0.45	24~30	10.0

5.2.7 A distance of 20mm or more between the top of the capacitor and other components should be kept to ensure reliable operation of over-pressure protection device. The installation space between capacitors should be considered for the cooling condition of the equipment.

5.2.8 When the capacitor malfunctions or the service life is terminated, over-pressure protection device inside the product will be broken, the upper cover slightly bulges and the capacitor failure occurs. Users are asked to periodically detect the operating current and surface temperature of the capacitor and timely maintain it.

6. Physical and installation dimensions:

Figure 1

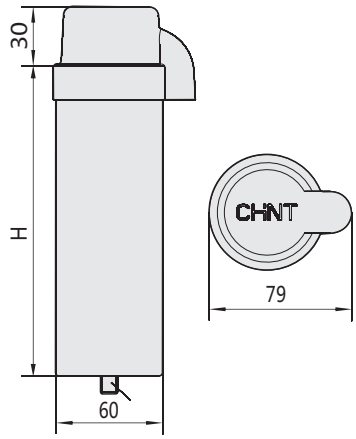

Figure 2

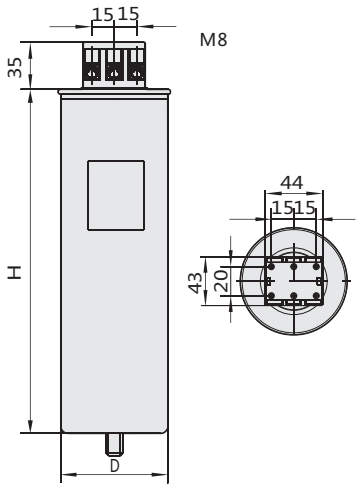

Figure 3

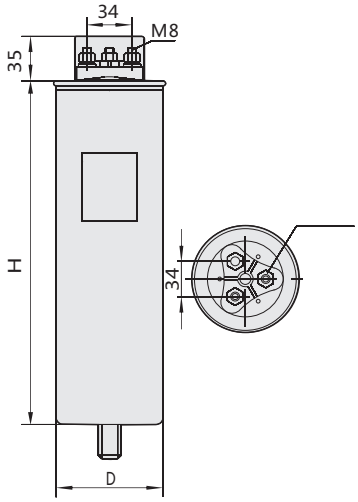

Figure 4

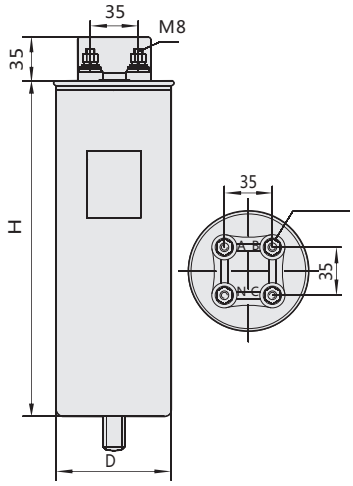

Note: The capacity of three-phase capacitor (1~8)kvar is seen in Fig.1; (10~25)kvar in Fig.2; (30~40)kvar in Fig.3;The split phase compensation capacitor has 4 connecting terminals with star connection and neutral line N lead-out, as shown in Fig.4.

7. Ordering information

7.1 Users must provide product rated voltage, rated capacity, frequency, phase number and other parameters.

7.2 Users must provide some of the features of the places of use as far as possible, such as environmental conditions, power network quality.

Such as: NWC6 0.4-30-3 10 sets

Ordering 10 NWC6 series three-phase capacitors with the rated voltage of 400V and rated capacity of 30kavr.

«Электро-Профи» - www.ep.ru



JKF8 Intelligent Low-Voltage Reactive Power Compensation Controller

1. General

JKF8 Intelligent Low-Voltage
Reactive Power Compensation Controller
(hereinafter referred to as 'controller') is a dedicated controller which can make compensations for the reactive power of low voltage distribution system.

2. Type designation

JK F 8-□ , □ (50Hz or 60Hz)

Rated voltage: 380V,440V,220V,240V

Output loop specification: 6,12

Low-Voltage
Reactive Power Compensation Controller Series

3. Features

3.1 With combined control on reactive power and power factor, a reliable input can be ensured under low load, and surge switching can be prevented.

3.2 Real-time display of the network status, including parameters such as power factor, voltage, current, active power, and reactive power, etc.

3.3 The polarity of the sampling signal can be automatically identified. Therefore, there is no need to worry about wrong connections with reversed polarity.

3.4 In case the voltage of the electrical power network is lower than 300 V, or exceeds the preset over-voltage protection value, the connected capacitor banks will be automatically and rapidly(5 sec.) disconnected in steps, and the voltage value will be displayed.

3.5 In case the signal from the secondary coil of the current transformer is smaller than 150 mA, the controller will prevent any more capacitor from being connected, in the mean time, automatically and rapidly (5 sec.) disconnect the connected capacitor banks step-wise.

3.6 Switching (opening/closing control of the contactor) prevention time for the same group of capacitors is 3 minutes (capacitor discharge duration)

3.7 The controller is with cyclic automated-self-test function, which facilitates the factory acceptance test for a capacitor panel.

4. Operating conditions

4.1 Ambient temperature: -10℃~+40℃

4.2 Relative humidity: ≤50%, when 40℃, ≤90% when 20℃

4.3 Altitude: ≤2000 m

4.4 Operation environment: free of hazardous gas and/or vapor, conductive or explosive dust, or rigorous mechanical vibration.

4.5 Operation voltage: Un±20%

«Электро-Профи» - www.ep.ru

5. Technical data

Parameters	Technical Specifications
Sampling voltage	400VAC±10% (Can be customized: 220VAC, 440VAC)
Sampling current	150mA~5 A
Rated frequency	50/60Hz±5%
Low-current capacitor connection prevention	≤150 mA
Current transformation ratio	Range of transformation ratio for sampling current transformer: 5~800, Preset value of the ratio (preset value in factory: 60, which means 300/5)
Time lag	5~120 seconds (preset value in factory: 30 seconds)
Preset mode	Full automation mode (displayed code F-0: 1): no need to set the capacitor connection threshold or the capacitor disconnection threshold. Manual setup mode(displayed code F-0: 0): need to set the capacitor connection threshold and the capacitor disconnection threshold manually.
Capacitor connection threshold	Full automation mode: capacitor banks in the smallest step Manual mode: preset value for reactive power: 1~120 kvar (preset value in factory: 10 kvar)
Capacitor disconnection threshold	Power factor, 0.85 ~ -0.95 continuously adjustable (preset value in factory: 1.00)
Over-voltage threshold	400 V~456 V (preset value in factory: 430 V), 230V~270V (preset value in factory: 250 V)
Loop number	JKF8-6 (loop number can be set between 1 and 6), JKF8-12(loop number can be set between 1 and 12)
Operation mode	Automated cyclic opening/closing control & manual operation
Max. power consumption	15 W
Output contact point capacity	5A/230V(or 3A/400V)
Weighyt	Approximately1.5 Kg

6. Wiring diagram

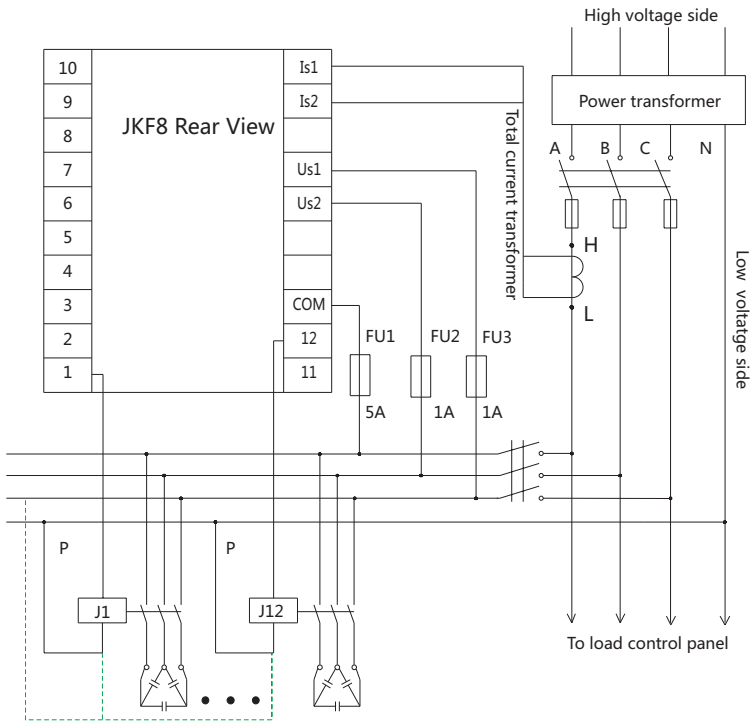

Note: If the coil voltage of the contactor is 230 V,
point P is connected to Phase N.
If the coil voltage of the contactor is 400 V,
point P is connected to Phase B or C.

H

«Электро-Профи» - www.ep.ru

6.1 Connection terminal US1 and US2 are to be connected to the sampling voltage. AC 400 V or AC 220V shall be connected.

6.2 Terminal IS1 and IS2 are to be connected to the sampling current, which shall be sampled from the transformed current generated by the current transformer for the load, and which shall not be in-phase with US1 and US2 (if A is for current, then B and C are for voltage).

6.3 Terminal COM is the common shared terminal to be connected to number 1 to 12 relays in the output lines of the controller, and each of the terminals 1~12 is to be connected to the output control line to control the respective contactor in the respective compensation loop of the capacitor panel.

6.4 If the coil voltage of the contactor J is 230 V, then Point P is connected to Phase N.
If the coil voltage of the contactor J is 400 V, then Point P is connected to Phase C (as long as it is not in-phase with terminal COM).

6.5 FU1~3 are to be connected to fusers which are supplied by the user.

7. Description of parameters

7.1 Description of dynamic parameters

Code	Signification	Unit	Description
I	Current	A	If the measured value is out of the display range, the approximate value will be displayed, e.g., 1260 A is displayed as E13
U	Voltage	V	Display the measured voltage value
Q	Reactive power	kVar	If the measured value is out of the display range, the approximate value will be displayed, e.g., 1360 Kvar is displayed as E14.
P	Active power	kW	If the measured value is out of the display range, the approximate value will be displayed, e.g., 1360 kW is displayed as E14.

7.2 Description of preset parameters (menu description)

Code	Description	Range of Settings	Factory Settings	Change Step	Remark
F-0	Preset mode	1 or 0	1	—	1 full automation 0 manual setup
F-1	Capacitor connection threshold	1~120 kVar	10 kVar	1 kVar	This parameter is invalid under the full automation mode
F-2	Target power factor	0.85~-0.95	1.00	0.01	"-" stands for system capacity
F-3	Switching time lag	5~120 sec .	30 sec.	1 sec.	
F-4	Over-voltage protection	400 V~456 V	430 V	2 V	Voltage difference: 8~10V
F-5	Number of control loop	1~6 or 1~12	6 or 12	1	Two types of specifications
F-6	Transformation ratio of the sampling current transformer	5~800	60	5	(300: 5)

8. Mounting dimensions (mm)

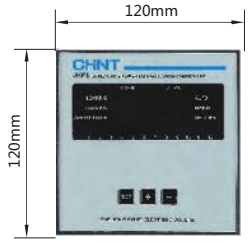

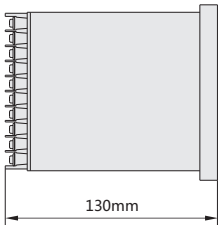

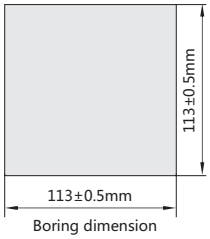

9. Ordering information

On ordering, please clarify rated voltage, number of phase, frequency, etc of the products; and associated conditions at the mounting place.

«Электро-Профи» - www.ep.ru



NWK1-GR
Series Low Voltage Reactive Compensation Controller

1. Scope of application

NWK1-GR series low voltage reactive power compensation controller adopts large dot matrix LCD screen and mobile phone menu operation mode to realize man-machine exchange. Its sampling voltage range is AC (100~800) V and operating frequency range is (45~65) Hz, which are suitable for reactive power compensation and power distribution monitoring in different regions of the world.

ASIC chip is used to calculate and analyze the voltage and current collected through FFT (Fast Fourier Transform), so under a large harmonic component of power grid, the reactive power can be used as the basis of switching capacitors and combined with the power factor for switching. The capacitor capacity can be matched or switched in three phases or single phase by cycle, code or any combination of values to realize the optimal compensation effect. It is the newest smart reactive compensation controller introduced by our company.

The product integrates the functions of digital power grid measurement, record and storage, as well as Chinese and English or graphic real-time display of dozens of electricity, with high power measurement accuracy under harmonic environment. Besides, it provides power quality analysis, harmonic value protection and RS485 communication transmission function.

Applicable standards: JB/T9663-2013; DL/T597-1996.

2. Model and definition

NWK 1 - G R - □ GB □

- Signal control mode: Default relay, D represents +12V DC
- Compensation mode: GB common compensation FB mixed compensation
- Maximum number of output circuits: 12 circuits, 16circiuts
- Functional option: R indicates Rs485 communication
- G represents power factor
- Design serial number
- Reactive power compensation controller

Note: When the control signal outputs +12V DC, the control object is ZCK smart combination switch or TSC thyristor switch.

3. Operating conditions

3.1 Ambient temperature -20℃~55℃.

3.2 The air humidity shall not exceed 50% at 40℃ and 90% at 20℃.

3.3 The altitude shall not exceed 2500 m.

3.4 There is no corrosive gas, no conductive dust and no inflammable and explosive medium in the surrounding environment.

3.5 There is no violent vibration at the location of installation.

4. Main functional characteristics:

4.1 The product can realize full three-phase compensation or can be tailor-made for mixed compensation of three phases and single phase.

4.2 The dot matrix LCD displays real-time fundamental power factor, power factor with harmonic, voltage, frequency, current, ΔKVAR, active power, reactive power, apparent power, THDU, THDI, 3rd-15th harmonic bar chart, phase angle, electric energy, temperature, time and other power grid parameters.

4.3 Unique smart line checking function: The product can check the phase sequence of three-phase voltage, current polarity and phase sequence, perform software wire change, and guide users to check and change the line according to Chinese prompts, which is extremely convenient.

4.4 Capacitance setting: The capacitance can be set flexibly and conveniently according to coded value, equal capacity value or arbitrary value.

«Электро-Профи» - www.ep.ru

4.5 For capacitors with the same capacity, select the capacitors according to operation frequency to achieve balanced switching; for more than two kinds of capacitors with different capacity, select suitable capacitors automatically according to the reactive power required, switch them on or off one by one, and give consideration to the number of times; for compensation schemes with both different capacity and the same capacity, select suitable capacitors automatically according to the reactive power required, then switch them according to operation frequency, and switch the capacitors with low operation frequency at first. This mode is especially suitable for users with unstable electric load or frequent light load of distribution transformer.

4.6 The capacity of the capacitors which have been shut down or have fault is set to 0, and such capacitors will no longer be involved in operation.

4.7 The product has a perfect alarm mechanism. The LCD screen will display Chinese prompts for overvoltage, undercurrent, over-harmonic, power factor assessment value and other items, with user-friendly interface.

4.8 Connect to SCADA and PLC system through RS485 communication interface, provide product communication protocol, and directly connect with mainstream industrial control configuration software for data transmission.

5. Main technical parameters

Item	NWK1-GR-16GB
Sampling voltage	AC380V±20% or AC (100~800) V, independent auxiliary power supply
Sampling current (A)	0.05~5
Rated frequency (Hz)	45~65
Range of CT ratio	5/5~6000/5
COSΦ switch-on threshold	Settable between 0.85L~0.85C
switch-off threshold	Settable between 0.85L~0.85C
Delay in switching (S)	2~180
Overvoltage threshold (V)	100~800
Undervoltage threshold (V)	75~620
THDV threshold	Off / (3~90)%
Capacitor configuration (kvar)	Set the capacity of each circuit
Capacitor discharge delay (s)	0~240
Zero sequence threshold (%)	Off
Alarm output (S)	Off / (10~300) / Normally on
Fan start-up (℃)	Off / 35~65
High temperature alarm (℃)	Off / 50~85
Large screen main interface	Off/On
Password protection	Off/On
Date change	None
Time change	None
Relay contact output	AC220V, 5A, fastest response speed: 2 seconds;
Active DC output	+ 12V DC, 100mA, fastest response speed: 2 seconds, or dynamic response: 100 milliseconds
Power consumption (W)	≤8
Maximum number of output circuits	12 circuits, 16 circuits
Restore to factory settings	Off/On

6. Configuration of main models

Model	Number of circuits	Sampling voltage (V)	Output mode	Functional Characteristics
NWK1-GR-12GB	12	100-800	Relay contact	Basic type + RS485 + subharmonic + alarm
NWK1-GR-12GBD	12	100-800	+12V DC	Basic type + RS485 + subharmonic
NWK1-GR-16GB	16	100-800	Relay contact	Basic type + RS485 + subharmonic
NWK1-GR-16GBD	16	100-800	+12V DC	Basic type + RS485 + subharmonic

Note: When the control signal outputs +12V DC, the control object is ZCK smart combination switch or TSC thyristor switch.

«Электро-Профи» - www.ep.ru

7. Introduction of panel functions

7.1 Boot screen



7.2 Automatic main interface

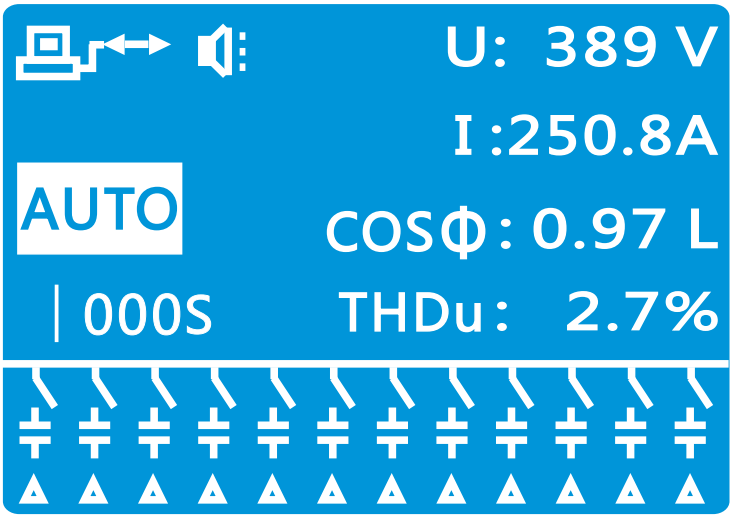

H

«Электро-Профи» - www.ep.ru

8. Product wiring diagram

8.1 Common compensation controller NWK1-GR-12GB / NWK1-GR-16GB (relay contact output, applicable to AC 127V / 220V, 220V / 380V or three-phase 660V power grid systems)

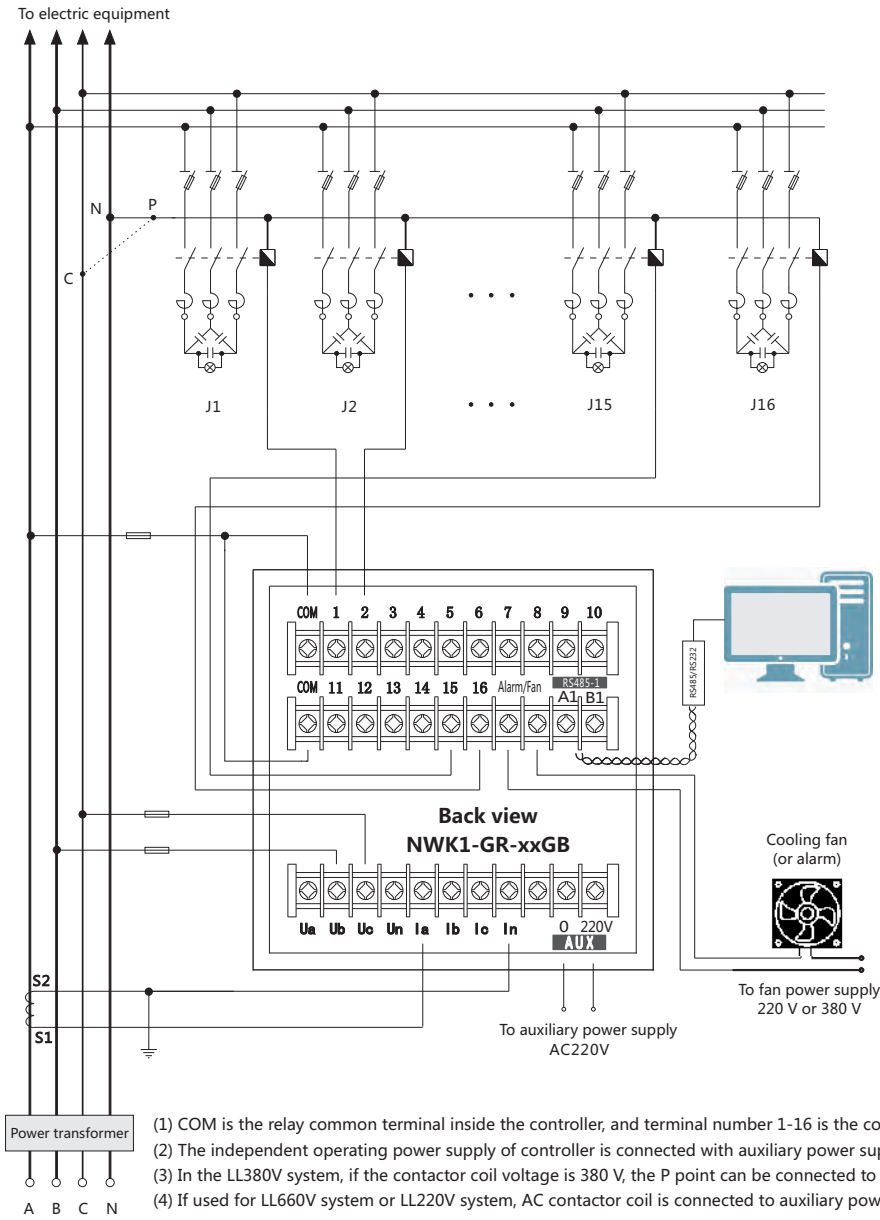

(1) COM is the relay common terminal inside the controller, and terminal number 1-16 is the control output.
(2) The independent operating power supply of controller is connected with auxiliary power supply AC 220V.
(3) In the LL380V system, if the contactor coil voltage is 380 V, the P point can be connected to C phase instead of N phase.
(4) If used for LL660V system or LL220V system, AC contactor coil is connected to auxiliary power supply AC220V.

«Электро-Профи» - www.ep.ru

9. Product installation and overall dimensions

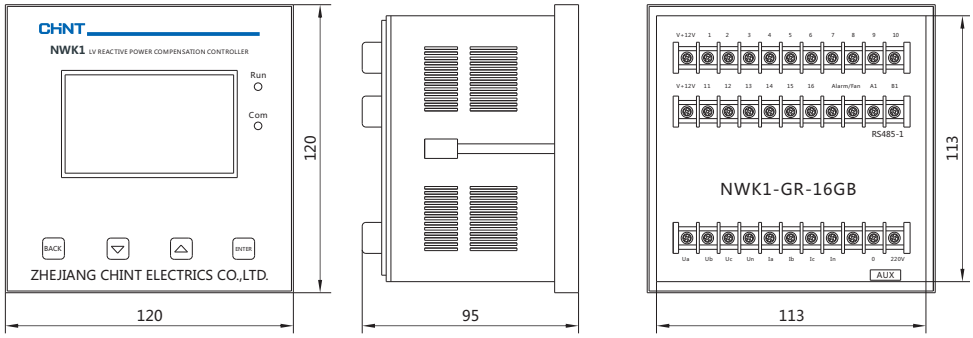

Overall dimension: 120 mm × 120 mm × 95 mm, embedded hole size: 113 mm × 113 mm

10. Ordering information

When ordering, users are responsible for selecting the compensation type, rated voltage, number of output circuits, control signal output mode (default relay output, suffix D represents +12VDC), etc. If the product exceeds the operating condition and main technical parameters, it can be ordered through negotiation.

For example: Order NWK1-GR-16GB, 10 sets.

It indicates ordering NWK1-GR series low-voltage reactive compensation controller, with common compensation type, 16 channels, control signal relay output, RS485 communication and data transmission function, and the ordering quantity is 10 sets.

H

«Электро-Профи» - www.ep.ru

Transformer

Stable & reliable for power conversion



«Электро-Профи» - www.ep.ru



«Электро-Профи» - www.ep.ru

Low Voltage VT & AVR & CT & PT

Control Transformers



NDK
Control Transformer

Page P-001



JBK5
Control Transformer

Page P-004



SG
Three-phase Air-immersed Transformer

Page P-006



CKSG
Series Low-voltage Series-connected Reactor

Page P-009

Automatic AC Voltage Regulators



TND1/TNS1
Automatic AC Voltage Regulator

Page P-011



TND3
Automatic AC Voltage Regulator

Page P-014



TND6
Automatic AC Voltage Regulator

Page P-016



TM
Ultra-low Voltage Automatic AC Voltage Regulator

Page P-019



TNDZ(DBW)
TNSZ(SBW)
Pillar Type AC Automatic Regulator with Compensated

Page P-022



DBW-JW
SBW-JW
Industrial-grade Contactless Intelligent Voltage Stabilizer

Page P-025

Current Transformers



BH-0.66 I
Current Transformers

Page P-030



SDH-0.66II
Current Transformers

Page P-035



BH-0.66III
Current Transformers

Page P-038



RCT
Current Transformers

Page P-043



MES
Current Transformers

Page P-045

Uninterruptible Power Supply



PC-UPS
Series Backup Uninterruptible Power Supply

Page P-047



HP-UPS
Series Online Uninterruptible Power Supply

Page P-050



GP-UPS
Series Online Uninterruptible Power Supply

Page P-054

«Электро-Профи» - www.ep.ru



NDK Control Transformer

1. General

1.1 Frequency: AC 50Hz/60Hz;

1.2 Application: for control power supply of apparatus, partial illumination and indicator light of machine tool and other mechanic equipments.

1.3 Standard: Q/ZT258.

2. Type designation

N D K - □

- Rated output capacity (VA): 25VA~5000VA
- Control
- Single-phase
- Company code

3. Operating conditions

3.1 Temperature: -5℃~+40℃, the average value within 1 month should not exceed +30℃ and not exceed +20℃ within 1 year;

3.2 Altitude: ≤2000m;

3.3 Relative humidity: ≤95%

4. Features

The transformer is characterized by excellent performances, reliable operation, compact design, safe wiring, and wide application, etc.

«Электро-Профи» - www.ep.ru

5. Technical data

Model	Capacity (VA)	Rated input voltage(V)	Rated output voltage(V)	Frequency (Hz)
NDK-25	25	230, 400	6, 12, 24, 36, 110, 127, 230, 400	50/60
NDK-50	50			
NDK-100	100			
NDK-150	150			
NDK-200	200			
NDK-250	250			
NDK-300	300			
NDK-400	400			
NDK-500	500			
NDK-700	700			
NDK-1000	1000			
NDK-1500	1500			
NDK-2000	2000			
NDK-3000	3000			
NDK-4000	4000			
NDK-5000	5000			

Note: Customized products are available.

6. Overall and mounting dimensions

NDK(BK)-25VA~1000VA



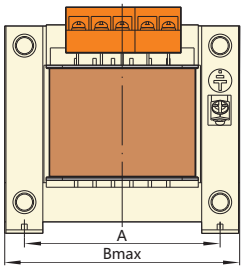

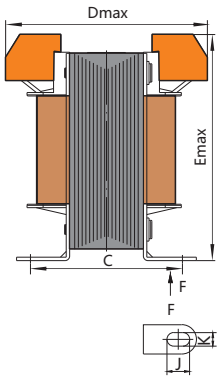

NDK(BK)-1500VA~5000VA



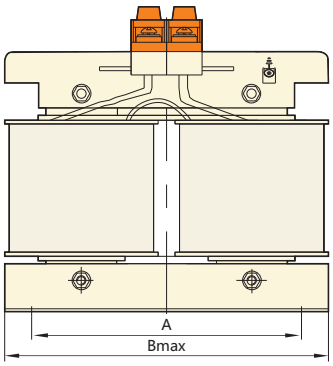

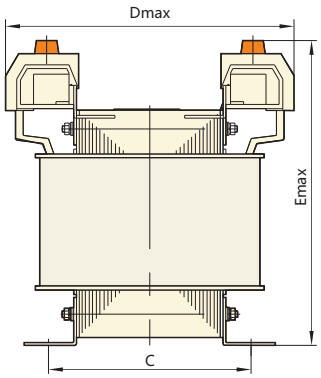

I

«Электро-Профи» - www.ep.ru

Model	Mounting dimensions (A×C) (mm)	Mounting holes (K×J) (mm)	Overall dimensions (B×D×E) (mm)
NDK-25	62.5×50	5×8	80×83×82
NDK-50	70×58	6×10	85×89×84
NDK-100	85×64	6×10	103×93×99
NDK-150	85×72	6×10	103×100×99
NDK-200	85×83	6×10	103×112×99
NDK-250	100×80	8×11	130×120×150
NDK-300	100×84	8×11	130×125×150
NDK-400	110×114	8×11	148×155×153
NDK-500	110×114	8×11	148×155×153
NDK-700	125×103	8×11	173×158×174
NDK-1000	125×123	8×11	173×186×174
NDK-1500	160×120	10×20	265×195×270
NDK-2000	160×130	10×20	265×205×280
NDK-3000	160×140	10×20	265×220×305
NDK-4000	190×160	10×20	315×240×305
NDK-5000	190×180	10×20	315×260×305

7. Wiring

7.1 NDK-100, capacity: 100VA, input 400V 230V, output 36V 24V 12V 6V

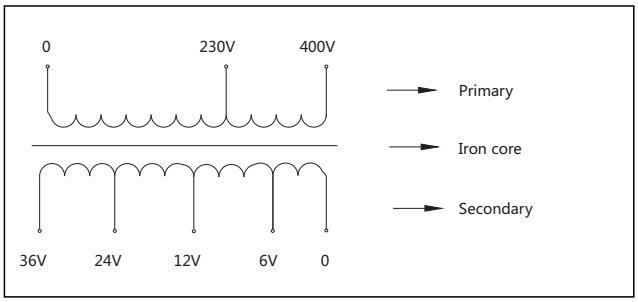

7.2 NDK-100, capacity: 100VA, input 400V, output 36V; capacity 60VA 12V; capacity 40VA

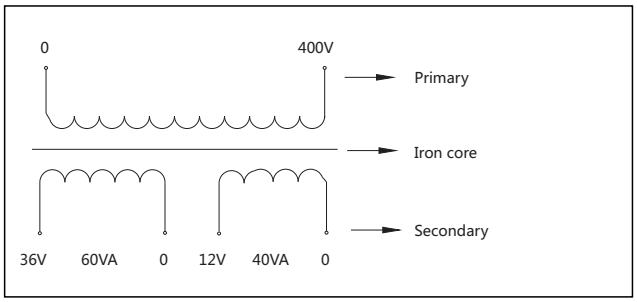

7.3 NDK-100, capacity: 100VA, input 400V, output 36V 12V

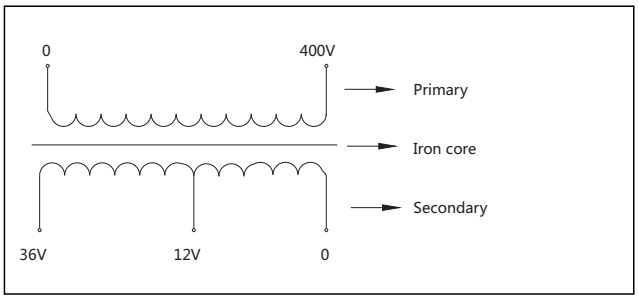

7.4 NDK-100, capacity: 100VA, input 400V, output 36V

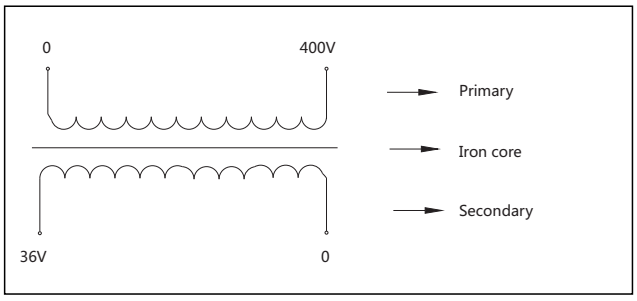

«Электро-Профи» - www.ep.ru



JBK5
Control Transformer

1. General

1.1 Application: JBK5 series control transformers are suitable for AC circuit of 50Hz/60Hz, used as control sources for various mechanical equipment and general electrical appliances, and used as power supplies for work lighting and signal lamps.

1.2 Standard: Q/ZT205

2. Type designation

JB K 5 - □ / □

- Product code for the tropical zone: "H" humid tropics, "A" dry tropical zone
- Rated capacity: 40VA~2500VA
- Design sequence No.
- Control
- Machine tool transformer

3. Operating conditions

3.1 Temperature: -5℃~+40℃,
should not exceed +35℃ the average value within 24 hours.
If the lowest limit is -10℃ or -25℃, please declared.

3.2 Altitude: ≤2000m;

3.3 Relative humidity ≤90%, when the average lower limit value is under +25℃ within the month;
≤50% when the temperature is +40℃.
And when lower temperature;
the humidity could be relatively higher.
But the teaperature is lower, the humidity higher.

4. Features

We always adopt gas argon arc welding for the connection among iron cores and between iron core and clamping piece (mounting piece) of JBK5 series control transformers, which enables the product to be an entirety, so that the structure is more reasonable and reliable.

In addition, the products have advantages of reliable operation, low dissipation of energy, compact volume, safe wiring, wide applicability, etc.

«Электро-Профи» - www.ep.ru

5. Overall and mounting dimensions

JBK5-40~630, JBK5-800(Vertical)



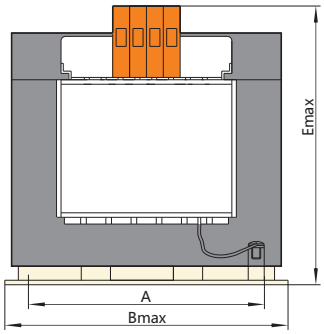

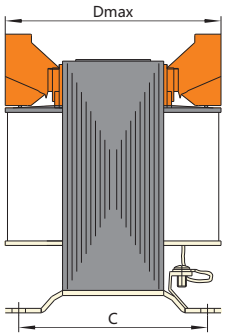

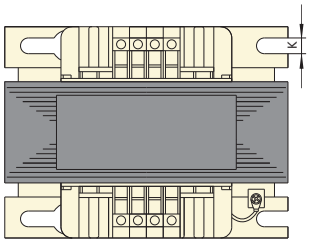

JBK5-800(Horizontal), JBK5-1000~2500 Type



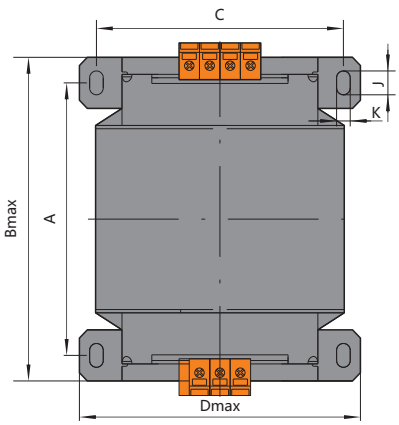

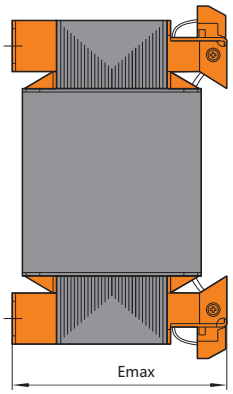

Dimension (mm) / Item / Capacity (VA)	Overall dimensions (mm)			Mounting dimensions (mm)		Mounting holes (mm)
	B max	D max	E max	A	C	K
40~63	79	78	92	66	46	4.8
100	85	95	97	72	62	4.8
160	97	96	105	84	73.5	5.8
250	97	110	105	84	85	5.8
300	122	106	130	93	76	7
400	122	110	130	100	85	7
500	122	125	130	90	98	6
630	151	116	150	130	90	7
800(Vertical)	152	132	150	126	104	7
1000	230	170	156	160	142	7×14
1600	258	185	168	180	155	7×14
2500	285	210	175	210	175	7×14

«Электро-Профи» - www.ep.ru



SG Three-phase Air-immersed Transformer

1. General

SG series Three-phase Air-immersed Transformer, is natural cooling indoor, it is applicable to the circuit of AC 50Hz~60Hz, 1000V and below. It can be used in control power of machine tool and mechanical equipment small type power as well as work lighting and signal lamp power.

2. Type designation

S G - □/□

- Voltage grade (kV)
- Rated capacity(kVA)
- Normal cooling type
- Three-phase

3. Operating conditions

3.1 Altitude not exceed2000m.

3.2 Ambient temperature within-5℃~+40℃.

3.3 Relative humidity: less than 95%.

3.4 In the ambient, there should not has the gas that corroding metal, destroying insulation. The transformer should not be corroded by water, rain or snow.

4. Features

The transformers have two body types: exposed and fence. It has the advantage of low consumption, low noise, better performance against fire and free of pollution etc. The shell of the protective type is made of steel plate, the transformer is in the shell. There are several holes outside the shell to installation the power lines In addition, this type can add the monitor meter of the voltage and current according to the customer's request, And if the capacity is above 80KVA, it can also add the axial flow fan or wheels for moving.

«Электро-Профи» - www.ep.ru

5. Overall and mounting dimensions

5.1 The outline of SG series exposed dry cooling type transformer (as sheet, fig.1)

5.2 The outline of SG series fence dry cooling type transformer (as sheet, fig.2, fig.3, fig4, fig.5)

Exposed type

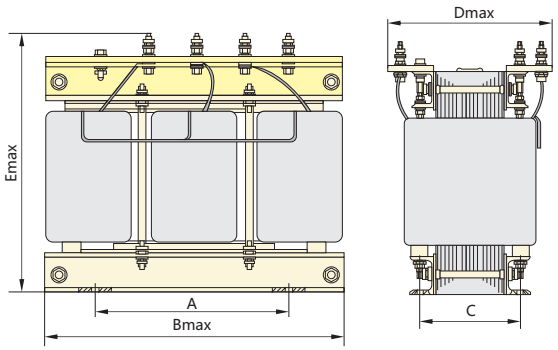

Fence type (0.3kVA~3kVA)

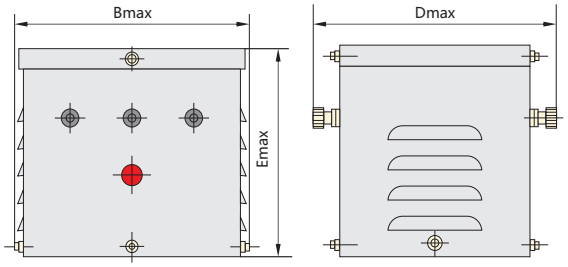

Fence type (4kVA~20kVA)

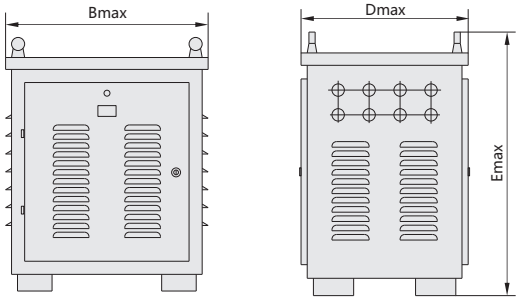

Fence type (30kVA~60kVA)

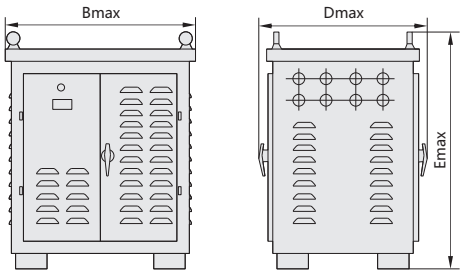

Fence type (80kVA~300kVA)

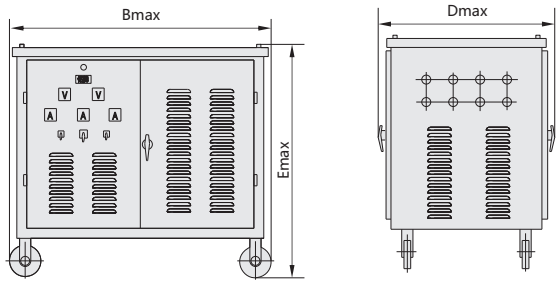

«Электро-Профи» - www.ep.ru

Model	Capacity	Voltage (V)		Connecting mark	Overall dimensions (mm)										
		Input	Output		Exposed			Fence			Exposed		Fence		Mounting holes
					Bmax	Dmax	Emax	Bmax	Dmax	Emax	A±5	C±5	A±5	C±5	
SG-0.15	0.15				200	120	190	220	240	225	125	64	-	-	
SG-0.3	0.3				200	120	190	220	240	225	125	64	-	-	6×12
SG-0.5	0.5				200	125	190	220	240	225	125	74	-	-	
SG-0.75	0.75				250	146	240	300	280	265	150	96	-	-	
SG-1	1				250	156	240	300	280	265	150	106	-	-	
SG-1.5	1.5		380	Yyno (Y/Yo)	330	220	290	390	355	300	220	103	-	-	8×16
SG-2	2				330	220	290	390	355	300	220	103	-	-	
SG-2.5	2.5				330	240	290	390	355	300	220	120	-	-	
SG-3	3				330	240	290	390	355	300	220	120	-	-	
SG-4	4				400	340	360	550	440	600	280	125			
SG-5	5	400	220	Yd (Y/△)	400	340	380	550	440	600	280	125			10×20
SG-6	6				400	340	380	550	440	600	280	125			
SG-8	8				450	350	400	580	470	620	280	136			
SG-10	10				480	370	450	620	470	680	310	150			
SG-15	15				530	380	480	680	470	700	310	155			Φ13
SG-20	20	380		Dy (△/Y)	550	390	480	680	470	700	310	160			
SG-30	30				730	440	570	900	630	800	420	275			
SG-40	40				770	450	570	970	640	830	420	275			
SG-50	50				810	470	670	1000	640	900	420	300			
SG-60	60	220		Dd (△/△)	870	490	710	1060	680	950	420	300			12.5×25
SG-80	80				930	520	720	1140	890	1180	420	310	with weels		
SG-100	100				970	530	770	1190	900	1260	420	320	with weels		
SG-150	150				960	580	750	1200	990	1300	640	350	with weels		
SG-200	200				1000	600	830	1280	1010	1320	680	370	with weels		
SG-300	300				1150	750	1000	1480	1020	1480	750	460	with weels		Φ16

Note:

1. The dimensions of the above only for reference, when the input current is more than 300A, the customer need to order specially, and the size will change correspondingly.
2. You can choose the rated input/output voltage in the sheet arbitrarily according to the demand.
3. The voltage and size out of the sheet, should confer with consumer on their demand.
4. SG-80kVA and above fence type transformer body have wheels and fan cooling system, with ammeter and voltmeter, as fig.5.
5. SG-4kVA~60kVA fence type transformer only have body, with one indicator light of power, as fig.3, fig.4.
6. SG-0.3kVA~3kVA fence type transformer' s wiring terminals are outside, with an indicator light of power, as fig.2.

6. Ordering information

6.1 product designation: three-phase normal-type transformer

6.2 product type

6.3 output capacity: 20kVA

6.4 frequency: 50Hz

6.5 rated input voltage (line-to-line voltage):380V

6.6 rated output voltage (line-to-line voltage):220V

6.7 connection mode: input is "Y", output is "△" or Mark Y/△

6.8 exposed or fence: exposed

«Электро-Профи» - www.ep.ru



CKSG Series Low-voltage Series-connected Reactor

1. Main usages and applicable scope

This series of low-voltage series-connected reactors (hereinafter referred to as reactor) are suitable for using in combination with capacitors to suppress and absorb harmonics, protect capacitors, avoid the impact of harmonic current and surge voltage and current, improve the quality of power grid, increase power factor as well as extend the life time of capacitors.

2. Product model and meaning

CKSG-□/□-□

- Resistance rate
- Nominal voltage: kV
- Nominal capacity: kvar
- Dry-type
- S: three-phase, D: single-phase
- Series-connected reactor

3. Normal working conditions and installation conditions.

3.1 Altitude should not exceed 2000 m.

3.2 Max. ambient temperature: 40 °C , min. ambient temperature: -25 °C.

3.3 Relative air humidity: air humidity ≤ 50% at 40 °C ambient temperature, air humidity ≤ 90% at 20 °C ambient temperature.

3.4 There is no contamination and explosive media that seriously affect the insulation of the reactor, and no harmful corrosive gas or dust in the ambient air. The reactor should not be eroded by water, rain or snow during the use.

3.5 There is no significant shake and shock vibration on the installation site.

4. Product form and structure

Reactors can be divided into three-phase and single-phase types, both of them are dry-type iron-core reactors.

4.1 The product structure of three-phase three-limb is used, in which the core limb is divided into several even pieces via multiple air gaps.

4.2 The clamps of reactor have been subject to anti-corrosion treatment. The key clamps are made of non-magnetic materials. The overall unit has undergone a process of pre-baking, vacuum paint dipping as well as heat drying and curing, in order to cast coil and iron core into one piece, thereby reducing the temperature rise and noise during the operation.

«Электро-Профи» - www.ep.ru

5. Wiring methods shown in connection diagram

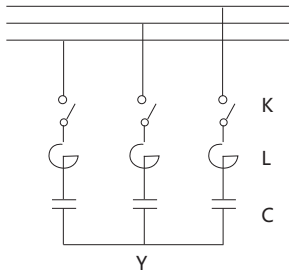

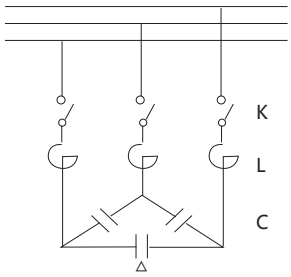

6. Shape and installation dimensions

For the shape and installation dimensions of reactors please refer to Figure 1 and Table 1.

Table 1

Specifications	Capacity of capacitor kvar	Nominal capacity kvar	Dimensions(mm)			Installation(mm)	
			Bmax	Dmax	Emax	A	C
CKSG-0.7/0.4-7	10	0.7	240	160	185	200	85
CKSG-0.85/0.4-7	12	0.85	240	160	185	200	85
CKSG-0.98/0.4-7	14	0.98	240	160	185	200	85
CKSG-1.05/0.4-7	15	1.05	240	160	185	200	85
CKSG-1.12/0.4-7	16	1.12	240	170	185	200	95
CKSG-1.4/0.4-7	20	1.4	240	170	185	200	95
CKSG-1.75/0.4-7	25	1.75	240	170	185	200	95
CKSG-2.1/0.4-7	30	2.1	240	170	185	200	95
CKSG-2.45/0.4-7	35	2.45	250	180	185	210	110
CKSG-2.8/0.4-7	40	2.8	250	200	185	210	120
CKSG-3.15/0.4-7	45	3.15	250	205	185	210	125
CKSG-3.5/0.4-7	50	3.5	250	210	185	210	135
CKSG-4.2/0.4-7	60	4.2	280	210	220	235	125
CKSG-4.9/0.4-7	70	4.9	322	220	320	138	150
CKSG-5.6/0.4-7	80	5.6	322	230	320	138	160

Note: In addition, there are various voltage levels, such as 0.45, 0.48kV, 0.525kV, 0.66kV, 0.69kV.
Various resistance rates, such as 1%, 4.5%, 5%, 6%, 12%, 13%, 14%, etc.

7. Ordering instructions

Users should specify following points when they purchase products:
(1) The basic model, size and quantities of reactors
(2) Nominal current, nominal voltage, inductance, resistance rate and insulation class
(3) Environmental conditions
(4) Shape and installation dimensions for reference only. If the required size needs to be changed, it can be specified at the time of ordering.

«Электро-Профи» - www.ep.ru



TND1 Single-phase Automatic AC Voltage Regulator
TNS1 Three-phase Automatic AC Voltage Regulator

1. General

1.1 Application:
TND1/TNS1 series full-automatic AC voltage regulator collects sample and amplifies it and automaticly control circuit, and drives the servomotor to rotate the rocker arm and brush in required direction, and finally adjusts the output voltage to the rated value, finally reaches the aim of stabilizing the voltage. It can be widely used in areas, where the mains voltage often comes across sharp fluctuation or sharp seasonal variation, such as industrial production, scientific research medical treatment & hygiene, household electrical appliances, it can provide any loads with excellent power supply.

1.2 Features: Elegant appearance, compact structure, light weight, low power waste, complete protection functions, stable and reliable, low output waveform distortion and so on.

2. Type designation

TN□1 -□/□

- Cooling type. AN means: convective cooling (AN will be omitted in model description); AF means: draw out the hot-air with fan or blow on the product direct.
- Rated capacity of regulator (kVA)
- Design serial number
- D: single-phase, S: three-phase
- Automatic voltage regulator (high precise automatic AC voltage regulator)

3. Operating conditions

3.1 Ambient temperature: -5℃~+40℃.

3.2 Relative humidity ≤90%(at +20℃).

3.3 Altitude: ≤2000m.

3.4 Working environment: Indoors, be free from chemical deposition, dirt, harmful corrosive medium, or flammable or explosive gas.

«Электро-Профи» - www.ep.ru

4. Technical data

Model	TND1	TNS1
		
No. of phase	single	three
Input voltage (V)	160V~250V	280V~430V(3-phase, 4-lines)
Output voltage (V)	220V±4%	380V±4%(3-phase, 4-lines)
Frequency (Hz)	50-60	
Adjusting time(s)	≤6s when the input voltage changes within the range of 20V	
harmonic distortion	No additional distortion	
Output over-voltage protection setting value	246±4V	Phase voltage 246±4V
Output under-voltage protection setting value	180±8V	Phase voltage 180±8V

5. Features

5.1 Output capacity

The relation between output capacity and input voltage refer to as fig. 1

When input voltage is less than 198V, the output capacity of product will decrease, the working capacity of stabilizer shall come down;

when you choose output voltage of 110V, the output capacity shall be no more than 60% rated capacity,to prevent overload.

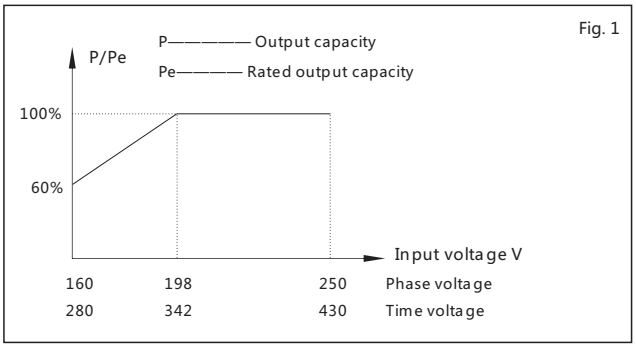

Fig. 1

5.2 Overload capacity

The stabilizer is not allowed to work overload for long time, when the input phase voltage fluctuate within 198V ~ 250V (line voltage from 342V ~ 430V), at emergent case, it is allowed to work as specified in sheet 1.

«Электро-Профи» - www.ep.ru

6. Overall dimensions and weights

Phase number	Model & Spec.	Overall dimensions (mm)	Packing dimensions (mm)	Pcs	Weight (kg)	Gross weight (kg)
Single-phase	TND1-0.5	195×205×150	436×234×182	2	9	10
	TND1-1	215×240×170	506×270×200	2	12.2	14
	TND1-1.5	215×240×170	506×270×200	2	13	15.2
	TND1-2	225×290×220	336×268×258	1	8.5	9
	TND1-3	245×305×240	366×295×266	1	12.5	13
	TND1-5	225×350×285	389×270×318	1	15.7	16.2
	TND1-10/AF(vertical)	285×320×520	400×420×610	1	38.5	47
	TND1-10(horizontal)	245×430×375	310×475×410	1	33	35.5
	TND1-15/AF	325×430×620	420×535×720	1	58.5	70
	TND1-20/AF	325×430×620	420×535×720	1	71.5	83
	TND1-30/AF	402×735×803	510×840×970	1	140	156
Three-phase	TNS1-1.5	490×325×160	534×758×208	1	16	16.5
	TNS1-3	490×325×160	534×758×208	1	19.5	20
	TNS1-4.5	490×325×160	534×758×208	1	21.5	22
	TNS1-6	275×355×620	360×475×715	1	33.5	40.5
	TNS1-9	330×360×730	420×475×825	1	46	54
	TNS1-15	330×420×840	420×530×930	1	60.5	70
	TNS1-20	480×465×930	565×580×1020	1	110	127
	TNS1-30/AF	480×465×930	565×580×1020	1	115	132
	TNS1-45/AF	480×790×1055	600×885×1220	1	191	214
	TNS1-60/AF	480×790×1055	600×885×1230	1	230	253

7. Ordering information

a. Input and output of three-phase products of this series are of three-phase four-wire connected, please wire them with neutral line before using.
Example of type selection: Three-phase motor 2.2kW 1pcs, 5.5kW 1pcs, when selecting the voltage regulator, its capacity should be ≥(2.2kW+5.5kW)×2.5=19.25kVA, so, the selected product should be three-phase SVC-20kVA at least.

b. When the three-phase voltage regalator is applied to single-phase or three-phase , max capacity of each phase should be one third of rated capacity.

c. When the input phase voltage is lower than 198V, the output capacity of voltage regulator will be reduced, then the loads should be reduced correspondingly, otherwise, it may be overloaded; when the output voltage is 110V, then the output capacity should not be beyond 50% of rated capacity, otherwise, it may be overloaded. Please refer to fig.1 for detail characters.

Sheet 1 Safe consult coefficient of choosing regulator capacity

Load kind	Consumer samples	Safe coefficient	Chosen capacity rate
Complete resistive loads	Incandescent lamp, resistant coil, electric cooker	1.1~1.3	> 1.1~1.3 times of total rated capacity
Inductive, capacitive loads	Fluorescent lamp, fan, pump, air-conditioner, refrigerator and etc.	2.5~3	> 2.5~3 times of total rated capacity

«Электро-Профи» - www.ep.ru



TND3 Automatic AC Voltage Regulator

1. General

Application: TND3 series automatic AC voltage regulator supplys power for equipment such as computers, duplicating machines, industrial precision equipment, medical apparatuses, household electrical appliances, etc.

2. Type designation

TN D 3-□

- Rated capacity
- Design sequence No.
- Single-phase
- Automatic voltage regulator

3. Operating conditions

3.1 Ambient temperature: -5℃~+40℃.

3.2 Relative humidity ≤90%(at +20℃).

3.3 Altitude: ≤2000m.

3.4 Working environment: Indoors,
be free from chemical deposition, dirt,
harmful corrosive medium, or flammable or explosive gas.

I

«Электро-Профи» - www.ep.ru

4. Technical data

Model		TND3-3	TND3-5	TND3-7
Rated output capacity (kVA)		3	5	7
Range of rated input voltage (V)		160~250	160~250	160~250
Over load protective current (input) (A)		15	25	32
Rated output voltage (V)	220V Voltage stabilizing accuracy	±4%	±4%	±4%
	110V Voltage stabilizing accuracy	±8%	±8%	±8%
	Over-voltage protection	246±4V	246±4V	246±4V
	Under-voltage protection	180±8V	180±8V	180±8V
Delay time	Short delay	5±2s	5±2s	5±2s
	Long delay	5±2min	5±2min	5±2min

5. Features

a. The voltage stabilizer can work uninterruptedly, with advantages of low waveform distortion, stable voltage regulation, no instantaneous power failure, it guarantees the safety and normal operation of top-grade household appliances and computers that with memory function, its accuracy of output voltage stabilization is 220V±4% adjustable.

b. Novel style, elegant appearance:
The product adopts wall-mounted structure, which enables it to possess convenient installation and small space occupying area. The soft color and streamline outline seem to melt into modern

c. Wide range of input voltage, strong load characteristic.

d. Complete functions such as over-voltage and under-voltage indication and protection, long time delay, short time delay, etc.

e. Utility power/ voltage stabilization switching function, direct utility power also is available if it is necessary.

f. There are 220V and 110V two circuits for rated output voltage;

g. Indication of input and output voltage.

h. Carbon brush: It adopts the latest developed carbon brush. that has high performance, which sharply prolongs the service life of voltage stabilizer.

6. Outline & installation size shown as fig.1 and table1

Fig.1 Outline & installation size diagram

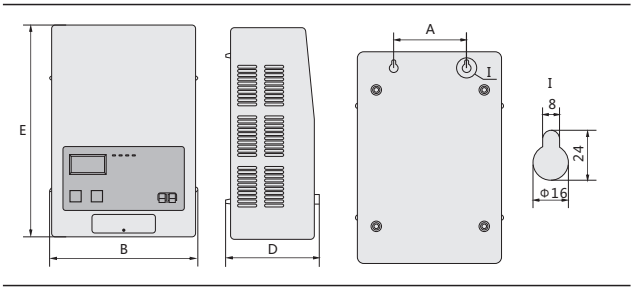

Table 1 Outline & installation size

Model & spec.	Outline size (mm)			Installation size (mm)	Net weight (kg)
	Bmax	Dmax	Emax	A±3	
TND3-3	265	170	400	135	11.2
TND3-5	285	795	440	135	14.4
TND3-7	285	185	440	135	22.5
TND3-10	445	200	310	135	28

7. Ordering information

7.1 When the loads are capacitive or inductive, as the load has heavy pickup current, please select the voltage stabilizer whose capacity is 2.5~3 times of load power.

7.2 When the input phase voltage is lower than 198V, the output capacity of voltage stabilizer will be reduced, then the loads should be reduced correspondingly, otherwise, it may be overloaded;
when the output voltage is 110V, then the output capacity should not be beyond 50% of rated capacity, otherwise, it may be overloaded.
Refer to fig. 2 for specific characteristics.

Fig. 2 Curve of rated output capacity

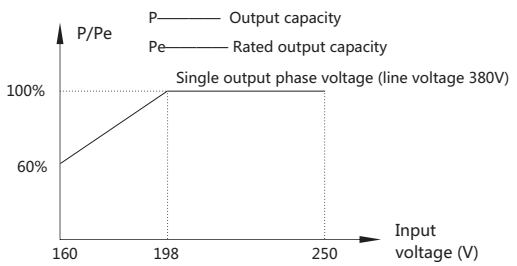

«Электро-Профи» - www.ep.ru



TND6 Automatic AC Voltage Regulator

1. General

TND6 automatic AC voltage regulator is a contact voltage stabilizer with wide input voltage range. It is an upgrade product designed according to the principle of TND1 series voltage stabilizer. It is the closed-loop control system that consists of voltage stabilizer specially designed or transformer and controller or control circuit to complete the voltage stabilization function through driving the brush by the servo motor. The main characteristic of the TND6 series voltage stabilizer is wide input voltage range which is 130V(110V)~250V (input voltage range of TND1 series voltage stabilizer is 160V~250V); it can ensure the output voltage is stabilized at about 220V. TND6 series voltage stabilizer can be used in industrial production, scientific research, public facilities, medical science, household appliances and other fields, provide stable power supply for the load and ensure normal operation of the electrical equipment. And it is suitable for areas with large voltage fluctuation of power network or large seasonal variation of the voltage of the power network.

Standard compliant: Q/ZT 78.

2. Type designation

TN D 6- □ / □

- Cooling mode: AN means that air is a cooling way of natural convection; default to this type if the product is not indicated. AF means the cooling way of extracting internal air with an electric fan or directly blowing the product cold
- Rated capacity, kVA
- Design serial number
- Phase number: D-single phase; S-three phase
- Automatic AC voltage regulator

3. Operating conditions

3.1 Altitude of the installation site is no more than 2000m.

3.2 Environmental temperature: -5℃~+40℃. Upper limit of the ambient air temperature of the installation is +40℃, and its average temperature value in 24 hours shall not exceed +35℃. Lower limit of the ambient air temperature of the installation is -5℃.

Note: When the user needs to use the voltage stabilizer in the environment above +40℃ or below-5℃, he shall declare to the manufacturer.

3.3 Relative humidity: The relative humidity of the air is no more than +50% when the maximum temperature is + 40 ℃; higher relative humidity may be allowed at lower temperatures, for example: 90% at 20℃.
Special measures shall be taken for the condensation occasionally produced due to temperature changes.

3.4 Installation environment shall be well ventilated and free from apparent impurity, corrosive gas, dust, combustible material and gas. In the air of the installation environment, there shall be no corrosive and harmful gas or dust damaging to insulation; in the use, the voltage stabilizer shall not be eroded by water, rain and snow.

3.5 Ventilation shall be maintained around the installation site, and enough heat dissipation space shall be reserved around the installation site (generally, the reserved space shall be greater than or equal to 0.5m). Plastic cover, cloth and other inflammable materials are forbidden to cover the regulated power supply or debris is not allowed to put on it to prevent overheating of the regulated power supply and damaging.

3.6 The voltage stabilizer shall be horizontally installed; and there shall be no significant shake and shock vibration at the installation site.

3.7 For indoor use, output terminal of the voltage stabilizer shall not be used in parallel.

3.8 Power voltage waveform is similar to sine wave.

«Электро-Профи» - www.ep.ru

4. Main parameters and technical performance

4.1 Main parameters and technical performance

Table 1

Type specification	Rated capacity (kVA)	Rated output current (A)	Frequency (Hz)	Rated input voltage (V)	Input voltage range (V)	Rated output voltage and accuracy (V)	Output over- voltage protection value (V)	Output capacity curve
TND6-0.5	0.5	2.3	50/60	220	110~250	220(±4%)	246±4	Figure 1
TND6-1	1	4.5						
TND6-1.5	1.5	6.8						
TND6-2	2	9.1						
TND6-3	3	13.6						
TND6-5	5	22.7						
TND6-10/AF	10	45.5	50/60	220	130~250	220(±4%)	246±4	Figure 2
TND6-15/AF	15	68.2						

4.2 Output capacity curve

When the input voltage of the single-phase regulated power supply is lower than 198V, output capacity of the product is reduced and the product must be used after reducing the capacity.

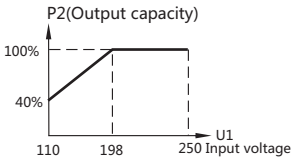

Figure 1 Output capacity curve

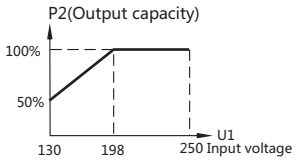

Figure 2 Output capacity curve

5. Product features

5.1 Wide input voltage range: the input voltage range is 130V(110V) ~ 250V, and the output voltage is 220V× (1±4%)

5.2 Strong load-carrying capacity; it can carry 50% of the rated load during the input at a low voltage of 130V

5.3 Low voltage stabilization function: it can still output 220V at the lowest input voltage of 130V(110V).

5.4 Voltage and current parameters are displayed on the digital instrumentation, clear and intuitive.

5.5 It has the overheat protection function. Patent designed circuit-breaker device is used as the input breaking switch which can automatically cut off the power at the input terminal of the voltage stabilizer.

5.6 It adopts the patent design of "dual protection system for output and input", overheat protection breaking input, overvoltage and under voltage protection breaking output; complete protection functions make the protection more thoroughly.

5.7 Wide applicable load types; suitable for areas with large voltage fluctuation of power network or low voltage of power network.

6. Installation dimensions

Table 2

Type specification	Physical dimension (mm) Width (max) x Depth (max) x Height (max)	Package size (mm) Width (max) x Depth (max) x Height (max)	Pcs/package	Net weight (kg)	Gross weight (kg)
TND6-0.5	195×200×140	223×205×165	1	4.2	4.4
		425×235×187	2		9
TND6-1	213×225×160	260×250×200	1	5.7	5.9
		505×280×205	2		12
TND6-1.5	213×225×160	260×250×200	1	6.5	6.8
		505×280×205	2		14
TND6-2	225×285×215	330×260×260	1	8.5	9
TND6-3	245×310×230	360×300×270	1	12.5	13
TND6-5	260×345×245	300×380×280	1	18.5	19
TND6-10/AF	305×345×520	395×460×660	1	46	56.5
TND6-15/AF	325×435×605	415×540×735	1	71	85

Note: Above parameters are for reference; for the concrete parameters, take in kind as the standard. No prior notice will be given for any change.

«Электро-Профи» - www.ep.ru

7. Ordering information

For your safety, please read the following selection requirements and notes carefully when ordering:

a. This product is not suitable for overload conditions. In the region where the grid voltage is generally low, attention shall be paid to the use of effective capacity which shall be reduced proportionally: i.e., the lower the input voltage, the smaller the electrical load. When the input voltage is lower than 198V, output capacity of the regulated power supply will be reduced, so the load shall be reduced to avoid overload. For its relationship, refer to "Figure 1, Output capacity curve".

b. Generally, regulated power supply shall be reasonably selected according to the rated frequency, startup surge current, inductive or capacitive load of the electrical equipment. Its output capacity shall be left with sufficient margin; especially in the impact load selection, the margin shall be greater. For the specific selection safety factor, see Table 3.

Table 3

Load property	Equipment type	Safety factor	Select regulated power supply capacity
Pure resistive load	Incandescent lamp, resistance wire, electric furnace and other equipment	1.1~1.3	≥1.1~1.3 times total load power
Inductive and capacitive loads	Fluorescent lamp, fan, pump, air conditioning, refrigerator etc.	2.5~3	≥2.5~3times total load power

c. There is a high voltage in the voltage stabilizer. Non-professionals do not open the case to avoid getting an electric shock.

d. The voltage stabilizer must be reliably grounded to ensure the use safety.

e. The voltage stabilizer shall be placed in a ventilated, dry room. The using environment shall be free of corrosive gases, vapors, conductive dust and explosive substances, as well as violent vibration.

g. The voltage stabilizer is forbidden to be used in parallel. Output terminals of two or more voltage stabilizers shall not be used in parallel or series.

h. When the product is working, carbon brush in the machine for pressure regulating produces arc spark. It is forbidden to place this machine in a flammable and explosive place (such as: oil depot, fireworks factory etc.).

«Электро-Профи» - www.ep.ru



TM Ultra-low Voltage Automatic AC Voltage Regulator

1. General

TM series ultra low-voltage automatic AC voltage stabilizer is a kind of stabilizer which adopts the sampling control system composed of digital integrated circuit, controls electromagnetic relay and changes the tap of auto-transformer, so as to achieve stable output voltage. The outstanding advantage of the product is to have the voltage stabilizing function of inputting ultra low voltage and achieving a wide range of input voltage.

This product is widely used in office equipment of various industries and household refrigerators, freezers, electric fans, air conditioners, TVs, computers and other electrical appliances and applies to communication, medical care, lighting system and other electrical places, especially to some areas where electrical appliances do not work properly which is caused by too high or too low grid voltage. It can automatically adjusts the voltage to the proper range, to ensure the normal use of electrical appliances.

Product standard: Q/ZT 648.

2. Type designation

TM - □

- Rated capacity, kVA
- Self-coupled voltage-adjusting step voltage regulator

3. Operating conditions

3.1 Ambient temperature: -5℃~+40℃

3.2 The installation site elevation does not exceed 3000m.

3.3 Work environment: the installation environment has no obvious contamination; the interior has no chemical depositions, dirts, hazardous aggressive media and flammable, explosive gases.

3.4 Ventilation should be maintained around the installation site; enough space should be left for heat dissipation around the installation (generally the reserved space should be greater than or equal to 0.5m). It is prohibited to use plastic cover, cloth and other flammable items for covering the regulated power supply or to place sundries on the power supply, in order to avoid overheating damage to regulated power supply .

3.5 During installation, it is prohibited to place it onto the plastic components of refrigerators, freezers and other appliances, in order to avoid overload heating of the voltage stabilizer to make plastic surfaces of appliances heat to cause deformation.

«Электро-Профи» - www.ep.ru

Fig. 1 Output capacity curve

When the voltage inputted by single-phase stabilized power supply drops below 198V, the output capacity of the product will be reduced and the product must be used after reducing capacity.

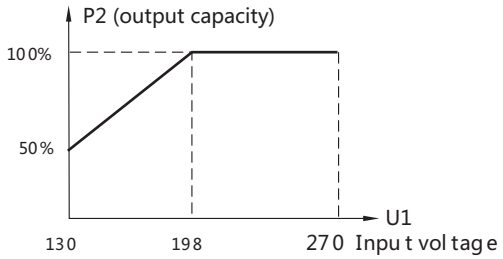

4. Technical data

Table 1 Technical data

Model specification	Rated capacity kVA	Rated output current A	Frequency Hz	Rated input voltage V	Input voltage range V	Rated output voltage and precision V	Output over-voltage protection value V	Installation method
TM-0.5	0.5	2.3	50	220	130~270& 95~270	220 (±10%)	246±4	Desk type
TM-1	1	4.5						
TM-1.5	1.5	6.8						
TM-2	2	9.1						
TM-3	3	13.6						Wall-mounted, desk type
TM-5	5	22.7						
TM-8	8	36.4						
TM-10	10	45.5						

Note: If need more wider input voltage range (50~270A), it can be customized.

5. Product features

5.1 The product adopts relay for fast switching and voltage regulating, with the characteristics of reliable operation, fast reaction speed, no waveform distortion and strong instantaneous overload capacity.

5.2 Strong anti-overload, overvoltage capability. When the load is overweight, it has the functions of automatic protection and cutting off the output power. When the grid voltage exceeds the input range of the voltage stabilizer and high voltage is inputted, it can also quickly cut off the output, to ensure the safety of electrical equipment of users.

5.3 The effective input voltage range is AC 130V-270V. When the grid voltage changes from 130V to 270V, its output voltage is always maintained within 220V±10%, therefore, it is particularly suitable for use in the occasion of grid voltage fluctuating within this range.

5.4 It uses LCD screen to display the input and output voltage values, with the characteristic of clear, intuitive, accurate readings.

5.5 It adopts excellent circuit design and is made from high-quality raw materials and parts. Thus this series of products have low failure rate, long service life,safe and reliable operation.

5.6 TM-3~10 are equipped with two kinds of working states of "mains "and "steady". When the voltage of AC is normal, "mains" switch can be turned on to make the voltage stabilizer operate in "mains" state; at this time, loss of the straight-through output terminal of AC power supply can be further reduced.

6. Outline overall and installing dimensions

Model and specification	Outline dimension (mm) Width max. × depth max. × height max.	Packing size (mm)	Piece / package	Net weight (kg)	Gross weight (kg)
TM-0.5	165×275×96	215×352×146	1	2.7	3.1
TM-1	165×275×96	215×352×146	1	2.9	3.3
TM-1.5	165×275×96	215×352×146	1	4.0	4.4
TM-2	185×295×105	225×370×150	1	5.3	5.7
TM-3	260×380×155	308×430×195	1	9.9	10.7
TM-5	295×410×195	353×455×215	1	14.8	15.8
TM-8	295×410×195	353×455×215	1	18.8	19.8
TM-10	450×320×205	505×388×254	1	21.5	22.8

The above dimensions and weights are for reference only.

The product after improvement is subject to local change involved without prior notice.

«Электро-Профи» - www.ep.ru

7. Ordering information

For your safety, please read carefully the following selection requirements and precautions when ordering:

a. This product should not be used under overload conditions. In areas with generally low grid voltage, attention should be paid that the use of effective capacity shall be proportionately reduced, that is, the lower the input voltage, the smaller the electric appliance (load) shall be. When the input voltage drops below 198V, the output capacity of the regulated power supply will be reduced, thus it must be used after reducing the load, in order to avoid overload. Refer to "Fig.1 Output capacity curve" for its relationship.

b. Under normal circumstances, regulated power supply shall be reasonably selected according to the rated power, start surge current, inductive or capacitive loads of the electrical equipment in selection. Its output capacity should allow sufficient margin; especially in impact load selection, margin should be greater.
For example, air conditioners, freezers, refrigerators and other household appliances require large start-up current at start moment. Generally, power of the voltage stabilizer should be more than 3 times the rated power of the used appliances; otherwise, it will not conducive to the normal work of household appliances.

c. There exists high voltage within the voltage stabilizer. Non professional personnel is not asked to open the casing so as to avoid the electric shock.

d. The voltage stabilizer must be earthed reliably. AC socket connected with the input plug of the voltage stabilizer must be equipped with reliable earth wire to ensure the safe use. The power plug should be pulled off or wiring removed for safekeeping if never used.

e. The voltage stabilizer should be placed indoor for ventilation and drying. The use environment should be free of corrosive gases, vapors, conductive dusts, explosive substances and violent vibration.

f. Do not use plastic cover, cloth and others for covering the voltage stabilizer or place sundries on the voltage stabilizer in order to avoid the overheating of the voltage stabilizer and being damaged. The voltage stabilizer should be placed in a well-ventilated location, for better heat dissipation.

g. It is prohibited to use the voltage stabilizer in parallel. Output terminals of two or several voltage stabilizers shall not be used in parallel or in series.h.When the product is operating, switching of the relay contacts in the machine may produce arc spark. It is prohibited to use this machine in the combustible and explosive places (e.g. oil depot, fireworks factory etc.).

«Электро-Профи» - www.ep.ru



TNDZ(DBW), TNSZ(SBW) Pillar Type AC Automatic Regulator with Compensated

1. General

Application: used in the application requiring stable voltage, such as telecommunication, broadcasting & TV, elevator, silicone controlled apparatus, numerical control machine tool, and various production lines, etc.

2. Type designation

TN □ Z(□BW)-□

- Rated capacity kVA
- DBW is originally model of single-phase
  SBW is originally model of three-phase
- Pillar iron core
- Phases: D means single-phase S means three-phase
- Auto-regulator

3. Operating conditions

3.1 Temperature: -5℃~+45℃;

3.2 Altitude:≤1000m;

3.3 Relative humidity: 15%~90%(20℃).

I

«Электро-Профи» - www.ep.ru

4. Technical data

Model	Rated capacity (kVA)	Phase	Frequency (Hz)	Input voltage range	Rated output voltage	Accuracy of regulate voltage	The protect value of output over-voltage	The protect value of output under-voltage	Response time	Rated output current (A)
TNDZ(DBW)-20	20	1	50 ~ 60	176 ~ 264	220	±(1±5)%	242 ± 2.2	198 ± 2.2	When input voltage steps 15V,the output response time≤1.5s	91
TNDZ(DBW)-30	30									136
TNDZ(DBW)-50	50									227
TNSZ(SBW)-30	30	3	50 ~ 60	304 ~ 456	380	±(1±5)%	418 ± 3.8	342 ± 3.8	When input voltage steps 25V,the output response time≤1.5s	46
TNSZ(SBW)-50	50									76
TNSZ(SBW)-75	75									114
TNSZ(SBW)-100	100									152
TNSZ(SBW)-150	150									228
TNSZ(SBW)-180	180									273
TNSZ(SBW)-200	200									304
TNSZ(SBW)-225	225									342
TNSZ(SBW)-250	250									380
TNSZ(SBW)-300	300									456
TNSZ(SBW)-320	320									486
TNSZ(SBW)-350	350									532
TNSZ(SBW)-400	400									608
TNSZ(SBW)-450	450									684
TNSZ(SBW)-500	500									760

Note1: It is no the function of output under voltage what eigibility item when normal regulations product ex-facture, unless the customer request.

Note2: If have other requires you can discuss with manufacture.Such as output voltage is 400V, or output voltage three-phase 220V, and the range of regulate voltage between ±3% can negotiate to order.

5. Features

5.1 When fault of phase sequence by power supply or maintenance of transformer, the voltage regulator will automatically check and adjust to ensure the normal working of the regulator.

5.2 Adoption of new technology can reduce contactors to increase the reliability of voltage regulator.

5.3 With over-voltage protection and alarming
When the voltage is stable, the input voltage is beyond the threshold(456V) or output voltage beyond the threshold(426V±7V),the voltage regulator will cut the power supply and alarm until the input and output voltage reduce to the normal value.

5.4 With the function of automatic start when power supply resumes.

5.5 With starting delay.

«Электро-Профи» - www.ep.ru

6. Specifications, overall dimensions and weights

Model	Rated capacity	Overall dimensions (mm)	Net weight (kg)
TNDZ(DBW) single-phase	20kVA	800×610×1380	200
	30kVA	800×610×1380	230
	50kVA	850×690×1450	305
TNSZ(SBW) three-phase	30kVA	750×610×1250	210
	50kVA	800×610×1375	270
	75kVA	850×690×1450	320
	100kVA	850×690×1450	390
	150kVA	1070×940×1740	560
	180kVA	1070×940×1740	625
	200kVA	1150×970×1900	670
	225kVA	1150×970×1900	720
	250kVA	1150×970×1900	770
	300kVA	1250×1020×2050	875
	320kVA	1250×1020×2050	920
	350kVA	1400×1070×2250	945
	400kVA	1400×1070×2250	1045
	450kVA	1400×1070×2250	1350
	500kVA	1400×1070×2250	1400

7. Ordering information

7.1 Considering impact by inrush current, the safety coefficient should be 1.5-3 times. The safety coefficient is determined by the load.

7.2 This product should be connected to the natural line when the input and output circuit is three phase four line.

7.3 The capacity of single phase should be less than 1/3 of the product.

«Электро-Профи» - www.ep.ru



DBW-JW, SBW-JW Industrial-grade Contactless Intelligent Voltage Stabilizer

1. General

This series industrial-grade contactless intelligent voltage stabilizer is divided into single-phase DBW-JW and three-phase SBW-JW. Compared with other forms of voltage stabilizer, it is characterized by large capacity, high efficiency, no waveform distortion, quick voltage regulation response and wide applicable loads. This series of product is set with overvoltage, undervoltage, over current and other protection functions; it is installed easily and operates reliably.
The product adopts the latest DSP arithmetic chip control technology, fast alternating current sampling technology, effective value correction technology, zero current switching technology and fast compensation voltage stabilization technology; it combines the intelligent instrument, quick voltage regulation with fault diagnosis; the product is safe, efficient and precise.

The product is mainly composed of isolation transformer, SCR module, CPU control core and safety protection device; it achieves the control without contacts and is widely applied in large mechanical and electrical equipment, metal processing equipment, production line, elevator, medical apparatus and instruments, embroidery textile equipment, air conditioning, radio and television, household appliances and building lighting and other electrical equipment that needs a stable voltage in the fields of industry, transportation, posts and telecommunications, communications, national defense, railway, research etc.

Standard compliant: YD/T 1270.

«Электро-Профи» - www.ep.ru

2. Type designation

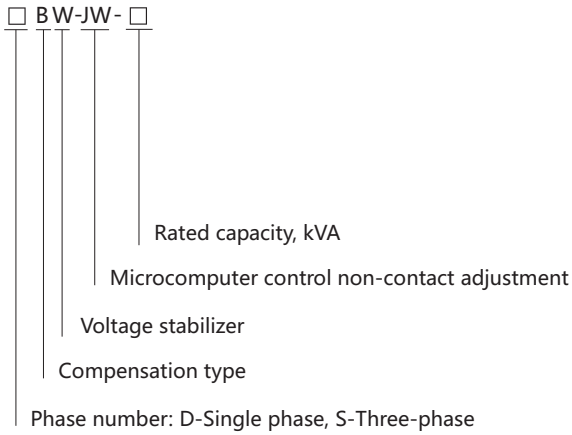

3. Product features

3.1 CUP intelligent control, stable and reliable digital circuit

3.2 Intelligent LCD: Intelligent instrument displays voltage and current effective value in real time; clear, accurate, user-friendly man-machine interface.

3.3 Three-phase modulation; unbalance degree of the output voltage is less than 1%; the accuracy of each phase output voltage is unchanged; no contact, no wear and maintenance-free.

3.4 High-speed response: Voltage stabilization response time is within 40ms; it does not affect the voltage of computer automation, equipment and apparatus.

3.5 High precision: Output voltage accuracy of the product can be set within±1%~±5%; the maximum voltage stabilization accuracy is ±1%.

3.6 Communication interface: The machine is configured with RS-232 communication interface (optional).

3.7 Strong anti-interference and purification ability makes the output power completely pure.

3.8 Wide range of applications: Wide voltage stabilization range can meet the use of premises and equipment with bad power grid quality and large voltage fluctuation range.

3.9 Complete protection functions: It is provided with overload, overvoltage, undervoltage, short circuit and other fault display and protection functions to ensure the safe operation of voltage stabilizer and load.

3.10 Powerful preset functions: overcurrent protection limit can be set arbitrarily.

3.11 Strong adaptability: strong adaptability to power grid and load; reliably, continuously and stably operate under various severe power grids and complex loads

3.12 No distortion in output voltage waveform: Zero current switching technology is adopted; no breaking current, surge current occur in the switching process and the waveform is free of distortion.

3.13 Low loss: power loss is the minimum, and no-load loss is less than 0.5%.

3.14 Bypass function, easy maintenance: it can be switched between "Voltage stabilization" and "Bypass direct supply" to facilitate the use in the trouble maintenance.

«Электро-Профи» - www.ep.ru

4. Working principle block diagram

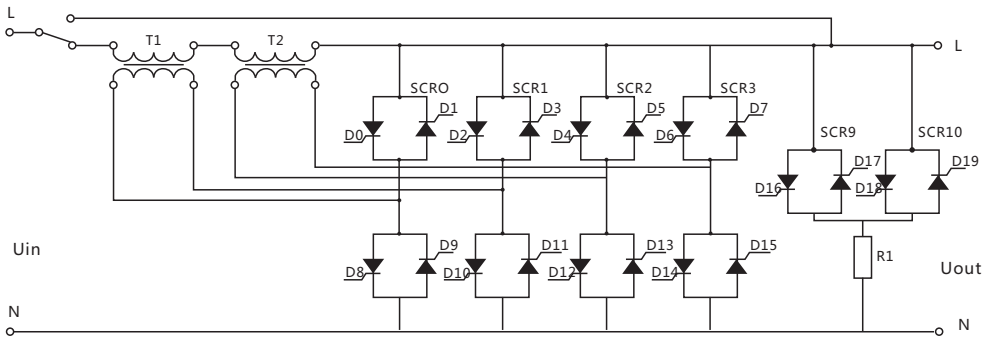

Note: This figure is the one-phase principle block diagram; three-phase principle block diagram is three one-phase principle block diagrams.

5. Normal working conditions and installation conditions

5.1 Upper limit of the ambient air temperature of the installation is +40℃,and its average temperature value in 24 hours shall not exceed +35℃.Lower limit of the ambient air temperature of the installation is -5℃.

5.2 Altitude of the installation site is no more than 2000m (it shall be used after the capacity is reduced when the altitude is more than 2000m).

5.3 The relative humidity of the air is no more than +50% when the maximum temperature is + 40 ℃,higher relative humidity may be allowed at lower temperatures, for example: 90% at 20℃.Special measures shall be taken for the condensation occasionally produced due to temperature changes.

5.4 Indoor use.The environment shall be well ventilated and free of apparent impurity, corrosive gas, dust, combustible material and gas.

5.5 The voltage stabilizer shall be horizontally installed; and there shall be no significant shake and shock vibration at the installation site.

5.6 Output terminal of the voltage stabilizer shall not used in parallel.

Note: Particular service conditions that do not comply with the above provisions shall be determined by the using unit and our company through negotiation.

6. Main parameters and technical performance



Phase number	Single phase	Three phase
Input voltage	220V±15%	380V±15%
Rated output voltage	220V	380V
Frequency	50Hz～60Hz	50Hz～60Hz
Accuracy of voltage stabilization	± (1 ~ 5)% settable	± (1 ~ 5)% settable
Response time	<40 ms	<40 ms
Output overvoltage protection value	(242±2)V	(418±3.5)V
Total harmonic distortion	No additional waveform distortion (static)	
Efficiency	≥98%	
Anti-interference	Arrester, EMI filter, LC filter (optional)	
Over-voltage, under-voltage protection	Output phase voltage over 10%, cut off output or uninterrupted steering bypass	
Liquid crystal display	Voltage, current, abnormal	
Alarm	LED display and sound and light alarm	
Communication interface	RS-232 interface inside the machine (optional)	

Note: The above parameters are for conventional products; users have special requirements can customize the products through consultation.

«Электро-Профи» - www.ep.ru

7. Technical performance comparison



Technical index	DBW-JW、SBW-JW Industrial grade contactless compensated AC voltage stabilizer	TNSZ(SBW)Column compensated AC voltage stabilizer (servo-mechanical)	Inductive voltage stabilizer
Working principle	Use the microcomputer intelligent detection and output instruction to control the fast switching of silicon controlled rectifier (SCR) module; maintain the stability of output voltage through the same frequency, lock phase and sine wave superposition compensation. Fast response, no carbon brush, no contact, no machinery, no spark and three-phase regulation separately.	Change the secondary winding voltage of the compensating transformer depending on the movement of carbon brush rack on the voltage regulating transformer to maintain the stability of output voltage. With carbon brush, contact and mechanical transmission.	Change the relative voltage of input and output by changing the phase angle of the stator and the rotor.
Response time	Fast: Time for stabilizing to the rated voltage≤40ms; may suppress the instantaneous input surge voltage,instantly and effectively protect the precision equipment.	Slow (3 ~ 5)s: Motor adjustment (Mechanical)	Slow (3 ~ 5)s: Belong to lag voltage stabilization; cannot suppress the instantaneous input surge voltage, and difficult to protect the precision equipment.
Parameter setting	Buttons on the display panel can set various parameters.	Can not be set	Can not be set
Three-phase unbalance degree	Conventional products are three-phase products regulated separately with the three-phase voltage automatic balancing function.	Conventional products are three-phase products regulated uniformly without the three-phase voltage automatic balancing function.	Conventional products are three-phase products regulated uniformly without the three-phase voltage automatic balancing function.
Protective response time	20ms protection after the anomaly	Protection time≥10s after the anomaly	Conventional products do not have
Magnetic leakage interference	Nix	Nix	Yes (stator and rotor leakage)
Power network pollution	Nix	Nix	There is surge voltage feeding back to the power grid, and the voltage increases with the increase in the power
Side maintenance cycle	Maintenance-free	Regular maintenance	Regular maintenance

«Электро-Профи» - www.ep.ru

8. Application area block diagram for DBW-JW, SBW-JW Industrial-grade contactless intelligent voltage stabilizer

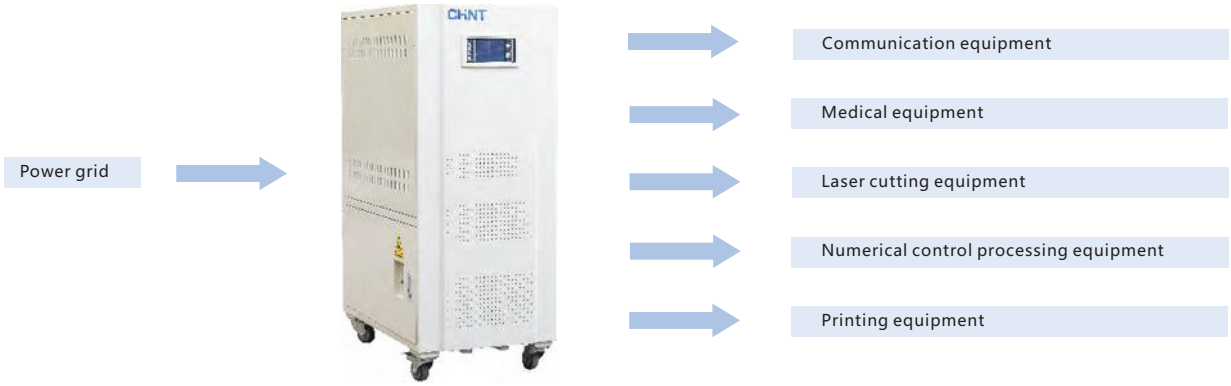

9. Ordering information



9.1 Selection method. Voltage stabilizer is generally selected according to the following formula:
S=PS′ /COSΦ Where： S-Capacity of the voltage stabilizer actually needed;
P- Load power; S′ - Safety factor, COSΦ- Load power factor

9.2 Power factors and safety factors

9.2.1 Pure resistive load: Power factor is 1 (such as: resistance wire, electric furnace etc.); safety factor: 1.1~1.5.

9.2.2 Inductive load: Power factor is generally 0.6~0.8 (such as: elevator, air conditioner, motor type equipment); safety factor: 1.5~3.

9.2.3 Capacitive load: Power factor is generally 0.6~0.8 (such as: computer room, radio and television etc.); safety factor: 1.5~2.

9.2.3 Comprehensive load: Power factor is generally 0.6~0.7 (such as factory, hotel, and household appliances comprehensive load); safety factor: 1.5~2.5

Reference for selection of safety factors: Under the inductive capacitive load environment, safety factors must be carefully selected to ensure the safe operation of products because the large load start current will cause impact to the voltage stabilizer.

«Электро-Профи» - www.ep.ru



BH-0.66 I
Current Transformers

1. General

To be used in combination with measurement instruments: ammeters, watt-hour meters, measurement units, control relays, etc.

2. Operating conditions

2.1 Secondary current Isn: 5A

2.2 Rated voltage Ue:660 V

2.3 Frequency: 50Hz/60Hz

2.4 Operating temperature: -5°C to +40°C, humidity <80%

2.5 Altitude: ≤1000m

2.6 Standards: IEC 61869-2

2.7 Installation type: busbar or plate fixing

3. Type designation

BH-0.66 -□ I

- Category number
- Width of window for bars
- Current transformers series

I

4. Technical data

Model	Transformation ratio(Ipn/Isn) (A)	Power(VA)		Accuracy class			Number of turns through iron core	Overall and installing dimensions (mm)
		1	0.5	0.5S	0.2	0.2S		
 BH-0.66 Solid type	5/5	2.5	2.5					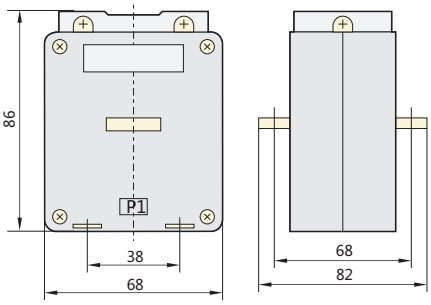
	10/5	2.5	2.5					
	15/5	2.5	2.5					
	20/5	2.5	2.5					
	25/5	2.5	2.5					
	30/5	2.5	2.5					
	40/5	2.5	2.5					
	50/5	2.5	2.5					
	75/5	2.5	2.5					
	5/1	2.5	2.5					
	10/1	2.5	2.5					
	15/1	2.5	2.5					
	20/1	2.5	2.5					
	25/1	2.5	2.5					
	30/1	2.5	2.5					
	40/1	2.5	2.5					
	50/1	2.5	2.5					
	75/1	2.5	2.5					
 BH-0.66 20I	75/5	2.5					1	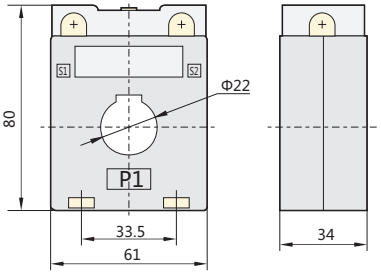
	100/5	2.5					1	
	75/1	2.5	1				1	
	100/1	2.5	1				1	
 BH-0.66 30I	30/5	2.5	2.5				5	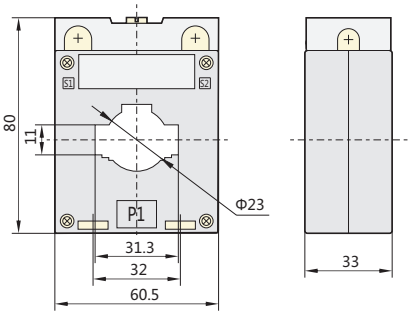
	50/5	2.5	2.5				3	
	75/5	2,5	2.5				2	
	100/5	2.5					1	
	100/5	5	5				2	
	150/5	2.5	2.5				1	
	200/5	5	5				1	
	250/5	5	5				1	
	300/5	5	5				1	
	400/5	5	5				1	
	30/1	2.5	2.5				5	
	50/1	2.5	2.5				3	
	75/1	2.5	2.5				2	
	100/1	2.5	1				1	
	100/1	5	5				2	
	150/1	2.5	2.5				1	
	200/1	5	5				1	
	250/1	5	5				1	
	300/1	5	5				1	

«Электро-Профи» - www.ep.ru

Model	Transformation ratio(Ipn/Isn) (A)	Power(VA)		Accuracy class			Number of turns through iron core	Overall and installing dimensions (mm)
		1	0.5	0.5S	0.2	0.2S		
 BH-0.66 30IB	30/5	5	2.5	2.5	2.5	2.5	5	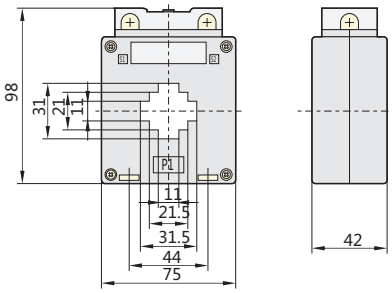
	50/5	5	2.5	2.5	2.5	2.5	3	
	75/5	5	2.5	2.5	2.5	2.5	2	
	75/5	5	2.5	2.5	2.5	2.5	1	
	100/5	5	2.5	2.5	2.5	2.5	1	
	100/5	5	5	5	5	5	2	
	150/5	5	2.5	2.5	2.5	2.5	1	
	200/5	5	5	5	5	5	1	
	250/5	5	5	5	5	5	1	
	300/5	5	5	5	5	5	1	
	30/1	2.5	1				5	
	50/1	2.5	1				3	
	75/1	5	2.5				2	
	100/1	5	2.5				2	
	150/1	5	2.5				1	
	200/1	5	5				1	
	250/1	5	5				1	
 BH-0.66 40I	30/5	2.5	2.5	2.5	2.5	2.5	5	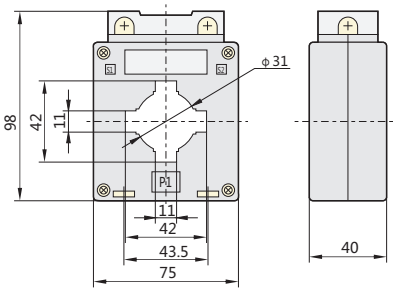
	50/5	2.5	2.5	2.5	2.5	2.5	3	
	75/5	2.5	2.5	2.5	2.5	2.5	2	
	100/5	2.5					1	
	100/5	5	5	5	5	2.5	2	
	150/5	2.5	2.5	2.5	2.5	2.5	1	
	200/5	5	5	5	5	2.5	1	
	250/5	5	5	5	5	2.5	1	
	300/5	5	5	5	5	5	1	
	400/5	5	5	5	5	5	1	
	500/5	10	10	5	5	5	1	
	600/5	10	10	5	5	5	1	
	30/1	5	2.5	5	5	5	5	
	50/1	5	2.5				3	
	75/1	5	2.5				2	
	100/1	5	5				2	
	150/1	5	2.5				1	
	200/1	5	5				1	
	250/1	5	5				1	
	300/1	5	5				1	
	400/1	5	5				1	
	500/1	10	10				1	

I

«Электро-Профи» - www.ep.ru

Model	Transformation ratio(Ipn/Isn) (A)	Power(VA) Accuracy class					Number of turns through iron core	Overall and installing dimensions (mm)
		1	0.5	0.5S	0.2	0.2S		
	150/5	2.5					1	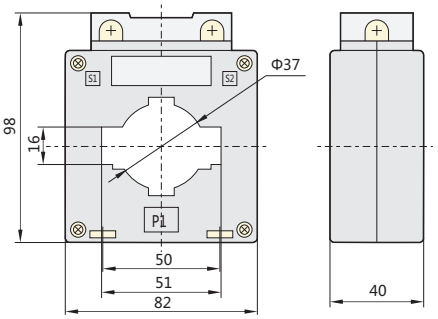
	200/5	5	2.5	2.5	2.5	2.5	1	
	250/5	5	5	2.5	2.5	2.5	1	
	300/5	5	5	5	5	5	1	
	400/5	5	5	5	5	5	1	
	500/5	10	10	5	5	5	1	
	600/5	10	10	5	5	5	1	
	750/5	10	10	10	10	5	1	
	800/5	10	10	10	10	5	1	
	1000/5	10	10	10	10	5	1	
	1200/5	20	20	20	20	5	1	
	150/1	2.5					1	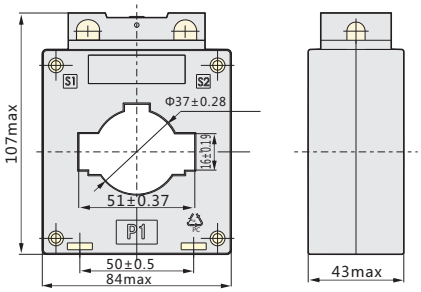
	200/1	5	2.5				1	
	250/1	5	5				1	
	300/1	5	5				1	
	400/1	5	5				1	
	500/1	10	10				1	
	600/1	10	10				1	
	750/1	10	10				1	
	800/1	10	10				1	
BH-0.66 50I	1000/1	10	10				1	(750/5A~1500/5A class 1 class 0.5)
	200/5	5	2.5	2.5	2.5	2.5	1	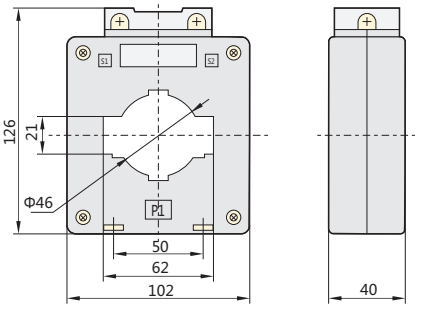
	250/5	5	5	2.5	2.5	2.5	1	
	300/5	5	5	5	5	2.5	1	
	400/5	5	5	5	5	5	1	
	500/5	10	10	5	5	5	1	
	600/5	10	10	5	5	5	1	
	750/5	10	10	10	10	5	1	
	800/5	10	10	10	10	5	1	
	1000/5	10	10	10	10	5	1	
	1200/5	20	20	20	20	5	1	
	1500/5	20	20	20	20	10	1	
	2000/5	20	20	20	20	10	1	
	200/1	5					1	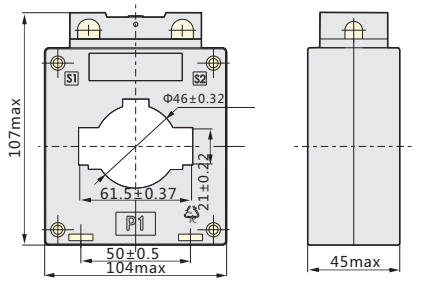
	250/1	5	5				1	
	300/1	5	5				1	
	400/1	5	5				1	
	500/1	10	10				1	
	600/1	10	10				1	
	750/1	10	10				1	
	800/1	10	10				1	
BH-0.66 60I	1000/1	10	10				1	(1500/5A~2000/5A class 1 class 0.5)
	1200/1	20	20				1	

«Электро-Профи» - www.ep.ru

Model	Transformation ratio(Ipn/Isn) (A)	Power(VA) Accuracy class					Number of turns through iron core	Overall and installing dimensions (mm)
		1	0.5	0.5S	0.2	0.2S		
	300/5	5	5	2.5	2.5	2.5	1	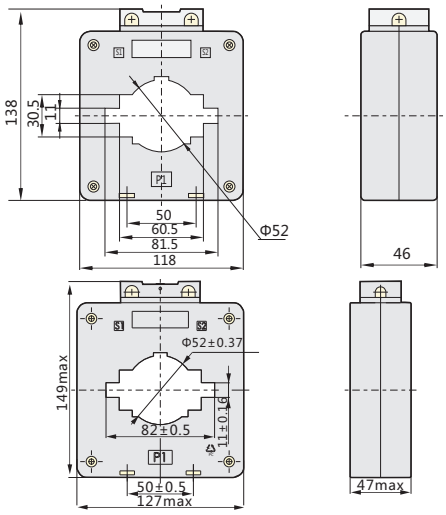
	400/5	5	5	2.5	2.5	2.5	1	
	500/5	10	10	5	5	5	1	
	600/5	10	10	5	5	5	1	
	750/5	10	10	10	10	5	1	
	800/5	10	10	10	10	5	1	
	1000/5	10	10	10	10	5	1	
	1200/5	20	20	20	20	5	1	
	1500/5	20	20	20	20	10	1	
	2000/5	20	20	20	20	10	1	
	2500/5	40	40	40	40	10	1	
	300/1	5	5				1	
	400/1	5	5				1	
	500/1	10	10				1	
	600/1	10	10				1	
	750/1	10	10				1	
	800/1	10	10				1	
BH-0.66 80I	1000/1	10	10				1	
	1200/1	20	20				1	
	1500/1	20	20				1	(2000/5A~2500/5A class 1 class 0.5)
	600/5	10	10	10	10	5	1	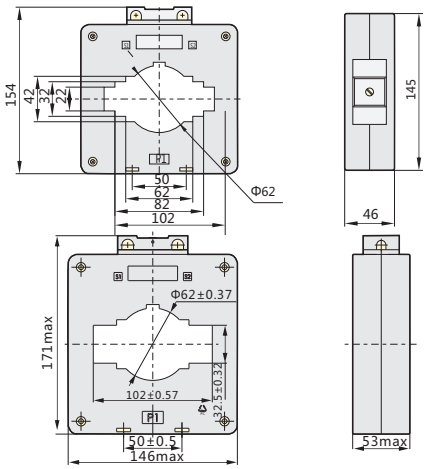
	750/5	10	10	10	10	5	1	
	800/5	10	10	10	10	5	1	
	1000/5	10	10	10	10	5	1	
	1200/5	20	20	20	20	5	1	
	1500/5	20	20	20	20	10	1	
	2000/5	20	20	20	20	10	1	
	2500/5	40	40	40	40	10		
	3000/5	40	40	40	40	10	1	
	600/1	10	10				1	
	750/1	10	10				1	
	800/1	10	10				1	
	1000/1	10	10				1	
	1200/1	20	20				1	
BH-0.66 100I	1500/1	20	20				1	
	2000/1	20	20				1	(2500/5A~3000/5A class 1 class 0.5)
	1000/5	10	10	10	10	5	1	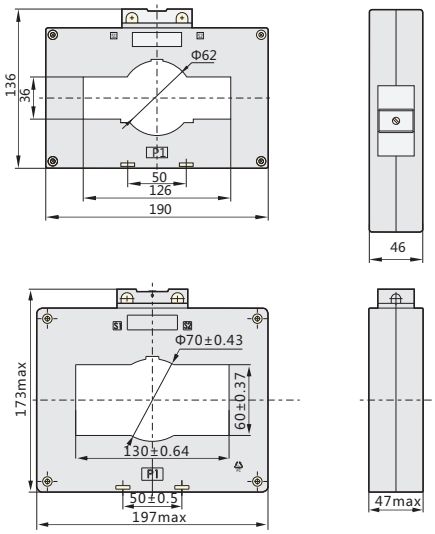
	1200/5	20	20	20	20	5	1	
	1500/5	20	20	20	20	10	1	
	2000/5	20	20	20	20	10	1	
	2500/5	40	40	40	40	10	1	
	3000/5	40	40	40	40	10	1	
	4000/5	40	40	40	40	10	1	
	1000/1	10	10				1	
	1200/1	20	20				1	
	1500/1	20	20				1	
BH-0.66 120I	2000/1	20	20				1	
	2500/1	40	40				1	
	3000/1	40	40				1	(2500/5A~4000/5A class 1 class 0.5)

«Электро-Профи» - www.ep.ru



2. Operating conditions

2.1 Secondary current Isn: 5A

2.2 Rated voltage Ue: 660 V

2.3 Frequency: 50Hz/60Hz

2.4 Operating temperature: -5°C to +40°C, humidity <80%

2.5 Altitude: ≤1000m

2.6 Standards: IEC 61869-2

2.7 Installation type: Busbar or plate fixing

3. Type designation

SDH-0.66 - □ Ⅱ

- Category number
- Width of window for bars
- Current transformer series

SDH-0.66 Ⅱ
Current Transformers

1. General

To be used in combination with measurement instruments:
ammeters, watt-hour meters,
measurement units, control relays, etc.

CE

4. Technical data

Model	Transformation ratio(Ipn/Isn) (A)	Power(VA)		Accuracy class			Number of turns through iron core	Overall and installing dimensions (mm)
		1	0.5	0.5S	0.2	0.2S		
 SDH-0.66 40 Ⅱ	150/5	2.5	2.5	2.5	2.5		1	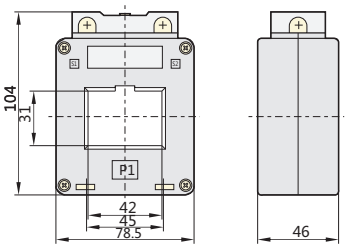
	200/5	5	5	5	5	5	1	
	250/5	5	5	5	5	5	1	
	300/5	5	5	5	5	5	1	
	400/5	5	5	5	5	5	1	
	500/5	10	10	5	5	5	1	
	600/5	10	10	5	5	5	1	
	750/5	10	10	10	10	5	1	
	800/5	10	10	10	10	5	1	
	150/1	5	2.5				1	
	200/1	5	5				1	
	250/1	5	5				1	
	300/1	5	5				1	
	400/1	5	5				1	
	500/1	10	10				1	
	600/1	10	10					

«Электро-Профи» - www.ep.ru

Model	Transformation ratio(Ipn/Isn) (A)	Power(VA)		Accuracy class			Number of turns through iron core	Overall and installing dimensions (mm)
		1	0.5	0.5S	0.2	0.2S		
 SDH-0.66 50 Ⅱ	150/5	2.5					1	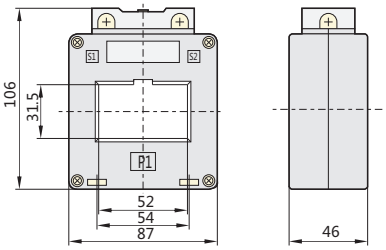 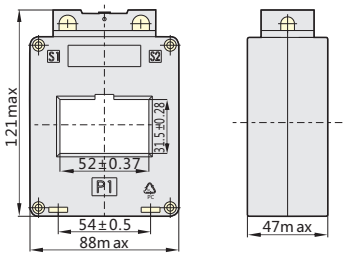 (750/5A~1500/5A class 1 class 0.5)
	200/5	5	5				1	
	250/5	5	5				1	
	300/5	5	5				1	
	400/5	5	5	5	5	5	1	
	500/5	10	10	5	5	5	1	
	600/5	10	10	5	5	5	1	
	750/5	10	10	10	10	5	1	
	800/5	10	10	10	10	5	1	
	1000/5	10	10	10	10	5	1	
	1200/5	20	20	20	20	5	1	
	1500/5	20	20	20	20	10	1	
	150/1	2.5	1				1	
	200/1	5	2.5				1	
	250/1	5	2.5				1	
	300/1	5	5				1	
	400/1	5	5				1	
	500/1	10	10				1	
	600/1	10	10				1	
	750/1	10	10				1	
	800/1	10	10				1	
	1000/1	10	10				1	
  SDH-0.66 60 Ⅱ	200/5	5	2.5				1	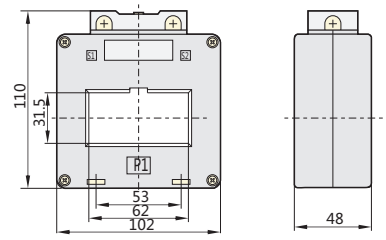 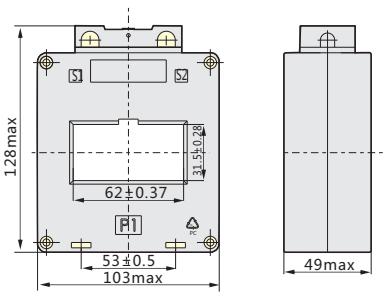 (1500/5A~2000/5A class 1 class 0.5)
	250/5	5	5				1	
	300/5	5	5				1	
	400/5	5	5				1	
	500/5	10	10	5	5		1	
	600/5	10	10	5	5	5	1	
	750/5	10	10	10	10	5	1	
	800/5	10	10	10	10	5	1	
	1000/5	10	10	10	10	5	1	
	1200/5	20	20	20	20	5	1	
	1500/5	20	20	20	20	10	1	
	2000/5	20	20	20	20	10	1	
	200/1	5	5				1	
	250/1	5	5				1	
	300/1	5	5				1	
	400/1	5	5				1	
	500/1	10	10				1	
	600/1	10	10				1	
	750/1	10	10				1	
	800/1	10	10				1	
	1000/1	10	10				1	
	1200/1	20	20					

Model	Transformation ratio(Ipn/Isn) (A)	Power(VA)		Accuracy class			Number of turns through iron core	Overall and installing dimensions (mm)
		1	0.5	0.5S	0.2	0.2S		
 SDH-0.66 80 Ⅱ	600/5	10	10	5	5		1	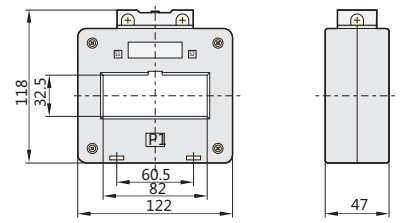 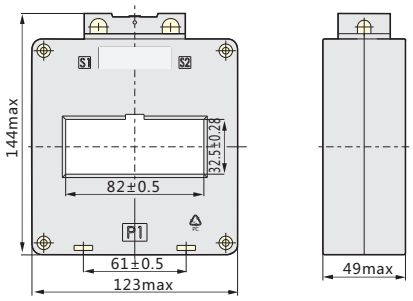 (2000/5A~2500/5A class 1 class 0.5)
	750/5	10	10	5	5		1	
	800/5	10	10	10	10	5	1	
	1000/5	10	10	20	20	5	1	
	1200/5	20	20	20	20	5	1	
	1500/5	20	20	20	20	10	1	
	2000/5	20	20	20	20	10	1	
	2500/5	40	40	40	40	10	1	
	600/1	10	10				1	
	750/1	10	10				1	
	800/1	10	10				1	
	1000/1	10	10				1	
	1200/1	20	20				1	
	1500/1	20	20				1	
  SDH-0.66 100 Ⅱ	1000/5	10	10	10	10	5	1	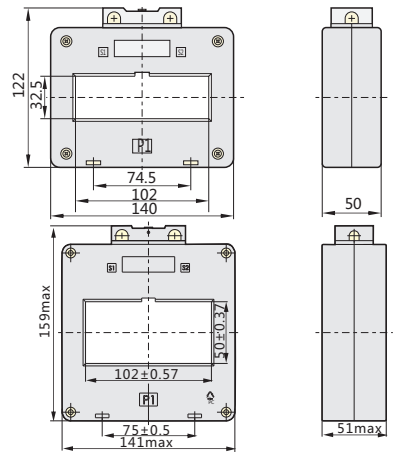 (2500/5A~3000/5A class 1 class 0.5)
	1200/5	20	20	20	20	5	1	
	1500/5	20	20	20	20	10	1	
	2000/5	20	20	20	20	10	1	
	2500/5	40	40	40	40	10	1	
	3000/5	40	40	40	40	10	1	
	1000/1	10	10				1	
	1200/1	20	20				1	
	1500/1	20	20				1	
	2000/1	20	20					
  SDH-0.66 120 Ⅱ	1000/5	10	10	10	10	5	1	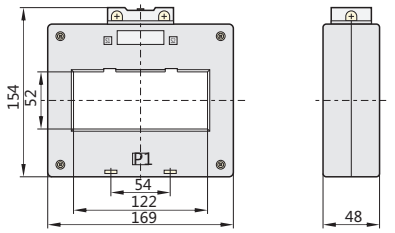 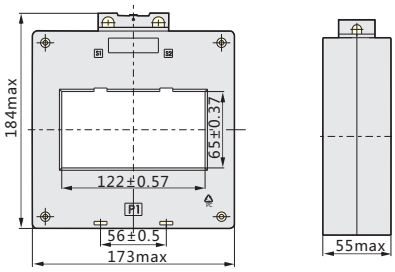 (2500/5A~4000/5A class 1 class 0.5)
	1200/5	20	20	20	20	5	1	
	1500/5	20	20	20	20	10	1	
	2000/5	20	20	20	20	10	1	
	2500/5	40	40	40	40	10	1	
	3000/5	40	40	40	40	10	1	
	4000/5	40	40	40	40	10	1	
	1000/1	10	10				1	
	1200/1	20	20				1	
	1500/1	20	20				1	
	2000/1	20	20				1	
	2500/1	40	40				1	
	3000/1	40	40				1	

«Электро-Профи» - www.ep.ru



BH-0.66 Ⅲ
Current Transformers

1. General

To be used in combination with measurement instruments: ammeters, watt-hour meters,
measurement units, control relays, etc.

2. Operating conditions

2.1 Secondary current Isn: 5A

2.2 Rated voltage Ue: 660 V

2.3 Frequency: 50Hz/60Hz

2.4 Operating temperature: -5°C to +40°C, humidity <80%

2.5 Actitude:≤1000m

2.6 Standards: IEC 61869-2

2.7 Installation type: busbar or plate fixing

3. Type designation

BH-0.66 - □ Ⅲ

- Category number
- Width of window for bars
- Current transformer series

CE

4. Technical data

Model	Transformation ratio(Ipn/Isn) (A)	Power(VA)		Accuracy class		Number of turns through iron core	Overall and installing dimensions (mm)
		1	0.5	0.5S	0.2		
 BH-0.66 20 Ⅲ	75/5	2.5					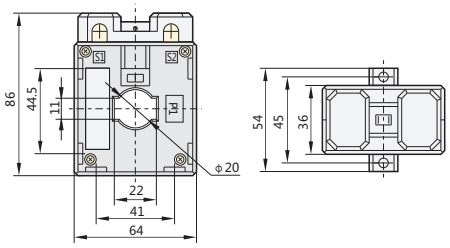
	100/5	2.5					
	150/5	5	5				
	200/5	5	5				
	75/1	2.5	1				
	100/1	2.5	1				
	150/1	10	5				
 BH-0.66 30 Ⅲ	150/5	2.5	2.5	2.5	2.5	1	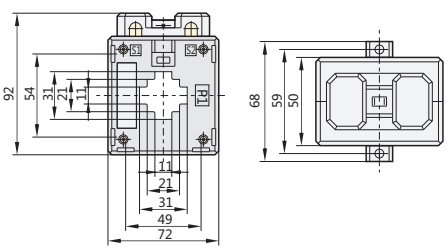
	200/5	2.5	5	5	5	1	
	250/5	5	5	5	5	1	
	300/5	5	5	5	5	1	
	400/5	5	5	5	5	1	
	500/5	10	10	10	10	1	
	150/1	10	5			1	
	200/1	10	5			1	
	250/1	10	5			1	
	300/1	10	5			1	
	400/1	10	5			1	

I

Model	Transformation ratio(Ipn/Isn) (A)	Power(VA)		Accuracy class		Number of turns through iron core	Overall and installing dimensions (mm)
		1	0.5	0.5S	0.2		
 BH-0.66 40 Ⅲ	150/5	5	5			1	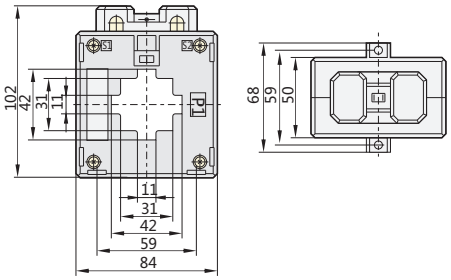
	200/5	5	5			1	
	250/5	5	5			1	
	300/5	5	5	5	5	1	
	400/5	5	5	5	5	1	
	500/5	10	10	10	10	1	
	600/5	10	10	10	10	1	
	750/5	10	10	10	10	1	
	800/5	10	10	10	10	1	
	1000/5	10	10	10	10	1	
	150/1	10	5			1	
	200/1	10	5			1	
	250/1	10	5			1	
	300/1	10	5			1	
	400/1	10	5			1	
	500/1	10	10			1	
	600/1	10	10			1	
	750/1	10	10			1	
	800/1	10	10			1	
 BH-0.66 50 Ⅲ	300/5	5	5			1	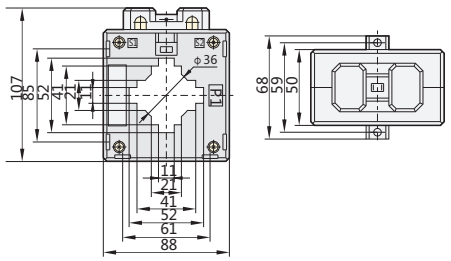
	400/5	5	5			1	
	500/5	10	10	10	10	1	
	600/5	10	10	10	10	1	
	750/5	10	10	10	10	1	
	800/5	10	10	10	10	1	
	1000/5	10	10	10	10	1	
	1200/5	20	20	20	20	1	
	300/1	10	5			1	
	400/1	10	5			1	
	500/1	10	10			1	
	600/1	10	10			1	
	750/1	10	10			1	
	800/1	10	10			1	
	1000/1	10	10			1	
 BH-0.66 60 Ⅲ	500/5	10	10	10	10	1	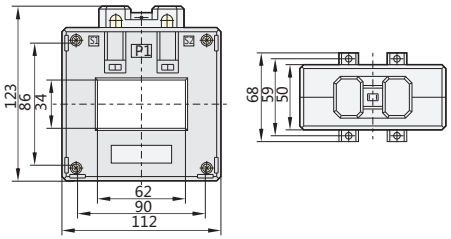
	600/5	10	10	10	10	1	
	750/5	10	10	10	10	1	
	800/5	10	10	10	10	1	
	1000/5	10	10	10	10	1	
	1200/5	20	20	20	20	1	
	1500/5	20	20	20	20	1	
	500/1	10	10			1	
	600/1	10	10			1	
	750/1	10	10			1	
	800/1	10	10			1	
	1000/1	10	10			1	
	1200/1	20	20			1	
 BH-0.66 60Ⅲ×50	500/5	10	10	10	10	1	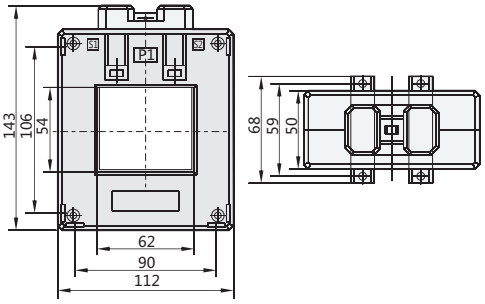
	600/5	10	10	10	10	1	
	750/5	10	10	10	10	1	
	800/5	10	10	10	10	1	
	1000/5	10	10	10	10	1	
	1200/5	20	20	20	20	1	
	1500/5	20	20	20	20	1	
	2000/5	40	40	40	40	1	
	500/1	10	10			1	
	600/1	10	10			1	
	750/1	10	10			1	
	800/1	10	10			1	
	1000/1	10	10			1	
	1200/1	20	20			1	
	1500/1	20	20			1	

«Электро-Профи» - www.ep.ru

Model	Transformation ratio(Ipn/Isn) (A)	Power(VA)		Accuracy class		Number of turns through iron core	Overall and installing dimensions (mm)
		1	0.5	0.5S	0.2		
 BH-0.66 80 Ⅲ	500/5	10	10	10	10	1	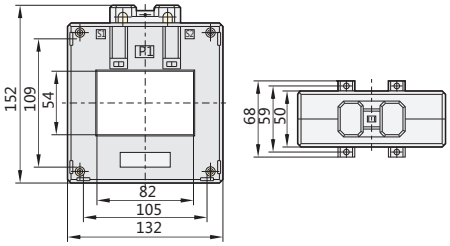
	600/5	10	10	10	10	1	
	750/5	10	10	10	10	1	
	800/5	10	10	10	10	1	
	1000/5	10	10	10	10	1	
	1200/5	20	20	20	20	1	
	1500/5	20	20	20	20	1	
	2000/5	40	40	40	40	1	
	2500/5	40	40	40	40	1	
	500/1	10	10			1	
	600/1	10	10			1	
	750/1	10	10			1	
	800/1	10	10			1	
	1000/1	10	10			1	
	1200/1	20	20			1	
	1500/1	20	20			1	
	2000/1	40	40			1	
 BH-0.66 100 Ⅲ	800/5	10	10	10	10	1	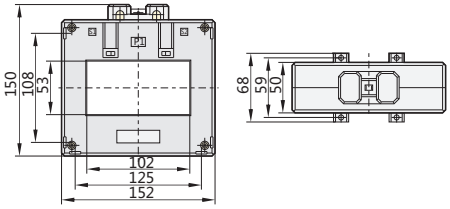
	1000/5	10	10	10	10	1	
	1200/5	20	20	20	20	1	
	1500/5	20	20	20	20	1	
	2000/5	40	40	40	40	1	
	2500/5	40	40	40	40	1	
	800/1	10	10			1	
	1000/1	10	10			1	
	1200/1	20	20			1	
	1500/1	20	20			1	
	2000/1	40	40			1	
 BH-0.66 120 Ⅲ	1000/5	10	10	10	10	1	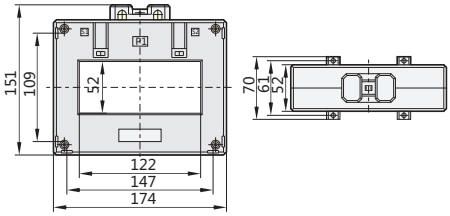
	1200/5	20	20	20	20	1	
	1500/5	20	20	20	20	1	
	2000/5	40	40	40	40	1	
	2500/5	40	40	40	40	1	
	3000/5	40	40	40	40	1	
	4000/5	40	40	40	40	1	
	1000/1	10	10			1	
	1200/1	20	20			1	
	1500/1	20	20			1	
	2000/1	40	40			1	
	2500/1	40	40			1	
	3000/1	40	40			1	

5. Features

5.1 The product is characterized by high accuracy, fewer accessories and easy mounting, etc.

5.2 Made of single or several pieces of enameled wire evenly distributed around the core, secondary winding is characterized by good magnetic conductivity capability, low power consumption, small magnetic-flux-leakage and convenient compensation adjustment.

5.3 Encapsulated in fire-reatardant plastic, the enclosure is characterized by good insulation capacity, high intensity, elegant apperance, light convenient mounting, ect.

«Электро-Профи» - www.ep.ru

6. Installation

The fig below illustrates how the current transformer BH is mounted

Fixing through busbar

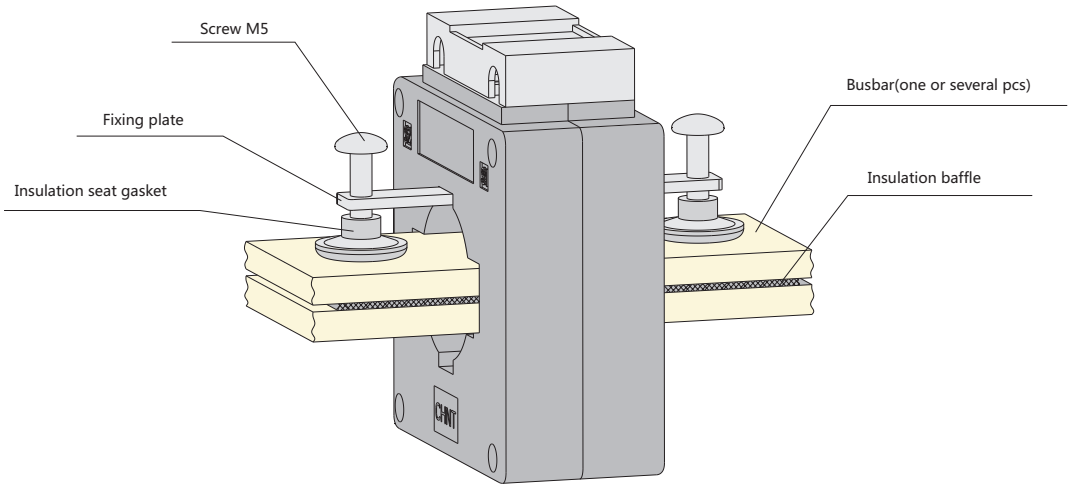

Base mounting

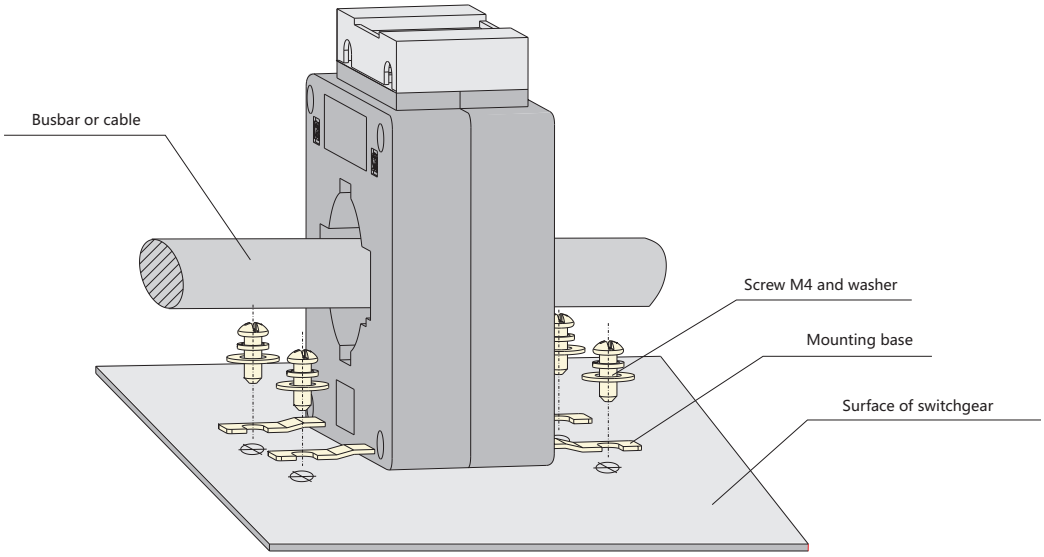

«Электро-Профи» - www.ep.ru

The fig below illustrates how the current transfcrmer BH-0.66 is mounted

Fixing through busbar

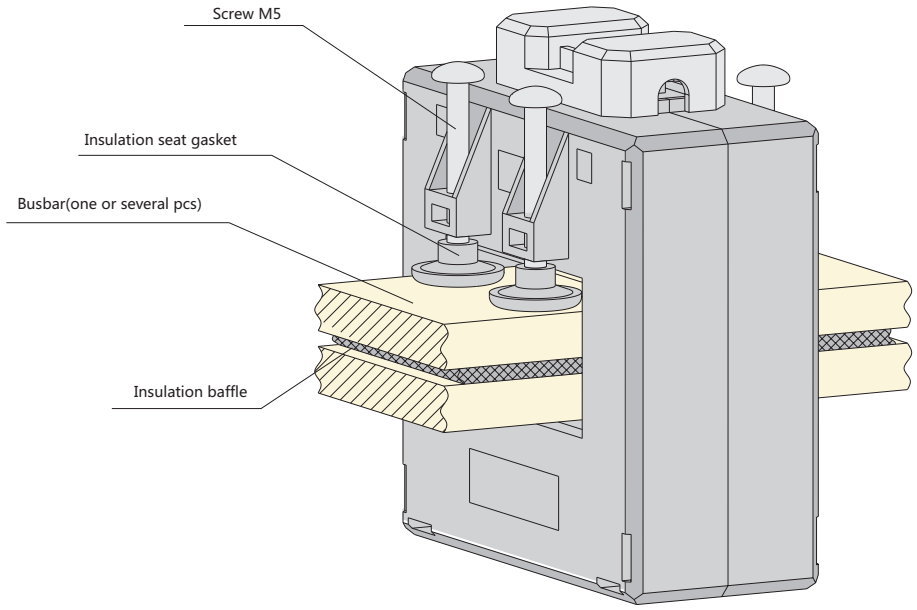

Base mounting

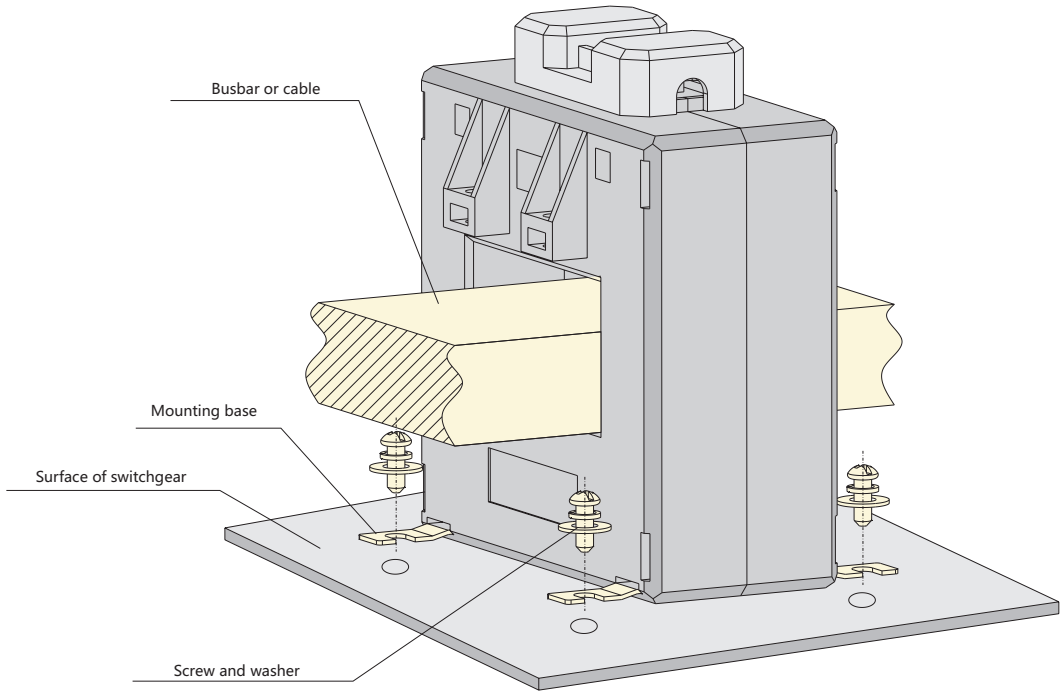

I

«Электро-Профи» - www.ep.ru



RCT Current Transformers

1. General

1.1 Application: to be used in combination with measurement instruments: ammeters, watt-hour meters, measurement units, control relays, etc.

2. Operating conditions

2.1 Secondary current Isn: 5A

2.2 Rated voltage Ue: 660 V

2.3 Frequency: 50Hz/60 Hz

2.4 Operating temperature: -5℃+40℃, humidity < 80%

2.5 Actitude:≤1000m

2.6 Standards: IEC 61869-2

2.7 Installation type: busbar or plate fixing

3. Type designation

RCT - □

- Diameter of window for bars
- Current transformer series

4. Features

4.1 The product is characterized by compact design, light weight, etc.

4.2 Made of single or several pieces of enameled wire evenly distributed around the core, secondary winding is characterized by good magnetic conductivity capability, low power consumption, small magnetic-flux-leakage and convenient compensation adjustment.

4.3 Encapsulated in fire-retardant plastic, the enclosure is characterized by good insulation capacity, high intensity, elegant appearance, light weight, convenient mounting, etc.

«Электро-Профи» - www.ep.ru

5. Technical data

Model	Current ratio (A)	Rated output(VA)		Number of turns through iron core	Overall and installing dimensions (mm)
		Accuracy class			
		0.5	1		
 RCT-25	75/5	2.5	2.5	1	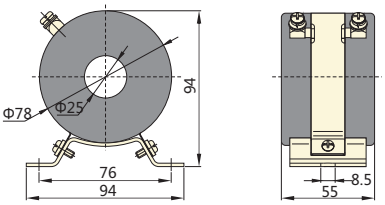
	100/5	2.5	2.5	1	
 RCT-35	75/5	2.5	2.5	1	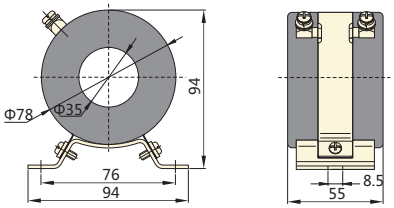
	100/5	2.5	2.5	1	
	150/5	2.5	2.5	1	
	200/5	5	5	1	
	250/5	5	5	1	
	300/5	5	5	1	
 RCT-60	400/5	5	5	1	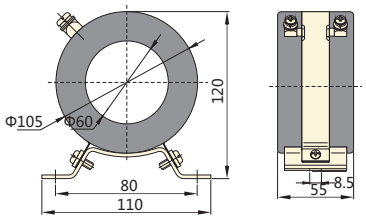
	500/5	10	10	1	
	600/5	10	10	1	
	750/5	10	10	1	
	800/5	10	10	1	
	1000/5	10	10	1	
	1200/5	10	10	1	
 RCT-90	800/5	10	10	1	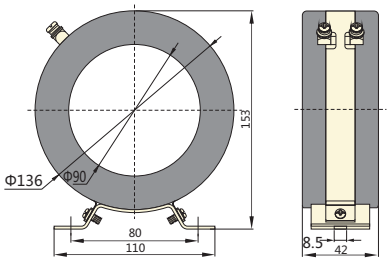
	1000/5	10	10	1	
	1200/5	10	10	1	
	1500/5	10	10	1	
	1600/5	10	10	1	
 RCT-110	1500/5	10	10	1	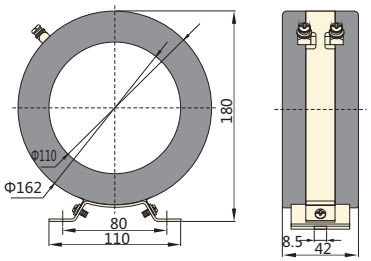
	1600/5	10	10	1	
	2000/5	20	20	1	
	2500/5	20	20	1	
	3000/5	20	20	1	

I



MES Current Transformers

1. General

1.1 Application: to be used in combination with measurement instruments: ammeters, watt-hour meters, measurement units, control relays, etc.

2. Technical data

2.1 Secondary current Isn: 5A

2.2 Rated voltage Ue: 660 V

2.3 Frequency: 50Hz/60Hz

2.4 Instrument security factor (FS): 5

2.5 Operating temperature: -5℃to +40℃, humidity <80%.

2.6 Actitude:≤1000m

2.7 Standards: IEC 61869-2

2.8 Installation type: busbar or plate fixing

3. Type designation

MES - □

Width of window for bars

Current transformer series

4. Operation conditions

4.1 Installation site: Indoors.

4.2 Ambient temperature: -5℃~40℃, temperature ≤30℃.

4.3 Ambient humidity: Relative humidity ≤80%.

4.4 Altitude: ≤1000m.

4.5 Atmospheric condition: Be free from severe contamination.

«Электро-Профи» - www.ep.ru

Model	Current rate (A)	Rated load (VA) 0.5 class	Overall and installing dimensions (mm)
 MES-30	150/5	5	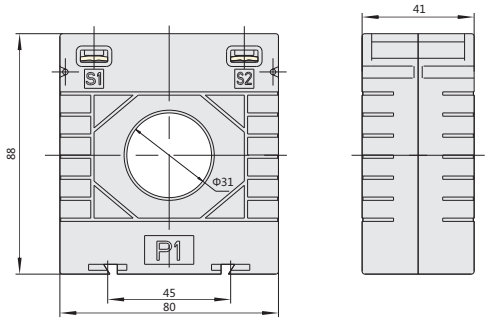
	200/5	5	
	250/5	5	
	300/5	10	
	400/5	10	
 MES-40	300/5	5	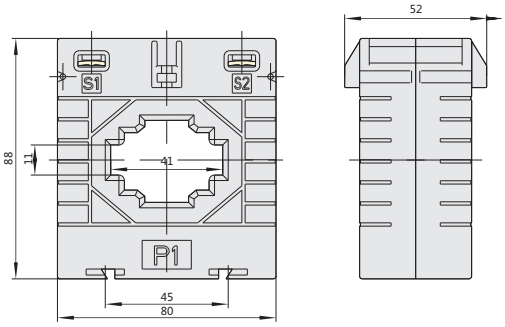
	400/5	5	
	500/5	10	
	600/5	10	
 MES-60	600/5	10	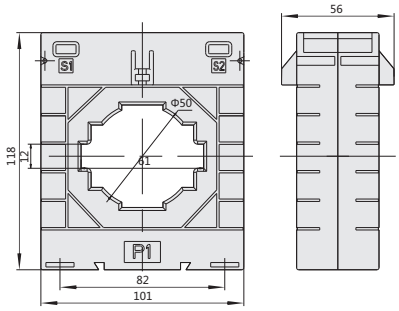
	750/5	10	
	800/5	10	
	1000/5	10	
	1200/5	10	
	1500/5	10	
 MES-100Ⅰ	500/5	10	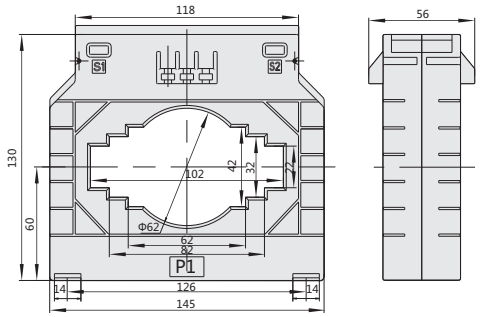
	600/5	10	
	750/5	10	
	800/5	10	
	1000/5	10	
	1200/5	10	
	1500/5	10	
	2000/5	10	
 MES-100Ⅱ	2000/5	30	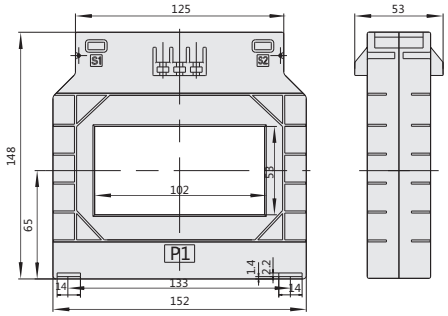
	2500/5	30	
	3000/5	30	
	4000/5	30	



PC-UPS Series Backup Uninterruptible Power Supply

1. Applicable scope

PC-UPS series uninterruptible power supply is a backup UPS developed for computer load by our company. It is consist of various modules, such as charging module, battery pack, inverter module and conversion device, etc. when the mains supply is normal, it supplies load a straight power or alternating current slightly regulated by tapped transformer. The inverter does not work, the battery is charged by an independent charger. When the mains exceeds the specified range, the load will be powered by battery inverter instead of relay The backup UPS features high operating efficiency, low noise and relatively low price. It is mainly used for applications with small mains fluctuation and low requirements for the quality of power supply, which can ensure reliable operation of personal computers and other loads. It is also suitable for computer equipment and peripherals and other loads at home or in commercial office.

2. Model and meaning

PC-UPS-□

- Nominal capacity (VA)
- Uninterruptible Power Supply
- personal computer only (backup)

3. Normal working conditions and installation conditions

3.1 Ambient temperature: 0℃~+40℃;

3.2 Relative humidity: less than 90% (temperature: +20 ℃);

3.3 Altitude of installation site should not exceed 1000m;

3.4 Installation: the installation environment should be well ventilated, no obvious; contamination, corrosive gases, dust, combustibles and combustible gases.

«Электро-Профи» - www.ep.ru

4. Main parameters and technical performance

Model	PC-UPS-400	PC-UPS-600	PC-UPS-800	PC-UPS-1000	PC-UPS-1500	PC-UPS-2000
Capacity	400VA/240W	600VA/360W	800VA/480W	1000VA/600W	1500VA/900W	2000VA/1200W
Input						
Voltage	220/230/240VAC					
Voltage range	180~270VAC	140~290VAC	162~268VAC	140~300VAC	162~268VAC	162~268VAC
Frequency	60/50Hz (automatic detection)					
Output						
Output voltage	110/120VAC or 220/230/240VAC					
Voltage range (battery mode)	±10%					
Frequency range (battery mode)	50Hz or 60±1Hz					
Conversion time	Typically 2-6ms					
Waveform (battery mode)	Analog sinewave					
Battery						
Battery model &number	12V/4.5Ah×1	12V/7Ah×1	12V/9Ah×1	12V/7Ah×2	12V/9Ah×2	12V/9Ah×2
Charging time	Charged to 90% after 4hours			Charged to 90% after 4-6hours		
Protective function	Overload, deep discharge and overcharge protection					
Indicator description						
LCD display	Load size, battery capacity, mains mode, battery mode, bypass mode, fault indication					
Ring of alarm						
Battery mode	Ring every 10 seconds					
Battery is low	Ring every 1 second					
Overload	Ring every 0.5 seconds					
Error	Ring continuously					
Physical properties						
L × W × H (mm)	300×101×142			320×130×182		
Net weight (Kg)	3.7	4.4	5.0	8.2	10.4	10.6

Note: We reserve the right to make changes to the current products. Please take the actual product as the standard.

5. Features

5.1 Full-plastic enclosure, features simple, compact and generous design;

5.2 Ultra-wide mains input range, automatically adjust mains voltage boosting and dropping, and stabilize voltage output (only for 600VA-2KVA);

5.3 Superior microprocessor ensures reliable operation;

5.4 LCD touch screen, easy to operate;

5.5 Output analog sinewave, with auto restart function after mains supply restored and shutdown charging function.

6. Precautions for use

6.1 Do not place it on the inclined or uneven plane;

6.2 Avoid direct sunlight, rain or damp;

6.3 Keep away from fire and heat. Please do not place any object on the device;

6.4 Avoid corrosive gases;

6.5 If the user's load exceeds the rated output power, the output voltage will be very low, then device cannot work;

6.6 The main loads of PC-UPS series are computer load, inductive loads (e.g. fan, drill, hair drier, etc.). The backup UPS is not suitable for photocopier, laser printer and other devices with large starting current;

6.7 Please put the device in a clean, well-ventilated place far away from heat sources and strong magnetic fields;

6.8 Do not open the housing by yourself to ensure your personal safety. If a fault occurs, please contact professional maintenance personnel;

6.9 Please keep uninterruptible power supply at a distance of more than 30cm from the monitor, so as not to interfere with the monitor.

«Электро-Профи» - www.ep.ru

7. Model selection guide

PC-UPS series is designed for computers and other equipment. When selecting models, you can mainly refers to nominal power and standby power supply time to choose the capacity of UPS. UPS can be selected according to 2-5 times of load. The larger the value, the longer the backup time, and vice versa.

Note: UPS is a precision power supply, suitable for weak inductive load such as computer. You cannot connect too many ticket printers! Strong inductive loads, such as currency pressing machine for bank system, photocopier, laser printer, electric roller shutter door cannot be connected! If needed, the matching ratio of UPS and such strong inductive load power must be 4:1 or more. Similarly, the matching ratio of conventional UPS and power of power equipment should be 5:1 or more!

Example of model selection: If the user's total computer load power is 200W, according to the smallest multiple of 2, then:
UPS capacity (VA) = 200W×2 =400 VA, you can choose PC-UPS-400.

«Электро-Профи» - www.ep.ru



HP-UPS Series Online Uninterruptible Power Supply

1. Applicable scope

HP-UPS series online uninterruptible power supply is a single-inlet and single-outlet high-frequency UPS developed by our company. This series of UPS using high-frequency switching technology, replacing the bulky industrial frequency transformer in rectifier and inverter with high-frequency switching elements. During operation, regardless of whether the grid voltage is normal or not, the output AC voltage is always output by the inverter online, features small size, high efficiency and saving operating costs. Each capacity model has both standard and long-term version and is widely applied, ideal for small space, such as office and computer room. It can be applied in applications such as government office, education organization, bank branch, and branch of large enterprise, small and medium enterprises. It can provide reliable power supply for critical equipment, such as miniaturized data center, memory, network device, network phone, communication device, automation device, Office terminal as well as precision instrument.

2. Model and meaning

HP-UPS-□kVA□□

- None-standard (internal battery pack); L-long-term (need to equip battery pack)
- None-tower-type (vertical); R-rack (horizontal)
- Nominal capacity (kVA)
- Uninterruptible Power Supply
- High-frequency online

3. Normal working conditions and installation conditions

3.1 Ambient temperature: 0℃~+40℃;

3.2 Altitude of installation site should not exceed 1000m;

3.3 Installation: the installation environment should be well ventilated, no obvious contamination, corrosive gases, dust, combustibles and combustible gases.

«Электро-Профи» - www.ep.ru

4. Main parameters and technical performance

Model		HP-UPS-1kVA(L) HP-UPS-1kVAR	HP-UPS-2kVA(L) HP-UPS-2kVAR	HP-UPS-3kVA(L) HP-UPS-3kVAR	HP-UPS-6kVA(L) HP-UPS-6kVAR		HP-UPS-10kVA(L) HP-UPS-10kVAR	
Phase		Single-phase						
Capacity		1000VA/800W	2000VA/1600W	3000VA/2400W	6000 VA/4800W		10000VA/8000W	
Input								
Input voltage		110/110/115/120/127VAC or 200/208/220/230/240VAC			208/220/230/240VAC			
Voltage range		55-150VAC or 110-300VAC at 50% load 85-140VAC or 160-280VAC at 100% load			110-300VAC at 50%load 176-300VAC at 100%load			
Frequency range		40-70Hz			46-54Hz or 56-64Hz			
Power factor		≧0.99@100% load						
Output								
Output voltage		110/110/115/120/127VAC or 200/208/220/230/240VAC			208/220/230/240VAC			
Voltage range (battery mode)		±1%						
Frequency range(Sync calibration range)		47-53Hz or 57-63Hz			46-54Hz or 56-64Hz			
Frequency range (battery mode)		50±0.25Hz or 60±0.3Hz			50Hz or 60±0.1Hz			
Peak factor		3:1						
Harmonic distortion		≦3%THD (linear load) ≦6%THD (non-linear load)			≦3%THD (linear load) ≦5%THD (non-linear load)			
Conversion time	AC to DC	0 ms						
	Inverted to bypass	4 ms (under standard conditions)			None			
Waveform(battery mode)		Pure sine wave						
Efficiency								
Mains mode		88%	88%	90%	92%		93%	
Battery mode		83%	85%	88%	90%		91%	
Battery								
Standard	Battery model	12V/9Ah						
	Number	2	4	6	16	20	16	20
	Standard charging time	Charged to 90% after 4 hours			Charged to 90% after 9 hours			
	Maximum charging current	1A			1A/2A			
	Charging voltage (VDC)	27.4±1%	54.7±1%	82.1±1%	218.4±1%	273±1%	218.4±1%	273±1%
Long-term	Battery model	Depends on customer (equip based on emergency time)						
	Number	2	3	4	6	8	6	8
	Maximum charging current	1A/2A/4A/6A (adjustable)			1A/2A/4A/6A(adjustable, 6A only for 16 batteries)			
	Charging voltage (VDC)	27.4±1%	41.0±1%	54.7±1%	82.1±1%	109.4±1%	82.1±1%	109.4±1%
		218.4±1% (basedon 16 batteries)						
Indicator description								
LCD display		Load size, battery capacity, mains mode, battery mode, bypass mode, fault indication						
Ring of alarm								
Battery mode		Ring every 10 seconds						
Battery is low		Ring every 1 second						
Overload		Ring every 0.5 seconds						
Error		Ring continuously						
Environmental conditions								
Humidity		20-90%RH @ 0-40℃ (no condensation)		0-95%RH @ 0-50℃			0-95%RH @ 0-40℃	
Noise		Less than 50dBA @ 1 meter		Less than 55dBA @ 1 meter			Less than 58dBA @ 1 meter	
Control management								
Smart RS232/ optional USB		Support Windows 2000/2003/XP/Vista/2008, Windows 7/8, Linux, Unix and MAC						
Optional SNMP		Power supply management supports SNMP management and network management						

«Электро-Профи» - www.ep.ru

Physical properties								
Model (tower-type)		**HP-UPS-1kVA(L)**	**HP-UPS-2kVA(L)**	**HP-UPS-3kVA(L)**	**HP-UPS-6kVA(L)**		**HP-UPS-10kVA(L)**	
Standard	L × W × H (mm)	282×145×220	397×145×220	421×190×220	369×190×688	442×190×668		
	Net weight (Kg)	9.8	17	27.6	61	74	66	76
Long-term	L × W × H (mm)	282×145×220	397×145×220		369×190×318		442×190×318	
	Net weight (Kg)	4.1						
Model (rack)		**HP-UPS-1kVAR**	**HP-UPS-2kVAR**	**HP-UPS-3kVAR**	**HP-UPS-6kVAR**		**HP-UPS-10kVAR**	
Standard	L × W × H (mm)	310×438×88[2U]	410×438×88[2U]	630×438×88[2U]	Host: 500x438x88[2U] Battery kit: 668x438x88 [2U]	Host: 500x438x88[2U] Battery kit: 580x438x133[2U]	Host: 580x438x133[3U] Battery kit: 580x438x133[2U]	
	Net weight (Kg)	12	19	29.3	Host: 15 Battery kit:48	Host: 15 Battery kit:61	Host: 18 Battery kit:51	Host: 18 Battery kit:61
Long-term	L × W × H (mm)	310×438×88[2U]	410×438×88[2U]		500×438×88[2U]		580×438×133	
	Net weight (Kg)	9	12	14.2	15		18	

Note:

1. When 1-3 kVA UPS is set to constant voltage and constant frequency mode, the output power will decrease by 80%. When the output voltage of UPS is set to 100/200/208 VAC, the output power will decrease by 80%;
2. When 6/10 kVA UPS is set to constant voltage and constant frequency mode, the output power will decrease by 60%. When the output voltage of UPS is set to 208VAC, the output power will decrease by 90%;
3. 200/208/220/230/240 VAC is only for long-term device (200VAC only for 1-3kVA); We reserve the right to make changes to the current products. Please take the actual product as the standard.

5. Features

5.1 Truly realize online double-conversion, the conversion time from mains mode to battery mode is 0 ms. Microprocessor control ensures high reliability;

5.2 Input power factor correction, the output power factor is up to 0.8;

5.3 Wide voltage input range 110-300V, for use in harsh power grid environment;

5.4 Frequency support 50/60 Hz adaptive, efficient frequency conversion mode;

5.5 Compatible generator input (generator capacity must be 2 times of UPS capacity);

5.5 The matched delicate SNMP card can implement perfect monitoring separately or together with USB or Rs232;

5.6 Simple operation and control through LCD display, and integrate display of state of UPS monitoring;

5.7 Support automatic power-on function (this feature is turned off by default, only for 1-3k);

5.8 Battery mode, shut down when the power runs out; automatically boot after the power is back on;

5.9 With ECO energy-saving mode (only for 1-3k), 6-10k standard EPO (emergency power-off device);

5.10 Features small size, easy operation, high power density, strong stability, cost-effective, wide application.

6. Precautions for use

6.1 Do not place it on the inclined or uneven plane; avoid direct sunlight, rain or damp; avoid corrosive gases; keep away from fire and heat; please do not place any object on the device; please put the device in a clean, well-ventilated place far away from heat sources and strong magnetic fields.

6.2 If the user's load exceeds the rated output power, the output voltage will be very low, then device cannot work.

6.3 Do not open the housing by yourself to ensure your personal safety. If a fault occurs, please contact professional maintenance personnel.

«Электро-Профи» - www.ep.ru

7. Model selection guide

HP-UPS series is designed for computers and other equipment. When selecting models, you can reasonably choose the capacity of UPS according to nominal power and standby power supply time. It's generally recommended to select the UPS based on 2-5 times of total load power.

Note: HP-UPS series applies half-bridge inverter architecture, it cannot adapt to half-wave load. More than 7% of the pure half-wave load will cause the UPS's BUS voltage imbalance or the BUS voltage too high. Therefore, for half-wave loads, such as laser printer, hairdryer, heat gun, servo motor, balanced loads (e.g. pure resistive load such as light bulbs, resistors in , or RCD load such as computers) need to be added to the UPS output. For equipment such as motor or compressor, it is easy to lead to machine overload due to a large starting current. So the capacity of UPS must be 3-5 times of the load capacity.

«Электро-Профи» - www.ep.ru



GP-UPS Series Online Uninterruptible Power Supply

1. Applicable scope

GP-UPS series of online uninterruptible power supply is a three-inlet and three-outlet or three-inlet and single-outlet industrial frequency UPS developed by our company. This series of UPS is an on-line double conversion uninterruptible power supply system with pure sine wave output, it is a kind of power device for supplying power for important loads without grid interference, with stabilized voltage and stabilizedfrequency. When the mains power supply fails, the batteryenergy is inverted and output to the load via UPS to achieve uninterrupted output. This series of UPS applies high frequency double conversion structure of output isolation transformer and advanced digital control, to provide stable, clean and uninterrupted output. At the same time, it also provides a variety of communication solutions and user-friendly HMI, facilitating machine settings and monitoring. Modbus, RS232 interface and expandable smart slot are provided on communication section. This series of UPS system is mainly composed of rectifier module and inverter module, AC-to-DC-to-AC converter circuit, static bypass, maintenance bypass, charge and discharge circuit of circuit. Compared with GP-UPS series built-in isolation transformer, the HP-UPS series has obvious advantages ofstrong anti-high-frequency interference, high anti-overload ability, capability of effectively reducing zero voltage and high reliability. This series of UPS can provide reliable power supply for applications, such as medium and large networks, data centers, and concentrated power supply of building, industrial factories and mines.

«Электро-Профи» - www.ep.ru

2. Model and meaning

GP-UPS-□ kVA

- Nominal capacity (kVA)
- Uninterruptible Power Supply
- Industrial frequency online

3. Normal working conditions and installation conditions

3.1 Ambient temperature: 0℃~+55℃,
storage temperature: -15℃ ~ 60℃;

3.2 Relative humidity: 5% ~ 95%;

3.3 Altitude of installation site should not exceed 1000 m;
please derate to use if exceed this height;

Attitude (meter)	1000	1500	2000	2500	3000	3500	4000	4500	5000
Derating factor	100%	95%	91%	86%	82%	78%	74%	70%	67%

3.4 No vibration and shock at the installation site and vertical tilt angle should be no more than 5°; the distance between front and back of device and the wall or other objects should be at least 80 cm; the distance between the both sides of device and the wall or other objects should be at least 50 cm;

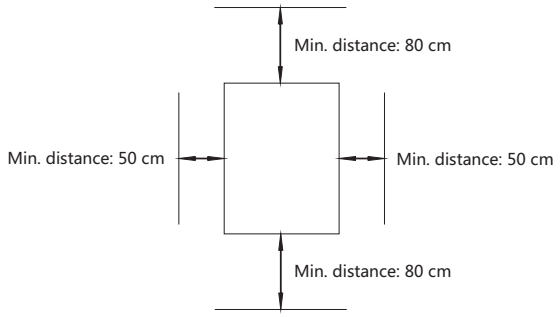

3.5 The UPS system should be installed in well-ventilated, cool and dust-free operating environment with low humidity and clean air. Recommended ambient temperature is 20℃~25℃, the humidity is controlled at about 50%;

3.6 Note: Flammable, explosive or corrosive gases or liquids should not be stored near the installation site; install in the working environment with conductive dust is forbidden.

«Электро-Профи» - www.ep.ru

4. Tower-type (ordinary industrial frequency UPS)/10~200kVA/three-inlet and three-outlet



GP-UPS-200kVA GP-UPS-120kVA GP-UPS-80kVA GP-UPS-100kVA GP-UPS-40kVA GP-UPS-60kVA GP-UPS-30kVA GP-UPS-10kVA GP-UPS-15kVA GP-UPS-20kVA

4.1 Features

Digital control online double conversion technology;

This series provides with built-in output isolation transformer as standard, with low output power clutter. Industrial-strength design is suitable for a wide range of harsh conditions, areas and environments, and has excellent performance especially in the harsh environment;

Front maintenance design, providing with maintenance bypass switch as standard, designed for various different loads and with multiple communication interfaces;

Compatible with generator input (the capacity of generator must be 2 times of UPS capacity);

Support wrong phase input and rectifier without N wire;

Number of battery and charging current can be set on-site as required;

Battery mode, shut down when the power runs out;

Automatically boot after the power is back on;

Provide parallel function as standard, up to 4 device can operate in parallel, without any extra parallel card.

4.2 Main parameters and technical performance

Model	**GP-UPS -10kVA**	**GP-UPS -15kVA**	**GP-UPS -20kVA**	**GP-UPS -30kVA**	**GP-UPS -40kVA**	**GP-UPS -60kVA**	**GP-UPS -80kVA**	**GP-UPS -100kVA**	**GP-UPS -120kVA**	**GP-UPS -160kVA**	**GP-UPS -200kVA**
Capacity	10kVA	15kVA/ 12kW	20kVA/ 16kW	30kVA/ 24kW	40kVA/ 32kW	60 kVA/ 48 kW	80kVA/ 64kW	100kVA/ 80kW	120kVA/ 96kW	160kVA/ 128kW	200kVA/ 160kW
Input											
Nominal voltage	3x380VAC/400VAC (3Ph+N)										
Voltage range	165V~280V(Ph-N);285V~485V(Ph-Ph)										
Frequency range	50/60Hz ±10%										
Inverter											
Output voltage	3X380VAC/400VAC/415VAC(3Ph+N)										
Voltage stability	Stable: typ. ±1%										
	Transient: typ. ±5% (load change 100%-0%-100%)										
Range of frequency synchronization	50/60Hz synch. ± 1%; Mains lost ± 0.1Hz										
Frequency tracking rate	±1Hz/s										
Output waveform	Sine wave										
Total harmonic (THDv)	<2% (linear load); <5%(non-linear load)										
Phase imbalance	120°±1% (balanced load) ; 120°±2% (50% unbalanced load)										
Dynamic adjusting time	Restore to 90% of rated value in less than 60 ms										
Overload capacity	110%~150% can run for 10 minutes to 1 minute; 150% ~>160% can run for 1 minute to 200 ms; >160% can run for 200 ms										
Peak factor	3:1										
Factor range of load	0.6~1 (capacitive or inductive)										
Unbalanced output voltage @ 100% Unbalanced load	<1%										
Current limit	Extremely heavy overload, short circuit: limit of effective value of voltage; surge current: peak voltage limit										

«Электро-Профи» - www.ep.ru

Table (continued)

Model	GP-UPS -10kVA	GP-UPS -15kVA	GP-UPS -20kVA	GP-UPS -30kVA	GP-UPS -40kVA	GP-UPS -60kVA	GP-UPS -80kVA	GP-UPS -100kVA	GP-UPS -120kVA	GP-UPS -160kVA	GP-UPS -200kVA
Capacity	10kVA/ 8kW	15kVA/ 12kW	20kVA/ 16kW	30kVA/ 24kW	40kVA/ 32kW	60kVA/ 48kW	80kVA/ 64kW	100kVA/ 80kW	120kVA/ 96kW	160kVA/ 128kW	200kVA/ 160kW
Bypass											
Type	Static switch										
Voltage	3x380VAC/400VAC (three-phase + N wire)										
Frequency	50/60Hz										
Control method	Microprocessor control										
Inverted to bypass switching time	Synchronous mode: 0 ms, asynchronous mode: 10 ms										
Overload capacity	150%~180% can continue for 1 hour ~30 seconds; 180%~200% can continue for 30 seconds ~ 200 ms; 200% can continue for 200 ms										
Switch to bypass	Overload 160%: switch immediately										
Switch back to inverter	Automatically switch after alarm cleared										
Maintenance bypass											
Type	Uninterrupted										
Voltage	3 x 400V (three-phase + N wire)										
Frequency	50/60Hz										
Overall effect – Online mode	89%		90%		91%		92%				
Overall effect – Battery mode	90%		91%		92%		93%				
Battery & charge											
Number of battery (12 V)	29/30/31/32 (adjustable)										
Charging method	Optional: constant voltage charging / constant current charging										
Charging current	Default 10A, Max. = capacity/battery voltage (real-time value) The maximum current limit does not exceed 40A			Preset 10A, max. 40A; 5A @ full load							
Battery type	Sealed lead-acid battery, nickel-cadmium battery										
Physical											
Size D × W × H (mm)	656×405×817			656×405 ×941	821×432×1159		975×554×1286		975×554 ×1326	1051×705×1646	
Net weight (kg)	118	120	145	193	278	365	471	573	650	760	790

5. Cabinet-type (industrial design)

5.1 Features

Equipped with high-performance DSP chip (302-bit 150 MHz, independent multiplier) full digital THDV control;
Increased board integration (motherboard, display, rectifier drive, inverter drive, power × 2, make contact, sampling) ;
Use front flipping structure, no wire bending;
Smart fan speed control, the operating noise of the whole device is less than 60 db (in accordance with YD/T1095-2008II Class) under redundancy or half load conditions;
Optimized air duct guarantees high heat emission efficiency;
Equipped with 6 temperature detection sensors, with early-warning function;
Parallel digital ring control, without balanced reactor, multiple devices can be paralleled;
Signal wire/electronic wire laid independently, the circuit board has protection function, with increased operational reliability;
Optimized ventilation path, with protection class IP20, optional IP42;
Equipped with cold start function;
Provide protection against installation errors (wrong connection of input and output, reverse connection of battery);
The UPS power supply instantly put into 100% non-linear load, without switch to bypass;
Battery switch detection;
ECO mode;
DSP online upgrade;
Meet the safety requirements 5.27 in YD/T1095-2008 standard (insulation resistance, insulation strength 2000VAC);
Full front mount and maintenance, connect with other cabinets is possible;
Selectable housing color and height;
The modular design of wearing and consumable parts enables quick exchange.

«Электро-Профи» - www.ep.ru

5.2 Industrial design 10kVA~200kVA/three-inlet three-outlet/DC 384V



Model	GP-UPS-10kVA DC384 3:3	GP-UPS-15kVA DC384 3:3	GP-UPS-20kVA DC384 3:3	GP-UPS-30kVA DC384 3:3	GP-UPS-40kVA DC384 3:3	GP-UPS-60kVA DC384 3:3	GP-UPS-80kVA DC384 3:3	GP-UPS-100kVA DC384 3:3	GP-UPS-120kVA DC384 3:3	GP-UPS-160kVA DC384 3:3	GP-UPS-200kVA DC384 3:3
Capacity	10kVA/ 8kW	15kVA/ 12kW	20kVA/ 16kW	30kVA/ 24kW	40kVA/ 32kW	60kVA/ 48kW	80kVA/ 64kW	100kVA/ 80kW	120kVA/ 96kW	160kVA/ 128kW	200kVA/ 160kW
Input											
Nominal voltage	3x380VAC/400VAC/415VAC										
Voltage range	304VAC~456VAC										
Frequency range	50Hz ± 5Hz (±10%)										
Output											
Nominal voltage	3x380VAC/400VAC/415VAC (three-phase + N wire)										
Wiring method	Tree-phase five-wire (three-phase + N wire + ground wire)										
Output waveform	Pure sine wave										
Output voltage regulated accuracy — Stable	±1%										
Output voltage regulated accuracy — Dynamic	±5%										
Output frequency	50Hz										
Output frequency accuracy	±1%										
Frequency tracking range	± 5Hz (work area of equivalent bypass)										
Frequency tracking rate	1~2Hz/second										
Output power	0.8										
Peak factor of output current	3:1										
Output waveform distortion (THDv)	<2% (linear load)										
	<4% (non-linear load)										
Dynamic voltage transient range	0%->100%->0% (R load) <±5% ;20%->100%->20% (R load) ±3%										
Voltage transient recovery time The third level	0%~100% RCD load: recover to 90% of normal voltage in less than 60 ms										
Output voltage phase deviation	120°±1% (balanced load)										
	120°±2% (50% unbalanced load)										
Conversion time	0 ms										
Overload capacity	0%~110% can continually operate; 110%~150% can continue for 10~1 minute; >160% can continue for 200 ms										
Short-circuit capability	60~100ms										
Transient response time	<5ms										
Bypass											
Wiring method	Tree-phase five-wire (three-phase + N wire + ground wire)										
Output voltage range	3x380VAC/400VAC/415VAC (three-phase + N wire)										
Overload capacity	1.5 In ~ 1.8 in 1 hour to 30 seconds										
Short-circuit capability	1.8 In~>2.0 in 30 seconds~200 ms										
System											
Efficiency (linear load)	90%		91%				92%				
Energy-saving mode (non-parallel model)	Yes										
Emergency switch	Yes										
Safety standard	IEC 61000-4-5 surge protection										

I

«Электро-Профи» - www.ep.ru

Table (continued)

Model		GP-UPS-10kVA DC384 3:3	GP-UPS-15kVA DC384 3:3	GP-UPS-20kVA DC384 3:3	GP-UPS-30kVA DC384 3:3	GP-UPS-40kVA DC384 3:3	GP-UPS-60kVA DC384 3:3	GP-UPS-80kVA DC384 3:3	GP-UPS-100kVA DC384 3:3	GP-UPS-120kVA DC384 3:3	GP-UPS-160kVA DC384 3:3	GP-UPS-200kVA DC384 3:3
Capacity		10kVA/ 8kW	15kVA/ 12kW	20kVA/ 16kW	30kVA/ 24kW	40kVA/ 32kW	60kVA/ 48kW	80kVA/ 64kW	100kVA/ 80kW	120kVA/ 96kW	160kVA/ 128kW	200kVA/ 160kW
Battery/rectifier												
Rectifier	Nominal voltage	6-pulse							6-Pulse or 12-pulse			
	Rectifier voltage	384VDC										
	Charging voltage	395VDC~435VDC (adjustable)										
	Charging current (max.)	10A, max.= capacity (kW)/battery voltage (real-timevalue)			Preset 10A, max. 40A							
Battery	Battery model	Lead-acid battery										
	Number	29~32 pieces(adjustable)										
	DC non-return diode	None										
	Cold start	Yes										
Physical properties												
IP protection class		IP20 (preset), IP21/IP31 (optional)										
Cabinet size (D × W × H) mm		800×800×1800							800×1200×1800		800×1600×1800	
Net weight of cabinet (kg)		290	312	349	385	427	508	563	760	850	1120	1390
Environmental conditions												
Operating temperature		0~35°C continuous running, full load running for 8 hours at 40 °C (nominal input voltage, battery charge, no overload), decrease to 85% of linear load at 45 ° C										
Relative humidity		0~90%, no condensation										
Noise		less than 70dB @ 1 meter										
Control management												
Modbus RS-232/RS485		Support Windows 2000/2003/XP/Vista/2008, Windows 7/8/10, Linux and MAC										
Make contact interface		6 outputs, 2 inputs										
Optional SNMP		Power supply management supports SNMP management and network management										

Note: We reserve the right to make technical changes.

5.3 Industrial design 10kVA~120kVA/three-inlet single-outlet/DC 384V



«Электро-Профи» - www.ep.ru

Model		GP-UPS-10kVA DC384 3:1	GP-UPS-10kVA DC384 3:1	GP-UPS-20kVA DC384 3:1	GP-UPS-30kVA DC384 3:1	GP-UPS-40kVA DC384 3:1	GP-UPS-60kVA DC384 3:1	GP-UPS-80kVA DC384 3:1	GP-UPS-100kVA DC384 3:1	GP-UPS-120kVA DC384 3:1
Capacity		10kVA/8kW	15kVA/12kW	20kVA/16kW	30kVA/24kW	40kVA/32kW	60kVA/48kW	80KVA/64kW	100kVA/80kW	120kVA/96kW
Input										
Nominal voltage		3x380VAC (three-phase + ground wire or three-phase + N wire + ground wire)								
Voltage range		304VAC~456VAC								
Frequency range		50Hz ± 5Hz (±10%)								
Output										
Nominal voltage		220VAC/230VAC/240VAC								
Wiring method		Single-phase three-wire (single phase + N wire + ground wire)								
Output waveform		Pure sine wave								
Output voltage regulated accuracy	Stable	±1%								
	Dynamic	±5%								
Output frequency		50Hz								
Output frequency accuracy		±1%								
Frequency tracking range		±5Hz (work area of equivalent bypass)								
Frequency tracking rate		1~2Hz/second								
Output power		0.8								
Peak factor of output current		3:1								
Output waveform distortion (THDv)		<2% (linear load) <4% (non -linear load)								
Dynamic voltage transient range		0%->100%->0% (R load) <±5%: 20%->100%->20% (R load) ±3%								
The third level of voltage transient recovery time		0%~100% RCD load: restore to 90% of nominal voltage in less than 60 ms								
Output voltage phase deviation		120° ±1% (balanced load)								
		120° ±2% (Half load unbalanced load)								
Conversion time		0ms								
Overload capacity		0%~110% can continually operate; 110%~150% can continue for 10~1 minute; >160% can continue for 200 ms								
Short-circuit capacity		60~100ms								
Transient response time		<5ms								
Bypass										
Wiring method		Single-phase three-wire (single-phase + Nwire + ground wire)								
Input voltage range		220VAC±25%								
Overload capacity		1.5 In ~ 1.8 in 1 hour to 30 seconds								
Short-circuit capacity		1.8 In~>2.0 in 30 seconds~200 ms								
System										
Efficiency (linear load)		≧90%								
Energy-saving mode (non-parallel model)		Yes								
Emergency switch		Yes								
Safety standard		IEC 61000-4-5 surge protection, IEC 62040-2 EMC/EMI, IEC62040-1 Safety specification								
Battery/rectifier										
Rectifier	Type	6-pulse								
	Rectifier voltage	384VDC								
	Charging voltage	395VDC~435VDC (adjustable)								
	Maximum charging current	Preset 10 A, Max. = capacity (kW)/battery voltage (real-time value)			Preset 10 A, Max. 40 A					
Battery	Battery model	Lead-acid battery								
	Number	29~32 pieces(adjustable)								
	DC non-return diode	None								
	Cold start	Yes								

«Электро-Профи» - www.ep.ru

Switch Disconne

Flexible operation, reliable and stable



«Электро-Профи» - www.ep.ru

ctor

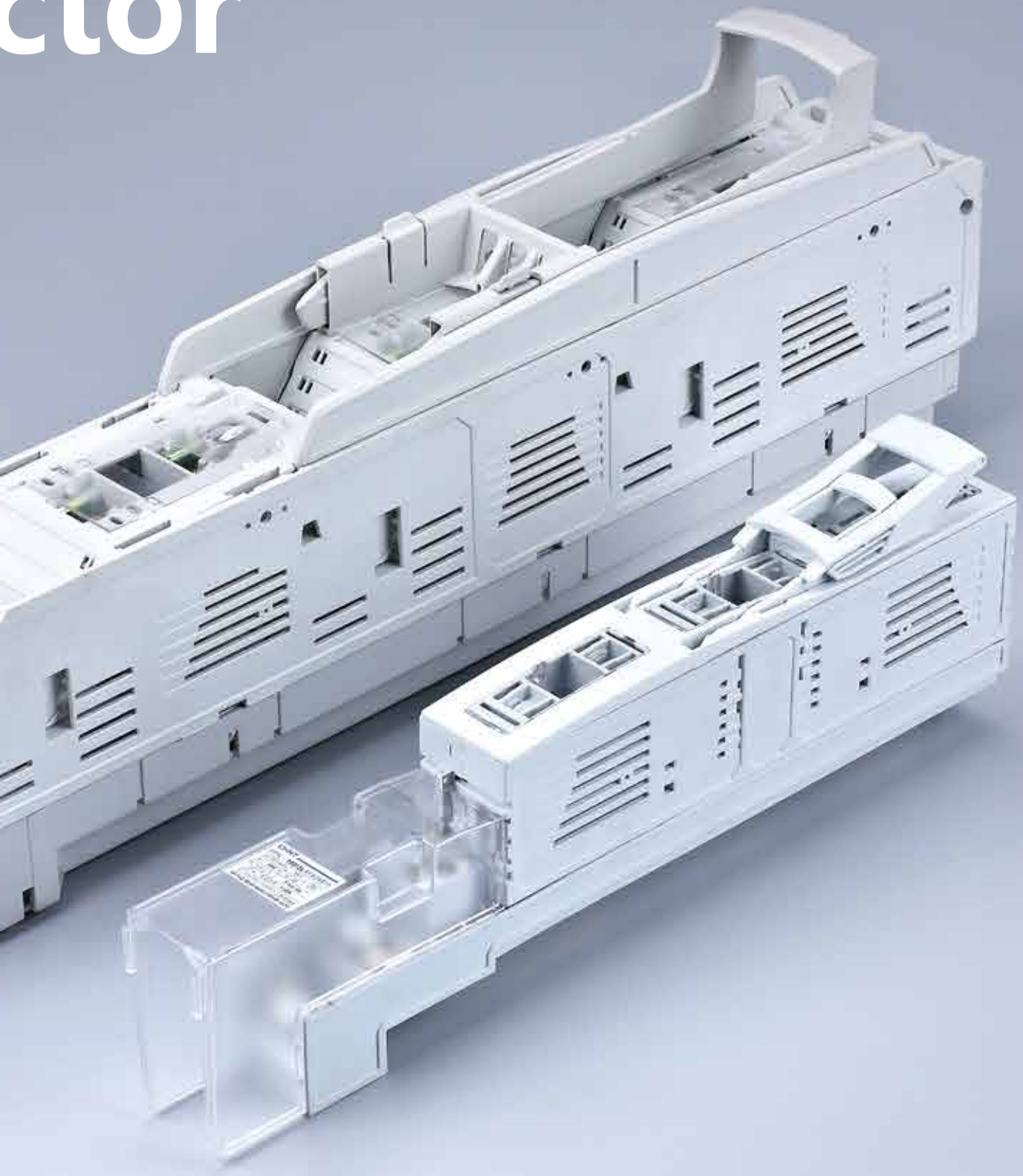

«Электро-Профи» - www.ep.ru

CHINT ELECTRIC

Switch Disconnector, Fuse-switch Disconnector, Changeover Switch

Switch Disconnector



HH15-QA
Switch Disconnector

Page P-003



HH15-QP
Switch Disconnector

Page P-006



NH40
Switch Disconnector

Page P-009

Fuse-switch Disconnector



HH15/QSA
Fuse-switch Disconnector

Page P-014



NHR17
Fuse-switch Disconnector

Page P-017



NHR40
Fuse-switch Disconnector

Page P-019



NHRT40
Vertical Fuse-switch Disconnector

Page P-023

Changeover Switch



NZ7
Automatic Transfer Switching Equipment

Page P-029



HH15/QAS/ QPS/QSS
Changeover Switch

Page P-040



NH40S
Changeover Switch

Page P-043



NH40SZ
Automatic Changeover Switch

Page P-047

«Электро-Профи» - www.ep.ru

Switch Disconnector

Thermal current	16	32	40	63	80	100	125	160	200	250
HH15/QA							HH15-125/ QA	HH15-160/ QA	HH15-200/QA	
HH15/QP										HH15-250/QP
NH40	NH40-16	NH40-32	NH40-40	NH40-63	NH40-80	NH40-100	NH40-125	NH40-160	NH40-200	NH40-250

HH15-/QA



HH15-/QP



NH40







«Электро-Профи» - www.ep.ru

315	400	630	1000	1250	1600	2000	2500	3150
	HH15-400/QA	HH15-630/QA	HH15-1000/QA	HH15-1250/QA	HH15-1600/QA			
		HH15-630/QP	HH15-1000/QP	HH15-1250/QP	HH15-1600/QP		HH15-2500/QP	HH15-3150/QP
NH40-315	NH40-400	NH40-630	NH40-1000	NH40-1250	NH40-1600	NH40-2000	NH40-2500	NH40-3150












«Электро-Профи» - www.ep.ru



HH15-QA Switch Disconnector

1. General

1.1 Application

Mainly used in the distributing and motor circuit which has high short-circuit current, and acted as main switch or master switch infrequently operated by hand, it is particularly suitable in the relative high class with drawable low voltage complete equipment. They provide safety isolation and protection against overcurrent for any low voltage electrical circuit.

1.2 Standard: IEC/EN 60947-3.

1.3 General characteristic

Full-enclosed structure

Unique rolling insert type contact system.

2. Type designation

2.1 Ordering information

HH15 - □/□ □ QA

- No fuse, with connection contacts in series
- No. of auxiliary contacts
  - 0: no auxiliary contact
  - 1: 1 pair of auxiliary contact
  - 2: 2 pairs of auxiliary contact
- No. of poles
  - 2: 2 poles
  - 3: 3 poles
  - 4: 4 poles
- Rated operating current
- Series No.

Note: This switch may only be operated outside the cabinet.

2.2 Technical data

Specification		125	160	200	400	630	1000	1250	1600
No. of poles		3, 4, 3+N						3, 4	
Rated insulating voltage(V)		Ue=400V, Ui=690V. Ue=690V, Ui=1000V						800	
Rated operating voltage Ue(V)		AC400						AC415	
		AC690						AC690	
Conventional thermal current(A)		125	160	200	400	630	1000	1250	1600
Rated operating current(A)	400V:AC-22B;415V:AC22B	125	160	200	400	630	1000	1250	1600
	690V: AC-21B	125	160	200	400	630	1000	1250	1600
	690V: AC-22B	125	160	160	315	425	630	800	1000
Rated Short-circuit making capacity (Peak)(kA)		20	20	20	50	50	50	65	85
Rated Short-time withstand cuuent(kA)		8	8	8	12.8	22.5	32	50	50
Mechanical life		15000	15000	15000	12000	12000	3000	1000	1000
Electric Life		1000	1000	1000	300	300	150	100	100
Operating torque (N·m)		7.5	7.5	7.5	16	16	30	30	30
Conventional thermal current of auxiliary contact Ith 400, AC-15(A)		5	5					-	

«Электро-Профи» - www.ep.ru

2.3 Dimension (mm)

HH15-125/QA, 160/QA, 200/QA

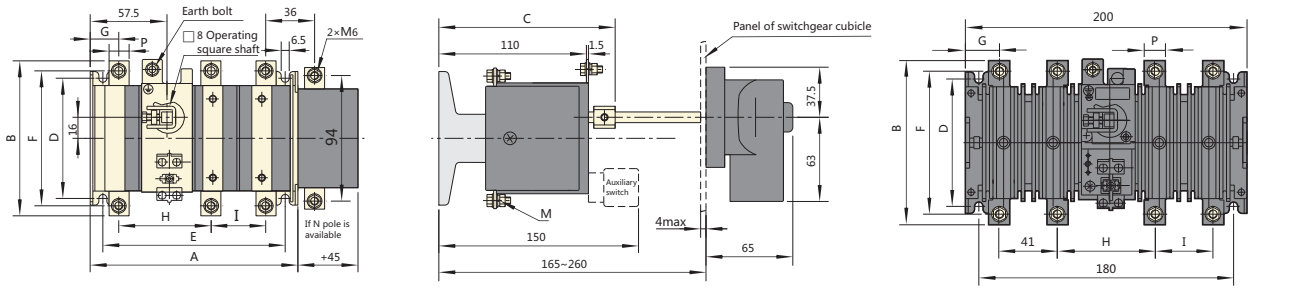

HH15-400/QA, 630/QA

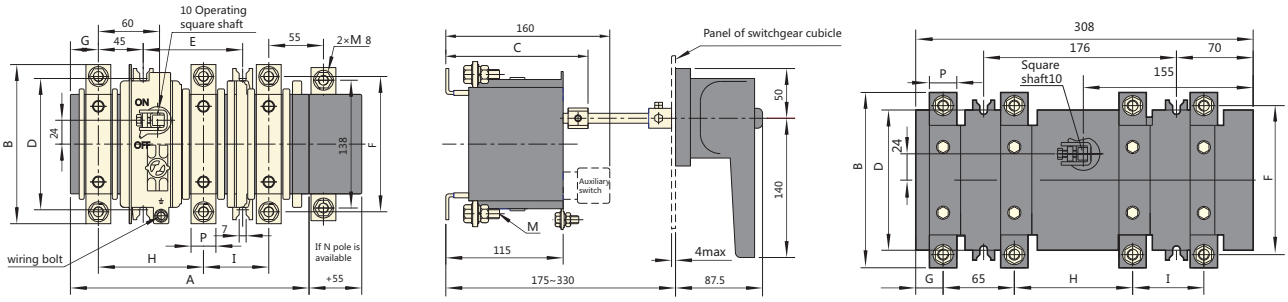

HH15-1000/QA

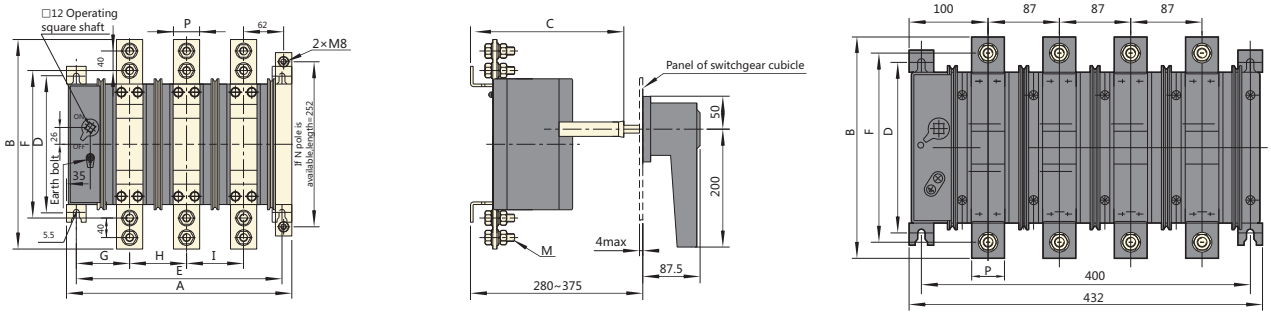

HH15-1250 , 1600/QA

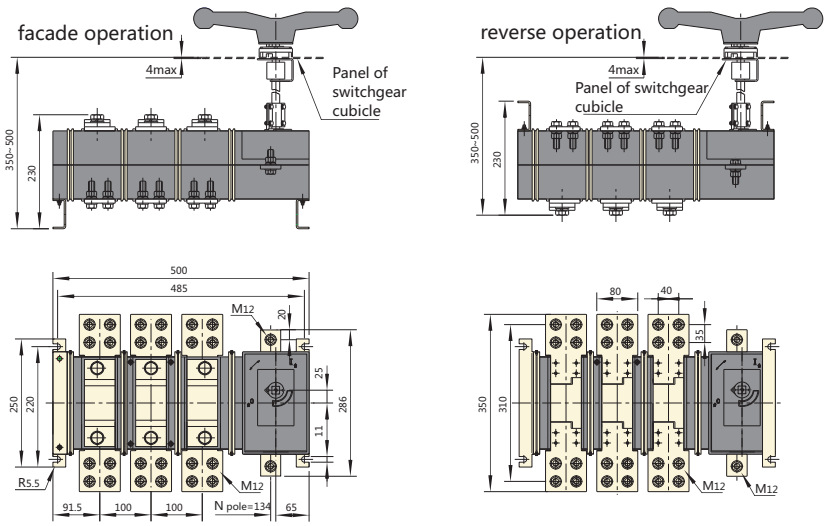

J

Specification	A	B	C	D	E	F	G	H	I	M	P
HH15-125/QA	155	116	133	90	135	101	21.5	69	41	6	15
HH15-160/QA	155	127	133	90	135	107	22.5	65	45	10	25
HH15-200/QA	155	127	133	90	135	107	22.5	65	45	10	25
HH15-400/QA	240	160	142	130	100	135	27	106	65	10	25
HH15-630/QA	240	200	142	130	100	135	27	106	65	12	40
HH15-1000/QA	345	350	188	208	315	230	82	87	87	12	50

2.4 Boring dimension (mm)

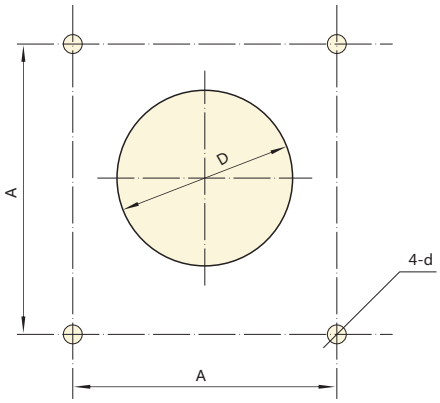

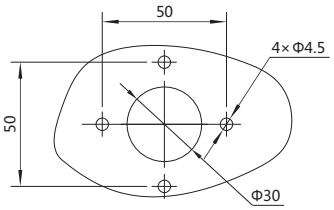

HH15-1250, 1600/QA
Openingsizeofthehandlemountingpanel

Specification	A	D	d
HH15-125~200/QA HH15-250/QP	65±0.2	$\Phi 42^{+4}_{0}$	$\Phi 4.5^{+0.5}_{0}$
HH15-400~1000/QA	88±0.2	$\Phi 63^{+2}_{0}$	$\Phi 5.5^{+0.5}_{0}$

«Электро-Профи» - www.ep.ru



HH15-QP Switch Disconnector

3. Type designation

3.1 Ordering information

HH15 - □/□ □ QP

- QP: No fuse, with connection contacts in parallel
- □: No. of auxiliary contacts
  0: no auxiliary contact
  1: 1 pair of auxiliary contact
  2: 2 pairs of auxiliary contact
- □: No. of poles
  2: 2 poles
  3: 3 poles
  4: 4 poles
- □/□: Rated operating current
- HH15: Series No.

Note: This switch may only be operated outside the cabinet.

3.2 Technical data

Specification		250	400	630	1000	1250	1600	2500	3150
No. of poles		3, 4, 3+N				3, 3+N			
Rated insulating voltage(V)		Ue=400V,Ui=690V.Ue=690V,Ui=1000V							
Rated operating voltage Ue(V)		AC400							
		AC690							
Conventional thermal current(A)		250	400	630	1000	1250	1600	2500	3150
Rated operating current(A)	400V:AC-22B	250	400	630	1000	1250	1600	2500	3150
	690V:AC-21B	250	400	630	1000	1250	1470	2500	2500
	690V:AC-22B	250	400	500	630	800	800	-	-
Rated Short-circuit making capacity (Peak)(kA)		39	50	60	60	85	85	130	130
Rated Short-time withstand cuuent(kA)		8	12.8	25	32	50	50	80	80
Mechanical life		15000	12000	12000	12000	1000	1000	500	300
Electric Life		1000	1000	300	150	100	100	100	100
Operating torque (N·m)		16	30	30	40	45	60	75	90
Conventional thermal current of auxiliary contact Ith 400, AC-15(A)		5							

J

«Электро-Профи» - www.ep.ru

3.3 Dimension (mm)

HH15-250/QP

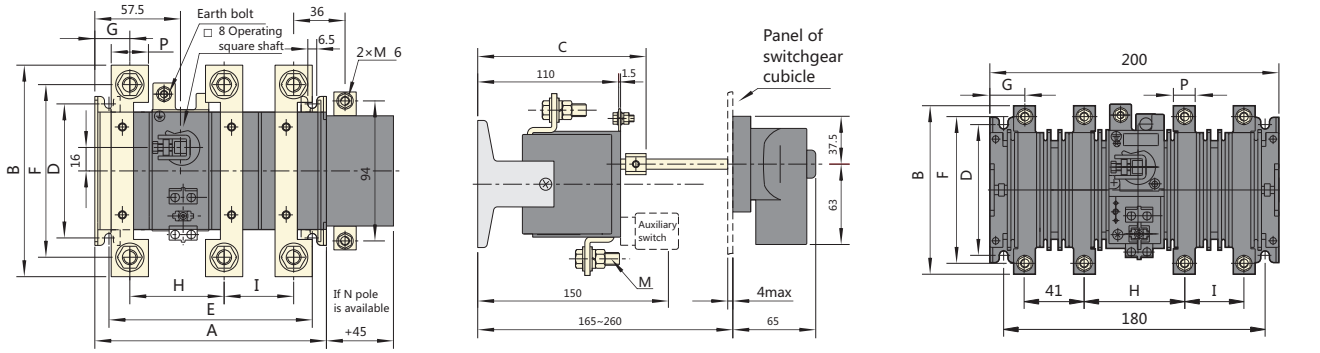

HH15P-400~1000/QP

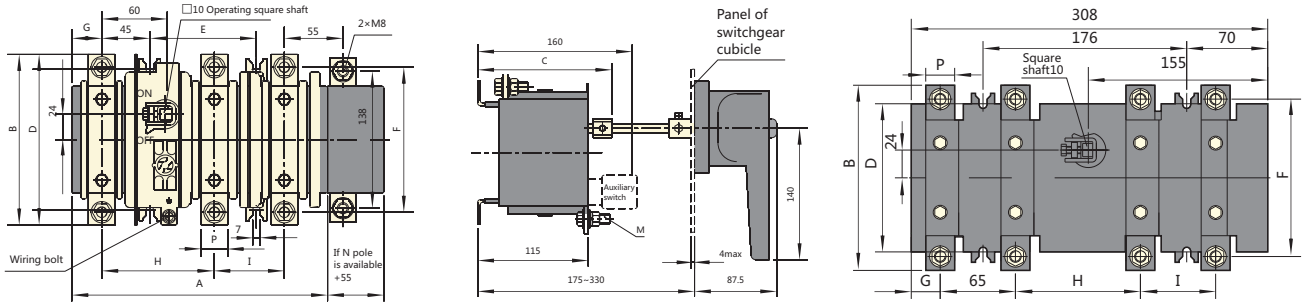

HH15P-1250/QP, 1600/QP

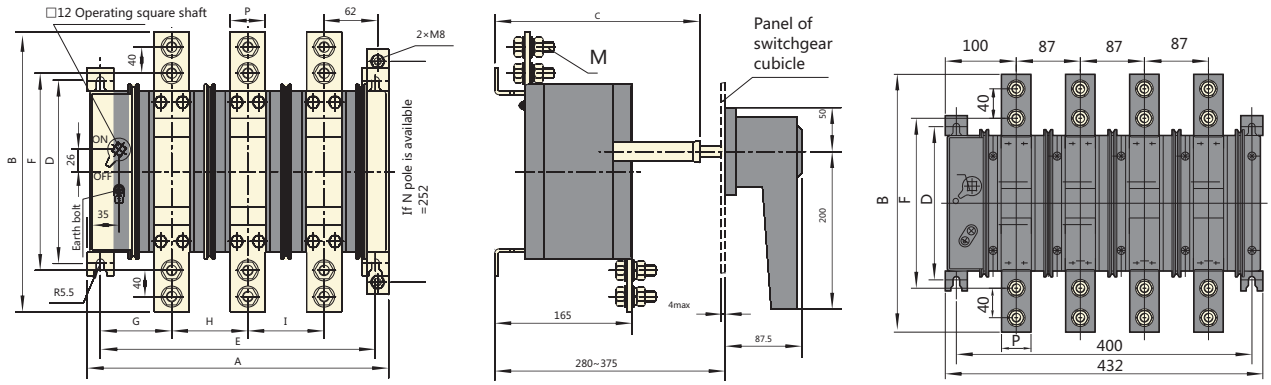

«Электро-Профи» - www.ep.ru

Overall & Installation Dimension of HH15P-2500/QP、3150/QP

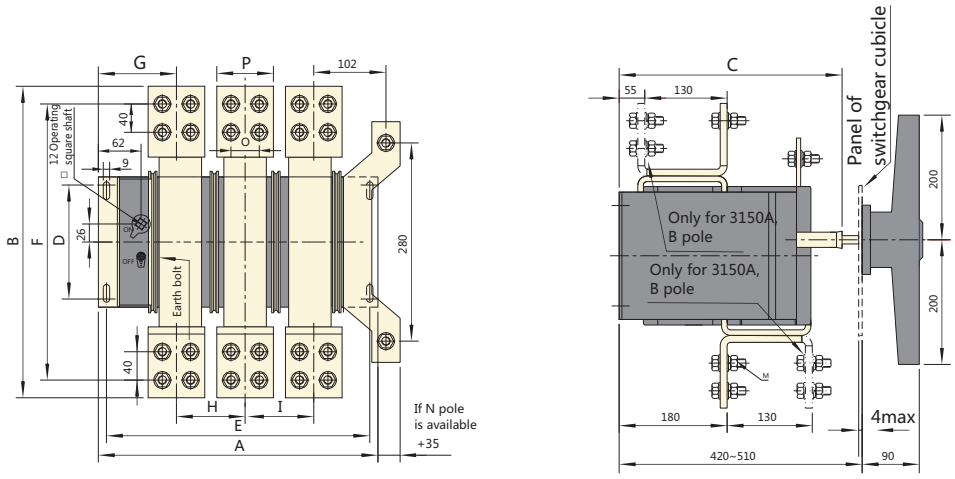

Specification	A	B	C	D	E	F	G	H	I	M	O	P
HH15-250/QP	155	143	133	90	135	118	22.5	65	45	10	-	25
HH15-400/QP	240	170	142	130	100	140	27	106	65	10	-	25
HH15-630/QP	240	170	142	130	100	140	27	106	65	10	-	25
HH15-1000/QP	240	218	142	130	100	178	27	106	80	12	-	40
HH15-1250/QP	345	350	188	208	315	230	82	87	87	12	-	40
HH15-1600/QP	345	350	188	208	315	230	82	87	87	12	-	50
HH15-2500/QP	395	440	342	152	372	390	115	97	97	12	40	80
HH15-3150/QP	395	470	342	152	372	420	115	97	97	12	50	100

3.4 Boring dimension (mm)

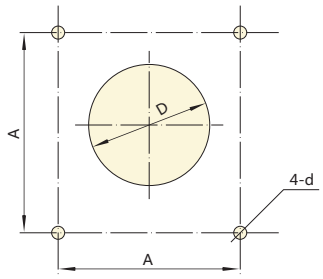

Specification	A	D	d
HH15-250/QP	65±0.2	$\Phi 42^{+4}_{0}$	$\Phi 4.5^{+0.5}_{0}$
HH15-630~1000/QP HH15P-1250~3150/QP	88±0.2	$\Phi 63^{+2}_{0}$	$\Phi 5.5^{+0.5}_{0}$

J

«Электро-Профи» - www.ep.ru



NH40 Switch Disconnector

1. General

1.1 Application

NH40 series Switch-disconnector is applicable for AC 50Hz, rated voltage AC 690V and below, DC440V and below, rated current up to 3150A. In the industrial enterprise power distribution equipment, it can be used to connect and disconnect the circuit and isolate the power supply frequently, especially the 125A~630A can be used as frequent connected and broken.

1.2 Standard: IEC/EN60947-3.

2. Type designation

2.1 Ordering information

NH40 - □/□□ □□□□F H K

- K means terminals is wiring buckle type
- H means with box body
- F means terminal protection type (only for 125A~250A)
- Ⅱ means miniature (only for central operation under 63A and side operation under 100A)
- T means the frame is transparent (only for single-cast switch under 630A)
- W means the handle is operated outside the cabinet. Without W means the handle is operated inside the cabinet.
- S means double-cast switch Without S means double single-cast switch
- C means front and side operation Without C means front and central operation
- 3 means Three-pole, 31 means Three-pole contact with auxiliary contact opening and closing 4 means Four-pole, 41 means Four-pole contact with auxiliary contact opening and closing
- Thermal current Ith (A)
- Design Code
- Indicating Disconnector
- Company code

2.2 Technical data






Thermal current Ith (A)		16	32	40	63	80	100	125	160	200	250	315	400	630
Associated fuse rating (A)		16	32	40	63	80	100	125	160	200	250	315	400	630
Rated insulation voltage(V) Ui		800												
Rated current (A)	400V AC21B	16	32	40	63	80	100	125	160	200	250	315	400	630
	400V AC22B	-	-	-	-	-	-	125	125	200	250	315	400	630
	400V AC23A	-	-	-	-	-	-	125	160	200	250	315	400	630
	690V AC21B	16	32	40	63	63	63	125	160	200	250	315	400	500
	690V AC22B	-	-	-	-	-	-	100	100	160	160	200	250	315
	690V AC23A	-	-	-	-	-	-	50	63	70	80	125	160	200
Operation force (N)		30~50						40~60				65~100		

«Электро-Профи» - www.ep.ru





Thermal current Ith (A)		1000	1250	1600	2000	2500	3150
Associated fuse rating (A)		1000	1250	2×800	2×1000	2×1250	
Rated insulation voltage(V) Ui		800					
Rated current (A)	400V AC21B	1000	1250	1600	2000	2500	3150
	400V AC22B	1000	1250	1600	2000	2500	3150
	690V AC21B	800	800	1000	1600	1600	2000
	690V AC22B	800	800	800	1000	1000	1250
Operation force (N)		200~300					

2.3 Handle in the middle position

2.3.1 Overall and mounting dimensions(63A~100A)

NH40-16A~100A

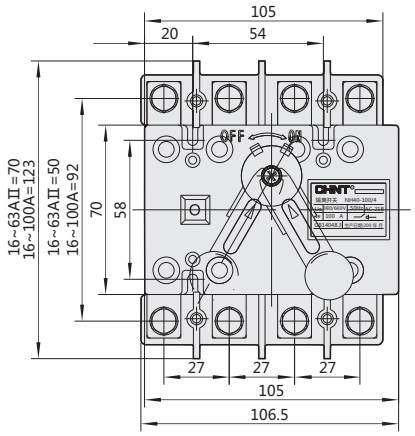

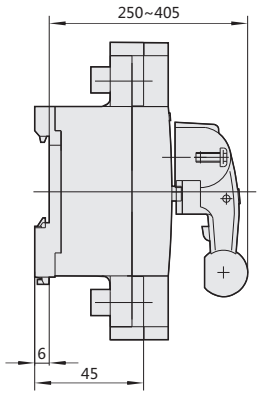

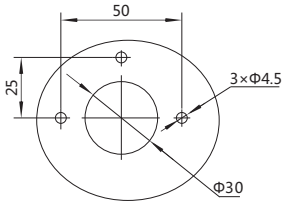

Mounting dimension of externally mounted handle

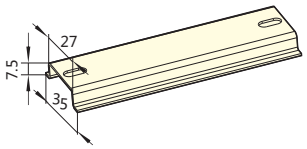

2.3.2 Overall and mounting dimensions(125A~630A)

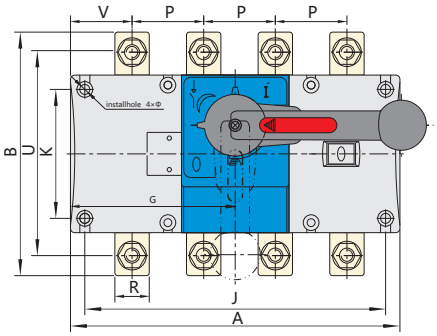

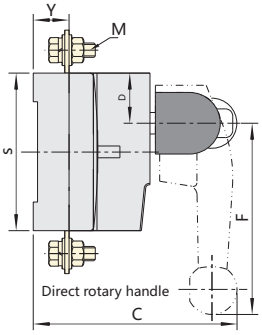

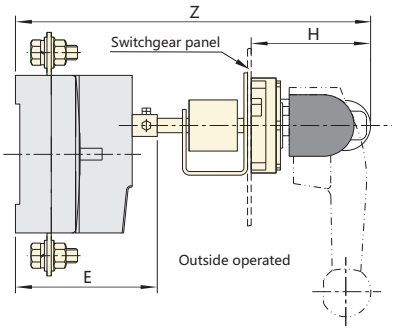

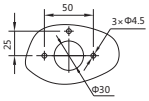

Mounting dimension of extended rotary handle

J

«Электро-Профи» - www.ep.ru

Mounting dimension of NH40 switch disconnector

Specification	NH40-□ NH40-□□/W Overall and mounting dimensions (mm)																		
Current	A	B	C	D	E	F	Φ	J	H	K	G	P	R	S	U	M	V	Y	Z
125A/3	140	135	130	27	93	135	5.5	120	85	65	55	36	18	85	115	8	32	24	355~460
160A/3	140	135	130	27	93	135	5.5	120	85	65	55	36	20	85	115	8	33	24	355~460
125A/4	170	135	130	27	93	135	5.5	150	85	65	85	36	18	85	115	8	31	24	355~460
160A/4	170	135	130	27	93	135	5.5	150	85	65	85	36	20	85	115	8	32	24	355~460
200A/3	180	170	145	35	103	135	6.5	160	85	90	60	50	25	110	142	10	44	25	365~470
250A/3	180	170	145	35	103	135	6.5	160	85	90	60	50	25	110	142	10	44	25	365~470
200A/4	230	170	145	35	103	135	6.5	210	85	90	110	50	25	110	142	10	38	25	365~470
250A/4	230	170	145	35	103	135	6.5	210	85	90	110	50	25	110	142	10	38	25	365~470
315A/3	230	240	195	50	135	160	7	210	105	140	84	65	32	160	205	12	53	37	440~555
400A/3	230	240	195	50	135	160	7	210	105	140	84	65	35	160	205	12	50	37	440~555
630A/3	230	260	195	50	135	160	7	210	105	140	84	65	40	160	220	12	53	37	440~555
315A/4	290	240	195	50	135	160	7	270	105	140	144	65	32	160	205	12	48	37	440~555
400A/4	290	240	195	50	135	160	7	270	105	140	144	65	35	160	205	12	45	37	440~555
630A/4	290	260	195	50	135	160	7	270	105	140	144	65	40	160	220	12	48	37	440~555

2.3.3 Overall and mounting dimensions(1000A-1600A)

1000A~1600A with direct rotary handle

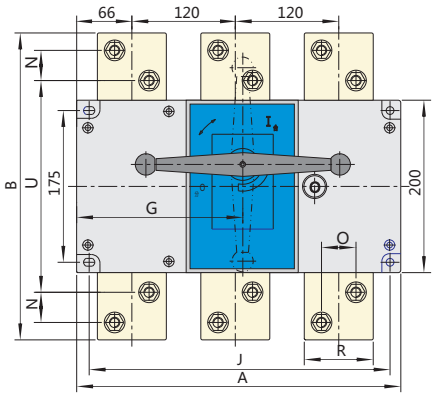

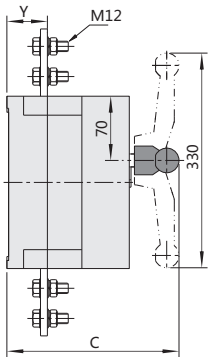

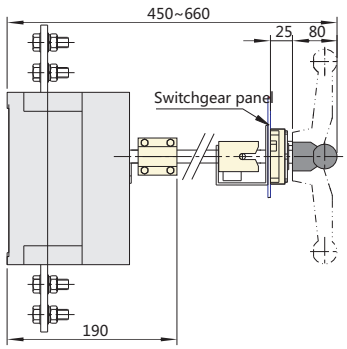

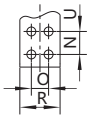

connection board1250A/1600A

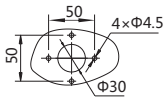

Mounting dimension of externally mounted handle

«Электро-Профи» - www.ep.ru

Mounting dimension of NH40 switch disconnector

Specification	NH40-□□ NH40-□□/W Overall and mounting dimensions (mm)									
Current	A	B	C	G	J	N	R	O	U	Y
1000A/3	378	316	240	192.5	353	20	60	35	240	48
1250A/3	378	356	240	192.5	353	35	70	40	246	48
1600A/3	378	356	240	192.5	353	35	80	40	246	48
1000A/4	498	316	240	252.5	473	20	60	35	240	48
1250A/4	498	356	240	252.5	473	35	70	40	246	48
1600A/4	498	356	240	252.5	473	35	80	40	246	48

2.3.4 Overall and mounting dimensions(2000A-3150A)

Operation outside the switchgear Remark:
C is the longest one among outside operation dimensions.

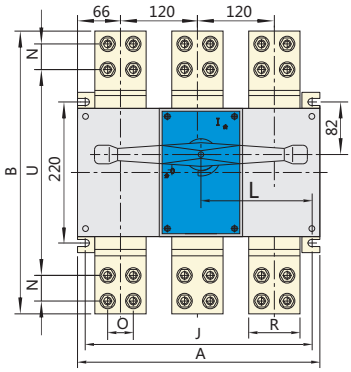

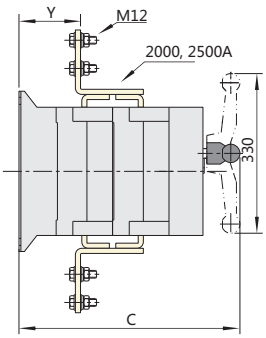

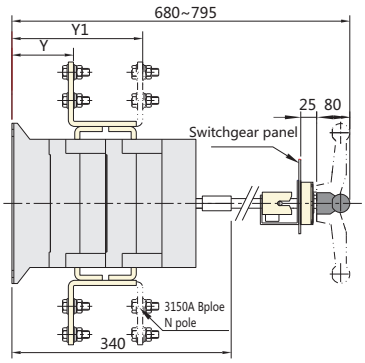

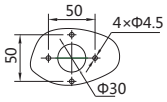

Mounting dimension of NH40 inside operation and NH40 switch disconnector

Specification	NH40-□□ NH40-□□/W Overall and mounting dimensions (mm)									
Current	A	B	C	J	L	N	O	R	Y	Y1
2000A/3	378	450	374	353	173.5	40	40	80	80	-
2500A/3	378	450	374	353	173.5	40	40	80	80	-
3150A/3	378	510	374	353	173.5	50	50	120	80	230
2000A/4	498	450	374	473	235	40	40	80	80	-
2500A/4	498	450	374	473	235	40	40	80	80	-
3150A/4	498	510	374	473	235	50	50	120	80	230

J

«Электро-Профи» - www.ep.ru

Fuse-Switch Disconnector

Thermal current	63	125	160	250	400	630	800	1000	1250
HH15/QSA	HH15-63/ QSA	HH15-125/ QSA	HH15-160/ QSA	HH15-250/ QSA	HH15-400/ QSA	HH15-630/ QSA	HH15-800/ QSA	HH15-1000/ QSA	HH15-12500/ QSA
NHR17			NHR17-160	NHR17-250	NHR17-400	NHR17-630			
NHR40			NHR40-160	NHR40-250	NHR40-400	NHR40-630			
NHRT40			NHRT40-160	NHRT40-250	NHRT40-400	NHRT40-630			

HH15/QSA



NHR17



NHR40



NHRT40



«Электро-Профи» - www.ep.ru



HH15/QSA Fuse-switch Disconnector

1. General

1.1 Application

Mainly used in the distributing and motor circuit which has high short-circuit current, and acted as main switch or master switch infrequently operated by hand, it is particularly suitable in the relative high class with drawable low voltage complete equipment. They provide safety isolation and protection against overcurrent for any low voltage electrical circuit.

1.2 Standard: IEC/EN 60947-3.

1.3 General characteristic

Full-enclosed structure

Unique rolling insert type contact system.

Note: This switch should be used with RT36 (NT,RT16) or RT20 series fuses provided by the user. This switch may only be operated outside the cabinet.

2. Type designation

2.1 Ordering information

HH15 - □/□ □ □

- Series No.
- Rated operating current
- No. of poles
  2: 2 poles
  3: 3 poles
  4: 4 poles
- No. of auxiliary contacts
  0: no auxiliary contact
  1: 1 pair of auxiliary contact
  2: 2 pairs of auxiliary contact
- QSA: Switch-disconnector fuse (to be matched with fuse)

Note: User should order RT(NT) series additional to assemble a switch-disconnector fuse

2.2 Technical data

Specification		HH15-63	HH15-125	HH15-160	HH15-250	HH15-400	HH15-630	HH15-800	HH15-1000	HH15-1250
No. of poles		3, 4, 3+N						3, 4		
Rated insulating voltage Ui(V)		Ue=400V,Ui=690V.Ue=690V,Ui=1000V						800V		
Rated operating voltage Ue(V)		AC400						AC415		
		AC690						AC690		
Conventional thermal current(A)		63	125	160	250	400	630	800	1000	1250
Rated operating current(A)	400V:AC-23B/415V:AC-22B	63	125	160	250	400	630	800	1000	1250
	690V:AC-23B/690V:AC22B	63	100	160	250	315	425	500	500	500
Rated Limiting Short-circuit current 400:V/H(kA)		100	100	100	100	100	100	100	100	100
Rated Limiting Short-circuit current when 690V(kA)		50	50	50	50	50	50	50	50	50
Mechanical life		15000	15000	12000	12000	12000	3000	500	500	500
Electric Life		1000	1000	300	300	300	200	100	100	100
Rated current of fuse 400V/690V(A)		63/63	125/100	160/160	250/250	400/315	630/425	800/500	1000/630	1250/800

J

«Электро-Профи» - www.ep.ru

Specification		HH15-63	HH15-125	HH15-160	HH15-250	HH15-400	HH15-630	HH15-800, 1000, 1250
Model of fuse	400V/415V	RT16-00	RT16-00	RT16-00	RT16-1	RT16-2	RT16-3	HDLRS3
		RT20	RT20	RT20	RT20	RT20	RT20	
		NT00	NT00	NT00	NT1	NT2	NT3	
	690V	RT16-00	RT16-00	RT16-00	RT16-1	RT16-2	RT16-3	HDLRS3
		NT00	NT00	NT00	NT1	NT2	NT3	
Operating torque (N·m)		7.5	7.5	16	16	16	30	40
Conventional thermal current of auxiliary contact Ith 400, AC-15(A)		5	5	5	5	5	5	5

2.3 Dimension (mm)

HH15-63, 125/QSA

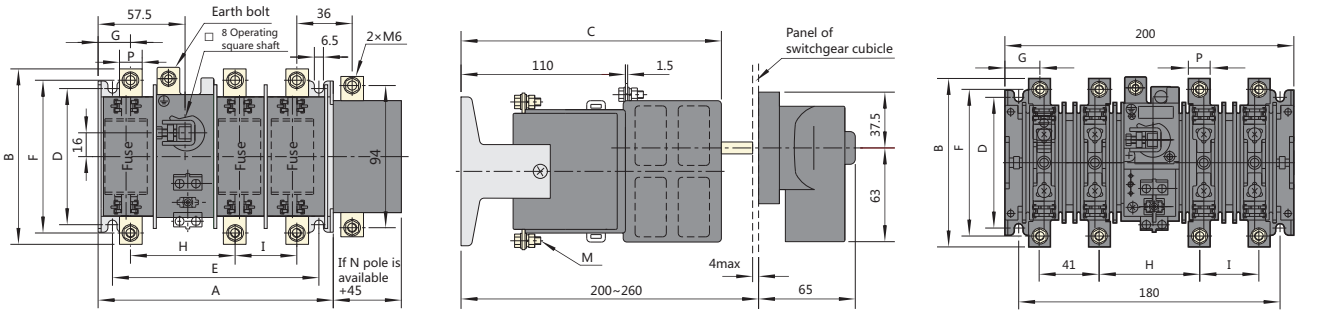

HH15-160, 250, 400/QSA

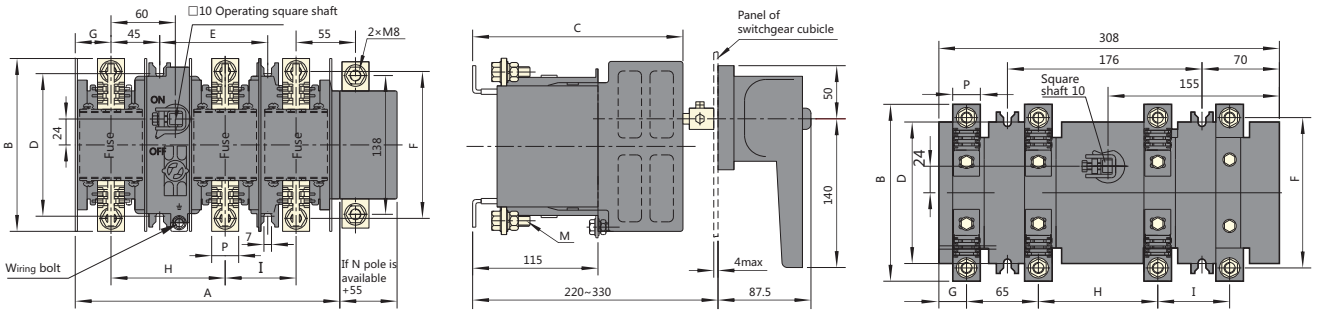

HH15-630/QSA

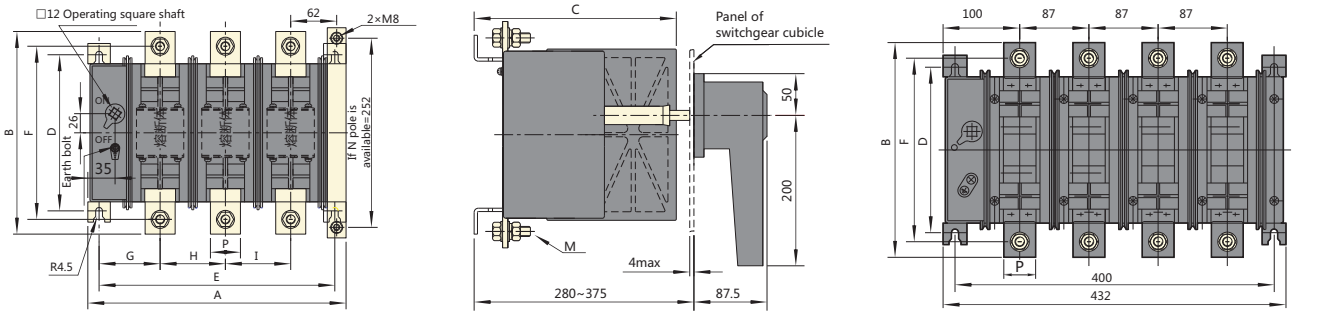

«Электро-Профи» - www.ep.ru

HH15-800~1250/QSA

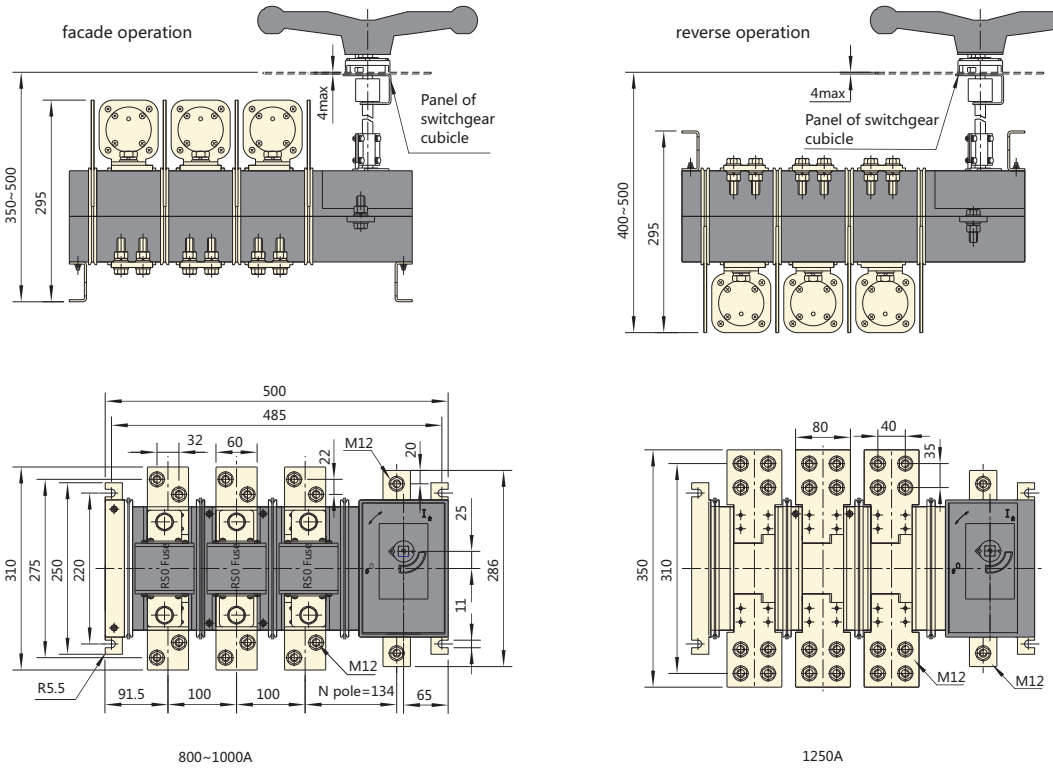

800~1000A

1250A

Specification	A	B	C	D	E	F	G	L1	L2
HH15-63	155±1.25	100±1.10	175±1.25	90±0.75	135±1.25	88±1.10	M5	165~225	165~385
HH15-125	155±1.25	116±1.10	175±1.25	90±0.75	135±1.25	101±1.10	M6	165~225	160~385
HH15-160	240±1.45	146±1.25	178±2.0	130±1.25	100±1.1	126±1.25	M8	220~270	220~390
HH15-250	240±1.45	160±1.25	198±2.3	130±1.25	100±1.1	135±2.0	M10	220~270	220~390
HH15-400	240±1.45	160±1.25	198±2.3	130±1.25	100±1.1	135±2.0	M10	220~270	220~390
HH15-630	345±1.8	270±2.6	242±2.6	208±1.6	315±1.6	230±2.3	M12	250~265	250~529

2.4 Boring dimension

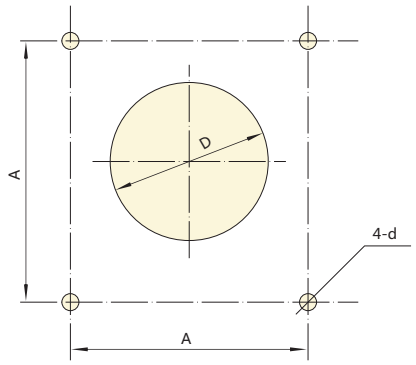

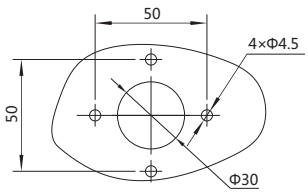

HH15-800~1250/QSA

Opening size of the handle mounting panel

Specification	A	D	d
HH15-63, 125/QSA	65±0.2	$\Phi 42^{+4}_{0}$	$\Phi 4.5^{+0.5}_{0}$
HH15-160~630/QSA	88±0.2	$\Phi 63^{+2}_{0}$	$\Phi 5.5^{+0.5}_{0}$

J

«Электро-Профи» - www.ep.ru



NHR17 Fuse-Switch Disconnector

1. General

1.1 NHR17 series fuse-swith disconnector is a new product developed by our company. Rated insulation voltage up to 800V. rated operational voltage up to 690V. rated operational current up to 630A, rated frequency 50Hz, in the distribution circuit and motor circuit which has high short-circuit current as the power switch, isolating switch, emergency switch as well as circuit protection, but normally it is not used to make and break a single motor directly.

1.2 Standard: IEC/EN 60947-3.

2. Type designation

NHR 17 -□/□ □

- 1: With micro-gap switch
  0: Without micro-gap switch
- No. of poles
- Conventional thermal current
- Series No.

«Электро-Профи» - www.ep.ru

3. Technical data

Conventional thermal current(A)		63(32)	160	250	400	630
Rated insulation voltage V		800				
Rated current A	690V AC21	32、63	160	250	400	630
	400V AC22	32、63	160	250	400	630
	400V AC23	-	160	250	400	630
	690V AC21	-	160	250	400	630
	690V AC22	-	100	200	315	425
	690V AC23	-	100	160	315	315
Operating force N		≤120	≤250	≤350	≤350	≤450
Associated fuse	Model	RT19-125	NT00、RT16-00	NT1、RT16-1	NT2、RT16-2	NT3、RT16-3
	Rated current of matched fuse in 400V (breaking capacity)	20, 25, 32, 35,40, 50, 63 (≥20kA)	20, 25, 32, 35, 40, 50, 63, 80, 100, 125,160 (≥100kA)	80, 100, 125, 160,200, 224, 250 (≥100kA)	125,160, 200, 224, 250, 300, 315, 355,400 (≥100kA)	315, 355, 400, 425, 500, 630 (≥100kA)
	Rated current of matched fuse in 690V (breaking capacity)	-	20, 25, 32, 35, 40, 50, 63, 80,100 (≥50kA)	80, 100, 125, 160, 200 (≥50kA)	125, 160, 200, 224, 250, 300, 315(≥50kA)	315, 355, 400, 425 (≥50kA)

4. Overall and mounting dimensions (mm)

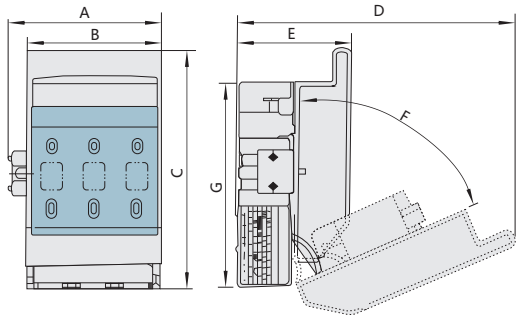

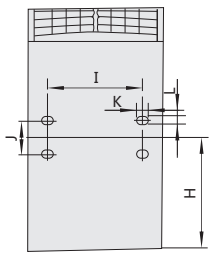

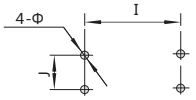

Specification	A	B	C	D	E	F	G	H	I	J	K	L	Φ
63(32)/2	-	75	135	165	77	70°	120	72	-	104	-	-	6
63(32)/3	-	105	135	165	77	70°	120	72	31	104	-	-	6
63(32)/3	-	150	135	165	77	70°	120	72	75	104	-	-	6
160/3	123	110	186	215	90	66°	160	87	74	25	9.5	6.5	-
250/3	196	184	266	240	118	70°	230	125	114	50	25	9	-
400/3	260	250	330	390	145	72°	295	155	150	50	-	-	9
630/3	260	250	330	390	145	72°	295	155	150	50	-	-	9

J

«Электро-Профи» - www.ep.ru



NHR40 Fuse-switch Disconnector

1. General

1.1 NHR40 series switch-disconnector with fuse is applicable in the circuit of AC50Hz, rated voltage AC690V and below, DC440V and below, rated current up to 630A.
NHR40 series are infrequently manually operated multipolar fuse combination switches, They break or switch off on load and provide safely isolation and protection against overcurrent for any voltage electrical circuit.

1.2 Standard: IEC/EN 60947-3.

2. Type designation

N HR 40 - □ / □ □ □ □

- H:With box(only applicable to front operation)
- W: Extended rotary handle
  Blank: Direct rotary handle
- C: Lateral operation
  Blank: Front operation
- Three-pole
  Four-pole
- Conventional thermal current
- Series No.

Note: This switch should be used with RT36 (NT,RT16) or RT20 series fuses provided by the user.

«Электро-Профи» - www.ep.ru

3. Technical data

Conventional thermal current (A)		63	160	250	400	630
Rated current voltage (A)		20、32、63	100、125、160	200、250	315、400	630
Rated insulation voltage (V)		690V				800V
Associated current (A)	400V AC22	20、32、63	100、125、160	200、250	315、400	630
	400V AC23	20、32、63	100、125、160	200、250	315、400	630
	690V AC22	20、32、63	100、125、160	200、250	315	425
	690V AC23	20、32、63	100、125、160	200、250	315	425
Rated current (A)	230V DC22	20、32、63	100、125、160	200、250	315、400	630
	230V DC23	20、32、63	100、125、160	200、250	315、400	630
	440V DC22	20、32、63	100、125、160	200、250	315	425
	440V DC23	20、32、63	100、125、160	200、250	315	425
Operation force (N)		60~80	65~100	80~120	100~150	230
Associated fuse	Specification	00C	00	1	2	3

Remark:

1) With terminal shield

2) Two phases are connected in series according to the phase character

4. Structure and features

4.1 The switch adopts full-enclosed structure of reliable thermal characteristic to ensure reliable operation.

4.2 Each phase has two groups of contact system with double breaking points, these two groups of contacts are serially connected, which has improved its current breaking capability, and ensures the reliability of power supply disconnecting.

4.3 Manual rotated operation mechanism has energy storage spring,so the active contact can operate swiffly with no relation with operation speed.

5. Overall and mounting dimensions (mm)

Facade operation inside the switchgear

≤63A

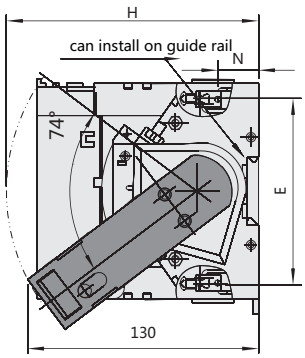

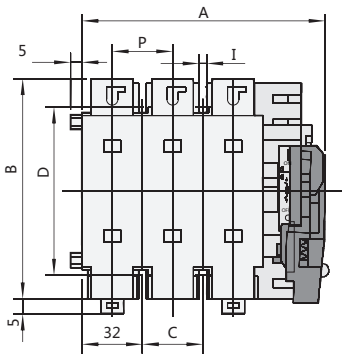

J

«Электро-Профи» - www.ep.ru

Front operation inside the switchgear

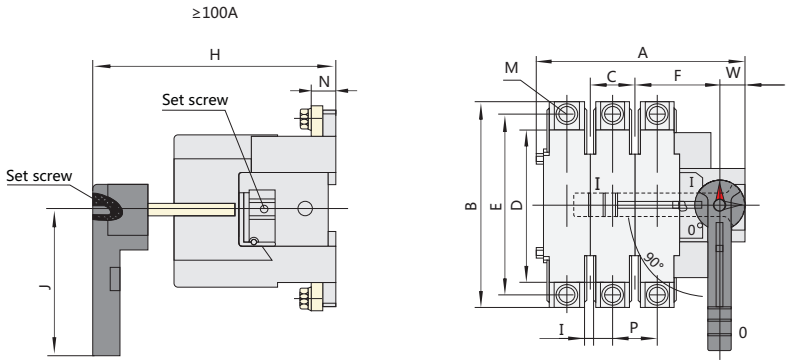

Facade operation outside the switchgear

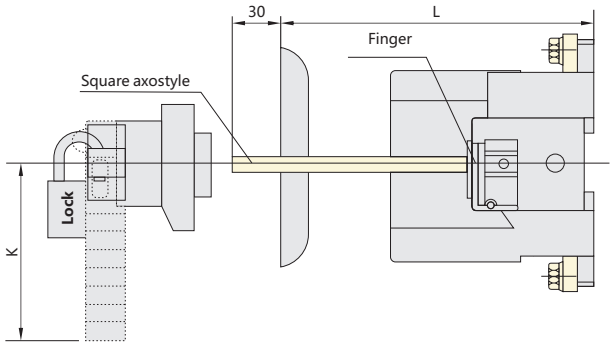

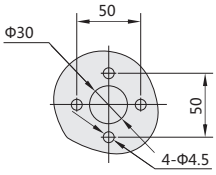

100-400A Boring dimension on the panel

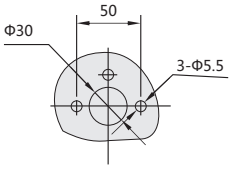

630A Boring dimension on the panel

Specifcation	Overall and mounting dimensions														
	A	B	C	D	E	F	H	I	J	L	M	N	W	P	K
63/2	108	120	-	92	96	-	160	4.5	-	-	-	22	-	32	-
63/3	140	120	32	92	96	-	160	4.5	-	-	-	22	-	32	-
63/4	172	120	60	92	96	-	160	4.5	-	-	-	22	-	32	-
160/2	128	162	36	120	142	67.5	190	5.5	115	205~325	8	19	21	36	126
160/3	165	162	36	120	142	67.5	190	5.5	115	205~325	8	19	21	36	126
160/4	202	162	36	120	142	67.5	190	5.5	115	205~325	8	19	21	36	126
250/2	185	195	60	160	166	91.5	210	5.5	145	205~325	10	19	21	60	126
250/3	240	195	60	160	166	91.5	210	5.5	145	205~325	10	19	21	60	126
250/4	300	195	60	160	166	91.5	210	5.5	145	205~325	10	19	21	60	126
400/2	214	205	66	170	176	122	210	5.5	145	205~325	10	25	21	66	126
400/3	280	205	66	170	176	122	210	5.5	145	205~325	10	25	21	66	126
400/4	346	205	66	170	176	122	210	5.5	145	205~325	10	25	21	66	126
630/3	346	300	250	250	268	39	350	Φ9	190	330~440	12	72	37	80	190
630/4	426	300	250	250	268	39	350	Φ9	190	330~440	12	72	37	80	190

«Электро-Профи» - www.ep.ru

Front operation with box type

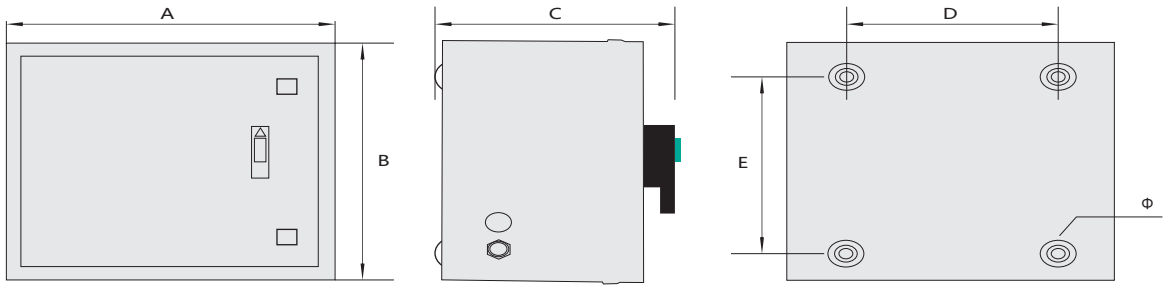

Specification	A	B	C	D	E	Φ
HR40-20-63/3	306±1.25	250±1.25	155±1.25	236±1.25	186±1.25	9
HR40-100/160/3	306±1.25	250±1.25	155±1.25	236±1.25	186±1.25	9
HR40-200/250/3	380±1.25	400±1.25	215±1.25	260±1.25	250±1.25	9
HR40-315/400/630/3	570±1.25	484±1.25	310±1.25	490±1.25	404±1.25	9
HR40-20-63/4	306±1.25	250±1.25	155±1.25	236±1.25	186±1.25	9
HR40-100/160/4	306±1.25	250±1.25	155±1.25	236±1.25	186±1.25	9
HR40-200/250/4	424±1.25	314±1.25	315±1.25	356±1.25	250±1.25	9
HR40-315/400/630/4	570±1.25	484±1.25	310±1.25	490±1.25	404±1.25	9

«Электро-Профи» - www.ep.ru



NHRT40 Vertical Fuse-switch Disconnector

1. General

1.1 Application

NHRT40 series vertical fuse-switch disconnector is applicable in the circuit of rated voltage AC690V and below, rated current AC 160A-630A, rated frequency of 50Hz.

NHRT40 series are infrequently manually operated multipolar fuse combination switches.

They break or switch off on load and provide safely isolation and protection against overcurrent for any voltage electrical circuit.

1.2 Standard: IEC 60947-3.

2. Type designation

NHRT 40 - □/□ □□ □

- B:Means foundation bed
- N:Means new type(different connection mode)
- L: Three phases breaking and making simultaneously; Blank: independent operation phase to phase
- No. of poles
- Conventional thermal current
- Series No.

3. Structure and features

3.1 Structure: The switch is consisted of underpan, base, cover, handle and shield.

3.2 NT series fuse link is installed in the cover to act as knife of active contact.

3.3 The handle moves fan-shapely based on the pivot of underpan, makes the cover and fuse make and break together, it is with enough space and remarkable disconnection point which meets the requirement of disconnector switch.

3.4 It is convenient to dismount the base and underpan, which is easy to mount the base to the busbar safely and reliably.

3.5 There is arc extinguisher on the underpan, which ensures breaking capacity of the switch.

«Электро-Профи» - www.ep.ru

4. Technical data

Conventional thermal current (A)		160	250	400	630
Rated insulation voltage (V)		800			
Rated current (A)	400V AC20	160	250	400	630
	400V AC21	160	250	400	630
	400V AC22	160	250	400	630
	690V AC20	160	250	400	630
	690V AC21	100	200	315	425
	690V AC22	100	160	315	315
Specification of associated fuse	Model	00	1	2	3
	400V Rated current of fuse (Breaking capactiy) A	20, 25, 32, 35, 40, 50, 63, 80, 100, 125, 160 (≥100kA)	80, 100, 125, 160, 200, 224, 250 (≥100kA)	125, 160, 200, 224, 250, 315, 355, 400 (≥100kA)	315, 355, 400, 425, 500, 630 (≥100kA)
	690V Rated current of fuse (Breaking capactiy) A	20, 25, 32, 35, 40, 50, 63, 80, 100 (≥50kA)	80, 100, 125, 160, 200 (≥50kA)	125, 160, 200, 224, 250, 300, 315 (≥50kA)	315, 355, 400, 425 (≥50kA)

5. Overall and mounting dimensions (mm)

NHRT40-160 Independent operation phase to phase

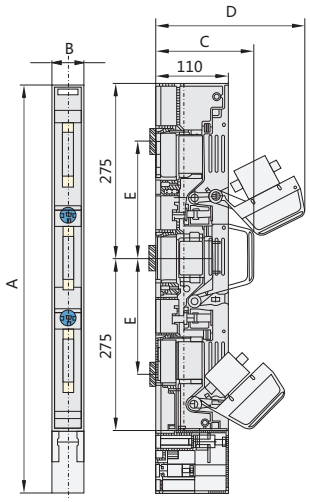

NHRT40-160 Simuitaneous operation of three phases

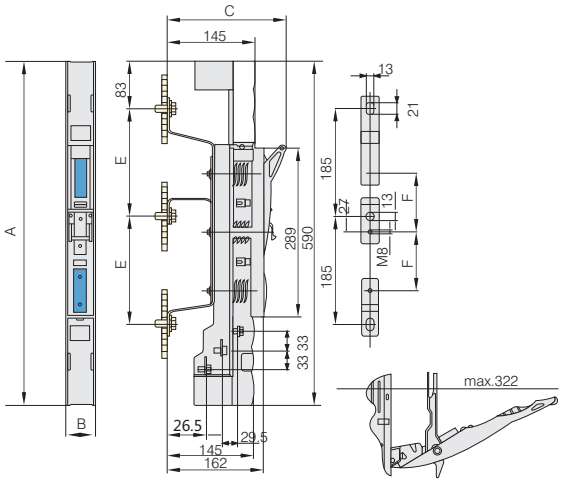

J

«Электро-Профи» - www.ep.ru

NHRT40-250, 400, 630 Independent operation phase to phase

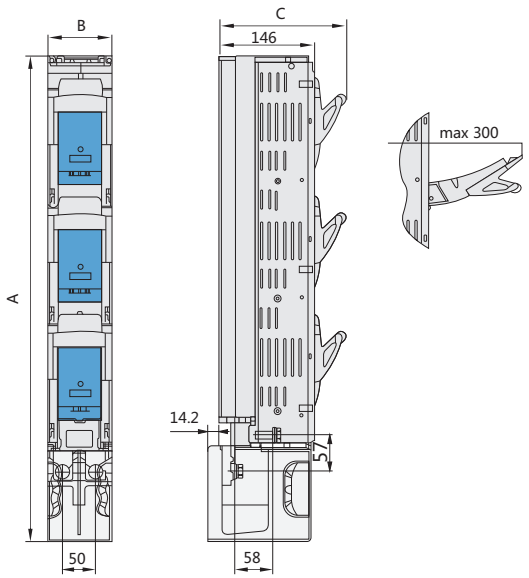

NHRT40-250, 400, 630 Simuitaneous operation of three phases

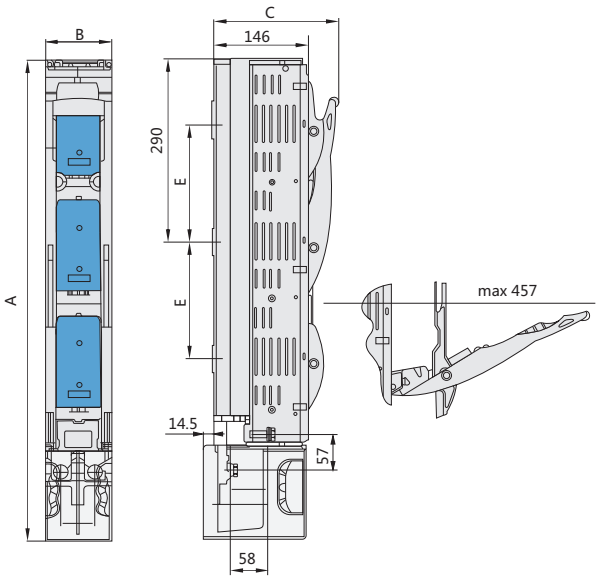

Model	A	B	C	D	E	F
NHRT40-160 Independent operation phase to phase	650	49	150	230	185	
NHRT40-160 Simuitaneous operation of three phases	590	49	198	322	185	100
NHRT40-250, 400, 630 Independent operation phase to phase	764	99	195	300	185	
NHRT40-250, 400, 630 Simuitaneous operation of three phases	764	99	195	457	185	

NHRT40-40-160/3N

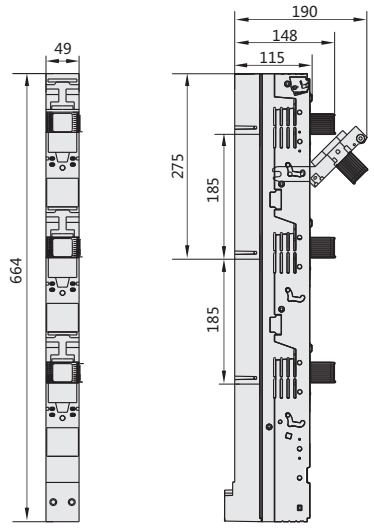

NHRT40-250-630/3N

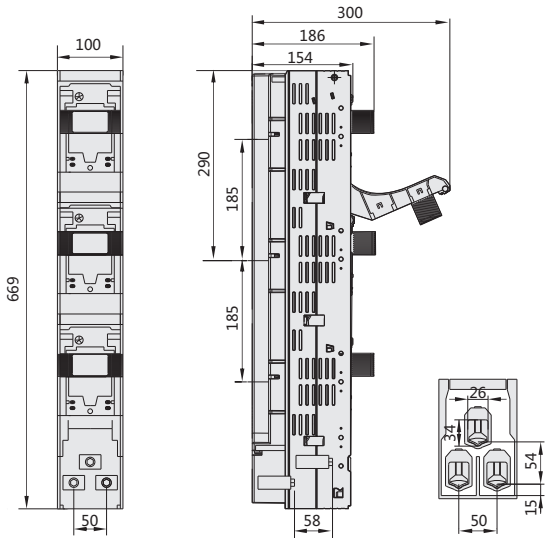

«Электро-Профи» - www.ep.ru

NHRT40-160/3LN

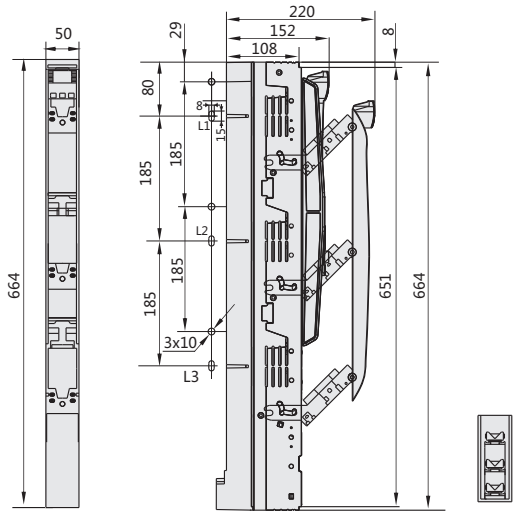

NHRT40-250-630/3LN

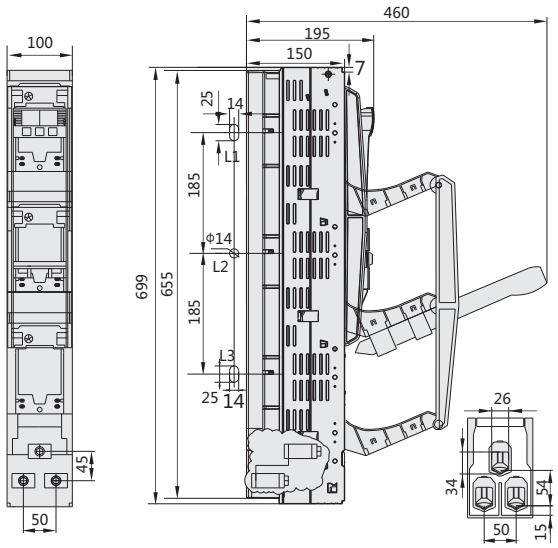

NHRT40-160/3B

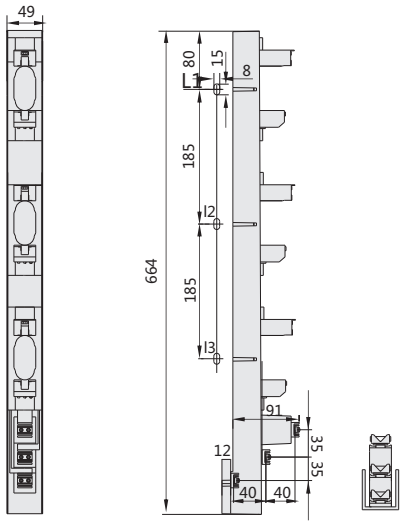

NHRT40- 250-630/3B

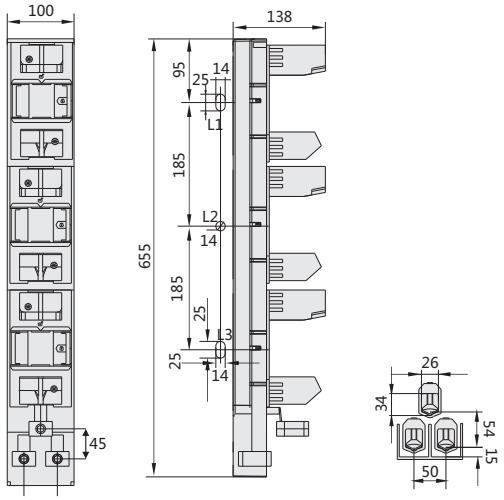

J

«Электро-Профи» - www.ep.ru

Changeover Switch

Thermal current	16, 32, 40, 63, 80, 100	125	160	200	250	315	400
HH15/QAS		HH15-125/QAS	HH15-160/QAS				HH15-400/QAS
HH15/QPS					HH15-250/QPS		
HH15/QSS	HH15-63/QSS	HH15-125/QSS	HH15-160/QSS		HH15-250/QSS		HH15-400/QSS
NH40S		NH40-125S	NH40-160S	NH40-200S	NH40-250S	NH40-315S	NH40-400S
NH40SZ	NH40-16, 32, 40, 63, 80, 100SZ	NH40-125SZ	NH40-160SZ	NH40-200SZ	NH40-250SZ	NH40-315SZ	NH40-400SZ

HH15/QAS





HH15/QPS



HH15/QSS





NH40S







NH40SZ









«Электро-Профи» - www.ep.ru

630	1000	1250	1600	2000	2500	3150
HH15-630/QAS	HH15-1000/QAS					
HH15-630/QPS	HH15-1000/QPS	HH15-1250/QPS	HH15-1600/QPS		HH15-2500/QPS	HH15-3150/QPS
HH15-630/QSS						
NH40-630S	NH40-1000S	NH40-1250S	NH40-1600S	NH40-2000S	NH40-2500S	NH40-3150S
NH40-630SZ	NH40-1000SZ	NH40-1250SZ	NH40-1600SZ			










J



NZ7 Automatic Transfer Switching Equipment

1. General

Applicable to the three-phase four-line two-circuit power supply network with an AC power frequency of 50Hz, rated operational voltage of AC400V, and rated operational current of up to 630A, the NZ7 series automatic transfer switching equipment can automatically connect one or several loads from one power source to another to ensure the normal power supply of the load circuit.

This product is applicable to the important places such as industrial, commercial, and storied buildings, and residential houses.

Certificate: KEMA
Execution standard: IEC/EN 60947-6-1

2. Type designation

N Z 7 - □□/ □□□□□□□

- Transfer mode without code: Users can set the matter
  R: self-throwing and self-reset (power network to power network)
  S: self-throwing and not self-reset (power network to power network)
  F: self-throwing and self-reset (power network to power generation)
- Controller type
  A: basic type
- Structure
  Y: integrated (type)
  Without code: separated (type)
- Actuator circuit breaker type
  Without code: NM1
- Rated current (Arabic numerals)
- Release with nothing as its code: NM1
- Number of poles: 3, 4
- Breaking capacity code: S, H, R
- Frame size rated current (Arabic numerals)
- Design serial number
- Automatic transfer switching equipment
- Company code

3. Operating conditions

3.1 Ambient air temperature
The upper limit for the ambient air temperature is +40℃, lower limit -5℃, and the mean value of the temperature is not greater than + 35℃ within 24 hours;

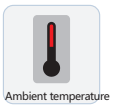

3.2 Altitude
Altitude: not higher than 2,000m for the installation site.



3.3 Atmospheric conditions:
When the ambient air temperature is +40℃, the relative humidity of the air shall not be higher than 50%, a higher relative humidity is allowed at a lower temperature, e.g. 90% at +20℃, and special measures shall be taken for the condensation occasionally produced due to temperature changes.



3.4 Class of pollution:
Class of pollution: 3

«Электро-Профи» - www.ep.ru

4. Technical data

Product type	NZ7-63			NZ7-125				NZ7-250				NZ7-400			NZ7-630		
Up to standard	IEC/EN 60947-6-1																
Actuator circuit breaker	NM1-63			NM1-125				NM1-250				NM1-400			NM1-630		
Parameters of electrical characteristics																	
Operating environment temperature	-5℃~+40℃																
Altitude	2000m																
Class of pollution	3																
Specification for current	10,16,20,25, 32,40,50,63A			16,20,25,32,40, 50,63,80,100A				100,125,160, 180,200,225A				250,315, 350,400A			400,500, 630A		
Rated operational voltage(Ue)	400V 50Hz																
Nominal insulation voltage(Ui)	AC500V			AC800V													
Rated impulse withstand voltage	6kV			8kV													
Number of poles	3P		4P	3P			4P	3P			4P	3P, 4P			3P, 4P		
Short circuit breaking capacity codes	S	H	H	S	H	R	H	S	H	R	H	S	H	R	S	H	R
Rated short circuit making capacity(Icm)	31.5	73.5	73.5	52.5	105	143	105	52.5	105	143	105	73.5	110	154	73.5	110	154
Rated short circuit breaking capacity(Icn)	15	35	35	25	50	65	50	25	50	65	50	35	50	70	35	50	70
Service life	6000 times			6000 times				6000 times				4000 times			3000 times		
Usage category	AC-33B																
Electric equipment grade	CB Class																
Protection level	IP30(except the main circuit terminal)																
Protection	Overload protection/short circuit protection																
Controller characteristic																	
Controller	Type A(basic type)																
Rated control supply voltage Us	230V 50Hz																
Installation mode for the controller	Integrated/separated (as installed on the surface of the cabinet)																
Operating transfer time (no time delay)	≤3.2s			≤3.5s				≤3.6s				≤4s			≤5s		
Power consumption	≤10W																
Installation and connection																	
Installation mode	Fixed type																
Connection mode	Front connection																

5. Characteristics and functions

The NZ7 series automatic transfer switching equipment (hereinafter referred to as automatic transfer switch) is the CB class product of a new generation combined with the advanced digital electronic control technique. The product features compactness, energy conservation, convenient installation, reliable dual-interlock protection, etc., and is advanced and complete in terms of function.



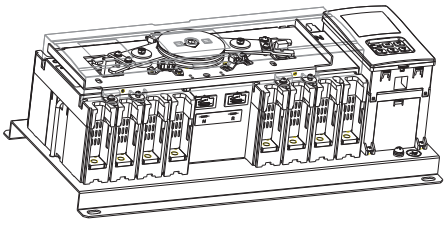

Single motor structure, compact

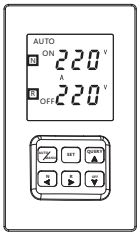

Visualized management

J

«Электро-Профи» - www.ep.ru

5.1 Compactness

The transfer function is achieved via using the forward and backward rotation of the only one motor which allows for reducing the product' s height and room for its installation.

5.2 Energy saving

The driving mechanism works in the mode of motor drive with less power consumption and noise.

Type A controller (long-term service)	Transmission mechanism (short-term service)		
	Type 63/Type 100	Type 225	Type 400/Type 630
≤10W	20W	40W	20W

5.3 Advanced and multipurpose functions

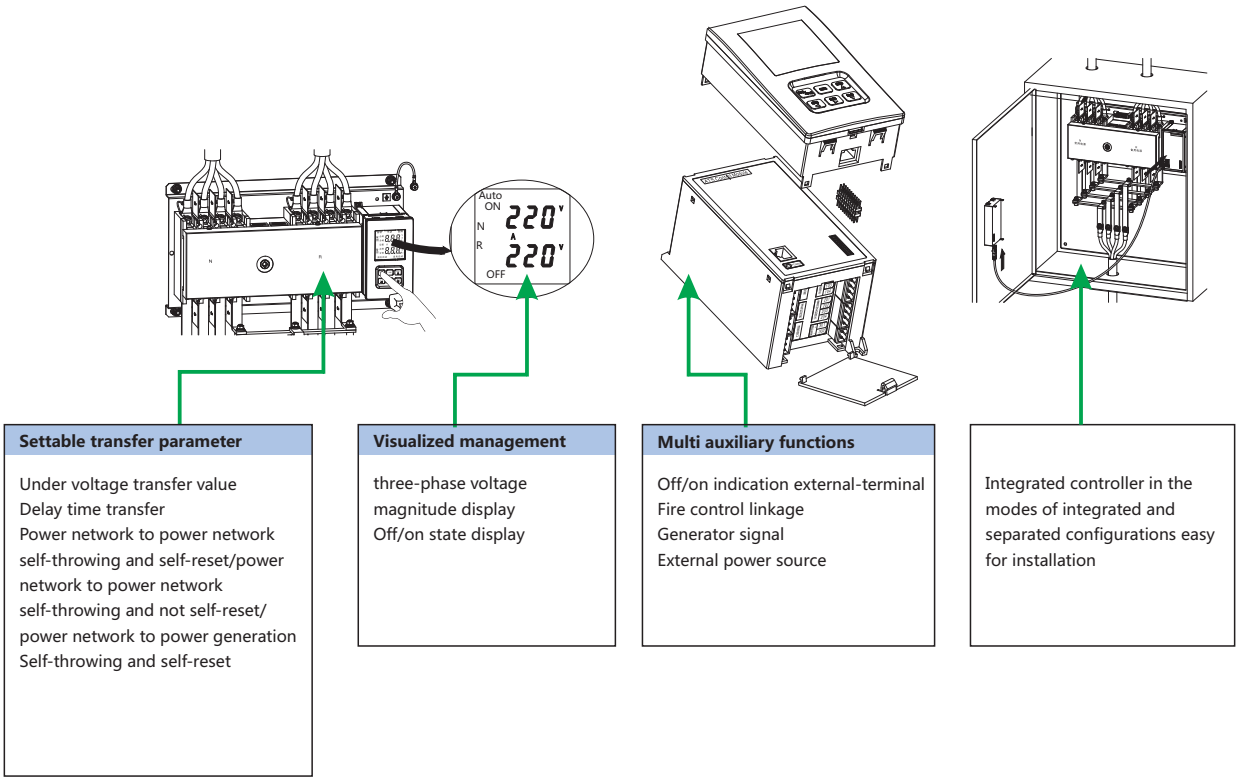

Settable transfer parameter

Under voltage transfer value
Delay time transfer
Power network to power network self-throwing and self-reset/power network to power network self-throwing and not self-reset/ power network to power generation
Self-throwing and self-reset

Visualized management

three-phase voltage magnitude display
Off/on state display

Multi auxiliary functions

Off/on indication external-terminal
Fire control linkage
Generator signal
External power source

Integrated controller in the modes of integrated and separated configurations easy for installation

5.4 Dual-interlock protection

The mechanical-electrical interlock duplex protection is used to prevent two power sources from being connected simultaneously to the load, wherein the electrical interlock works in the breaker contact position mode for directly indicating the automatic transfer switch to perform the genuine electrical interlock so that the automatic transfer does not take place automatically in such cases as contact fusion welding, breaker handle damage, and circuit fault breaker tripping.

«Электро-Профи» - www.ep.ru

6. Controller

Type and function	Type A (basic type)
Modes of manual and automatic transfer	■
Working position of the main contact (actuator circuit breaker)	
Prime power turned on	■
Standby power turned on	■
OFF	■
Automatic control	
Monitoring the prime power	Failures such as loss of phase/voltage, under and over voltage for any of three phases of the power supply
Monitoring the standby power	Failures such as loss of phase/voltage, under and over voltage for any of three phases of the power supply
Self-throwing and self-reset	■
Self-throwing and not self-reset	■
Power network to power network	■
Power network to power generation	■
No-voltage transfer	■
Under voltage transfer	■
Over voltage transfer	■
Adjustable delay time	■
Transfer delay a	Continuously adjustable in the range of 0s~180s
Return c	Continuously adjustable in the range of 0s~180s
Generator control	■
Fire control linkage (inactive contact)	■
Indication	
Indication for on, off, and double-break	■
Prime power indication	■ (Displaying voltage magnitude)
Standby power indication	■ (Displaying voltage magnitude)
Fault tripping indication	■
External indication signal terminal	■
Parameter setting indication	■
Interlock protection	
Mechanical interlock	■
Electrical interlock	■ (not transfer automatically with faulty tripping)

6.1 The Type A integrated controller works in the modes of integrated or separated configurations, and is installed in the cabinet or on the panel to allow operation outside the cabinet.
Whether to transfer from one power source to another depends on the state of the operational power supply.
Generating set control
Press-key manually forced transfer operating

6.2 Control voltage
AC230V 50Hz

6.3 Operation: automatic operation, manual operation

6.4 Setting delay
Transfer delay: adjustable in the range of 0s - 180s, prime power failure, time before off for QN;
Return delay: continuously adjustable within the range of 0s - 180s, prime power recovery, time before off for QR.

J

«Электро-Профи» - www.ep.ru

6.5 Interface for display and operation

LED digital display

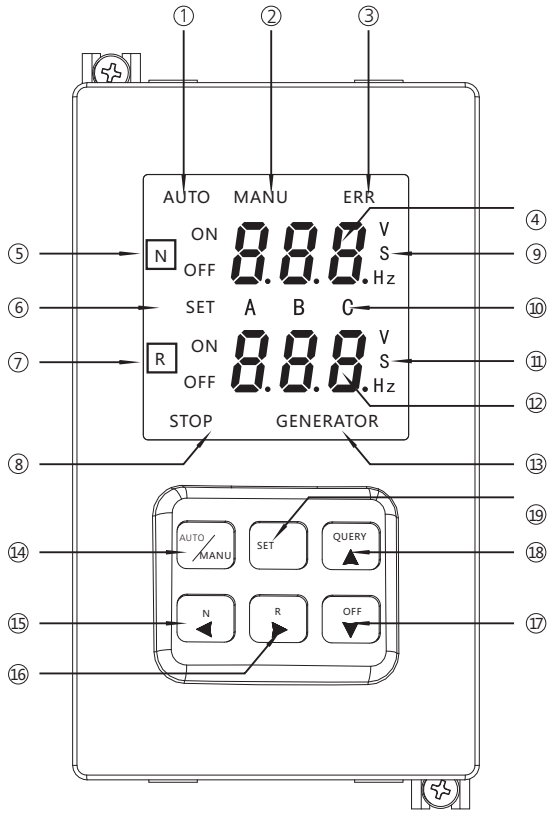

1. Indication of automatic working mode;
2. Indication of manual working mode;
3. Failure indication
   When the breaker is disengaged due to the failure or short-circuit of the switch, this lamp will be on;
4. Display area of normal power voltage parameters
   It displays normal power voltage parameters and changeover delay time under the working condition, and setting items under the setting condition;
5. Indication of the on or off of breaker on the normal power side
6. Indication of setting condition
7. Indication of the on or off of breaker on the alternative power side
8. Indication of the start of stop function;
9. Units of voltage, time, and frequency of the normal power;
10. Phases A, B, and C;
11. Units of voltage, time, and frequency of the alternative power;
12. Display area of alternative power voltage parameters;
    It displays alternative power voltage parameters and transfer delay time under the working condition, and setting items under the setting condition;
13. Indication of the start signal of generator
14. Selection button of automatic/manual transfer
    When it is regularly used, it can be used for selecting the automatic or manual mode; it saves and exits the functions when it is under the setting condition.
15. Button for compulsorily turn off the normal power
    Under the manual control mode, if this button is pressed, it can compulsorily switch to the normal power; if it is setting condition, this button is the "scroll up" button of setting programs;
16. Button for compulsorily turn off the alternative power
    Under the manual control mode, if this button is pressed, it can compulsorily switch to the alternative power; if it is setting condition, this button is the "scroll up" button of setting programs;
17. Off button
    Under the manual control mode, if either line of both power lines are normal and this button is pressed, it will switch to the disengagement position; this button is the minus button for setting parameters when it is under setting condition;
18. Failure inquiry button
    When the switch fails and malfunction lamp on the failure screen is on, the detail malfunction code can be inquired if it is pressed; this button is the plus button if it is under the setting condition;
19. Setting button
    When this button is pressed, it may enter into the parameter setting menu of the controller.

«Электро-Профи» - www.ep.ru

6.6 Operation description on parameter setting

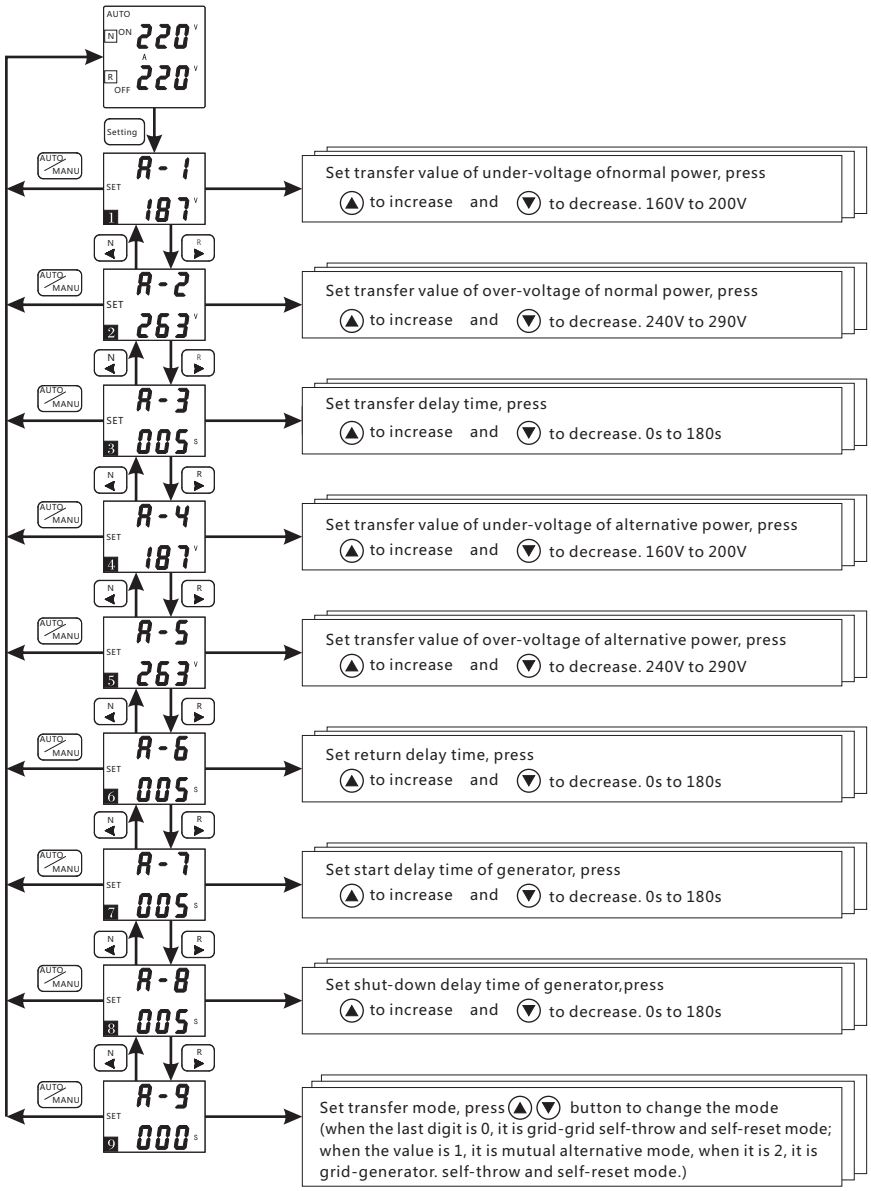

Note for keys

Button Description:

Press the Setting Button when the controller is working, LED will display the parameter setting menu interface displayed in Figure ; press "◀" and "▶" buttons in the setting menu to scroll up the setting options; if the automatic/ manual button is pressed, it will exit the setting menu; press "▼" or "▲" to change parameters.

J

«Электро-Профи» - www.ep.ru

Working processes of typy A controller

Grid – Grid
self-throw and self-reset operation

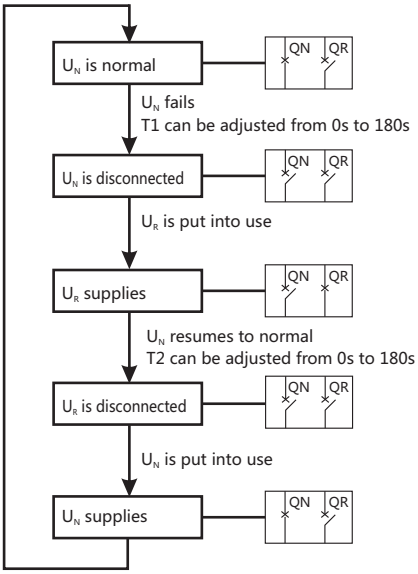

Grid – Grid
mutual alternative operation

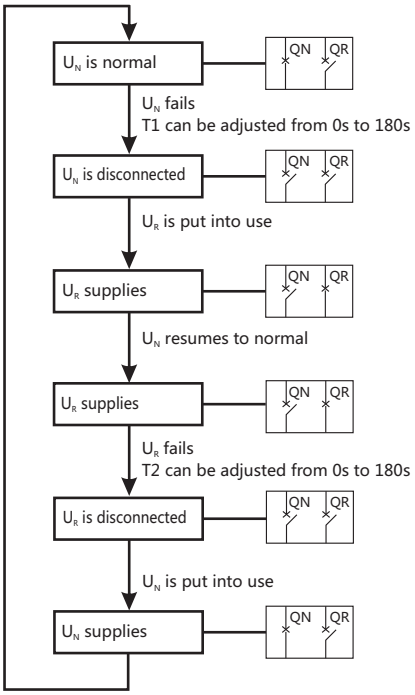

Grid-Power Generation
self-throw and self-reset operation

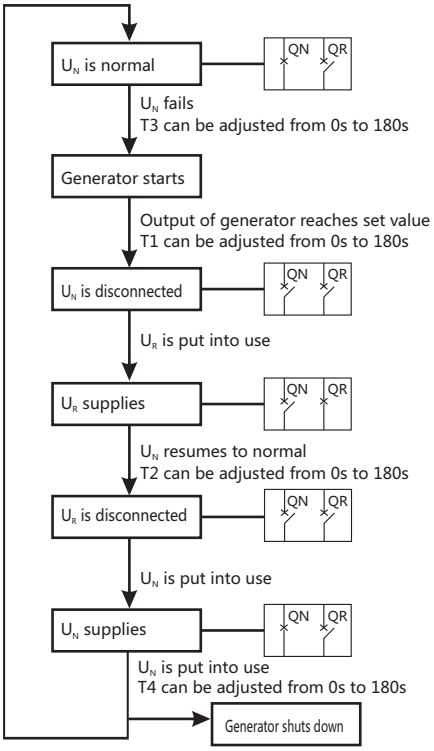

T1: Transfer delay can be adjusted from 0s to 180s
Failure of UN , time before disconnecting QN

T2: Return delay time can be adjusted from 0s to 180s
Normal of UN , time before disconnecting QR

T3: Delay time in starting generator can be adjusted from 0s to 180s

T4: Delay time in shutting-down generator can be adjusted from 0s to 180s
QN: Operating breaker on the frequently used side
QR: Operating breaker on the stand-by side
UN : Normal power supply
UR : Alternative power supply

«Электро-Профи» - www.ep.ru

7. NZ7 external connection diagram

7.1 Product connection diagram

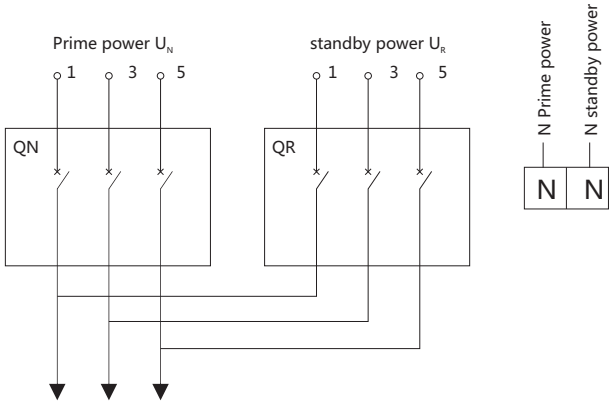

7.2 4P product connection diagram

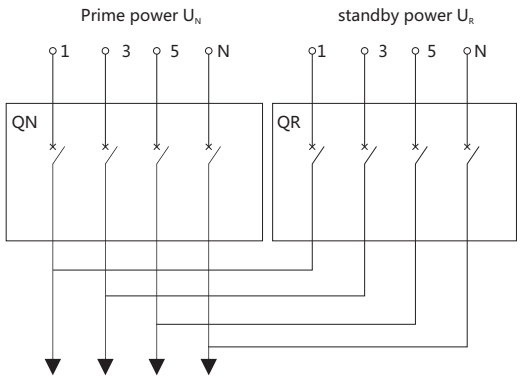

Note: QN actuator circuit breaker on the prime (normal) side
QR actuator circuit breaker on the standby (reserve) side

7.3 Wiring diagram of external terminals of the controller

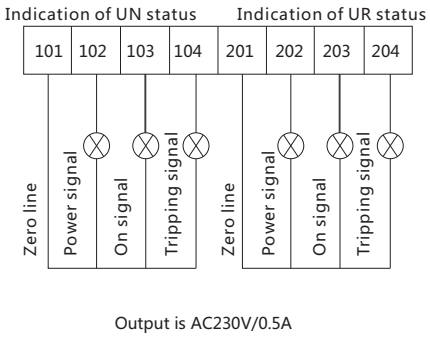

Output is AC230V/0.5A

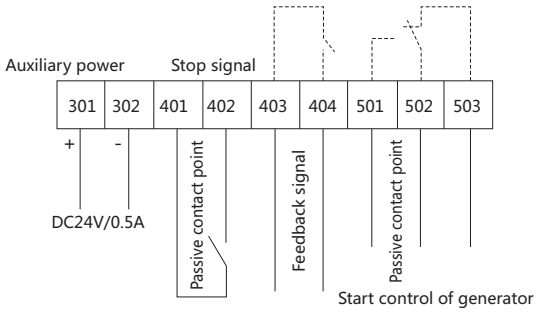

Note: the hidden line is the internal wiring of the controller.

J

«Электро-Профи» - www.ep.ru

7.4 Application

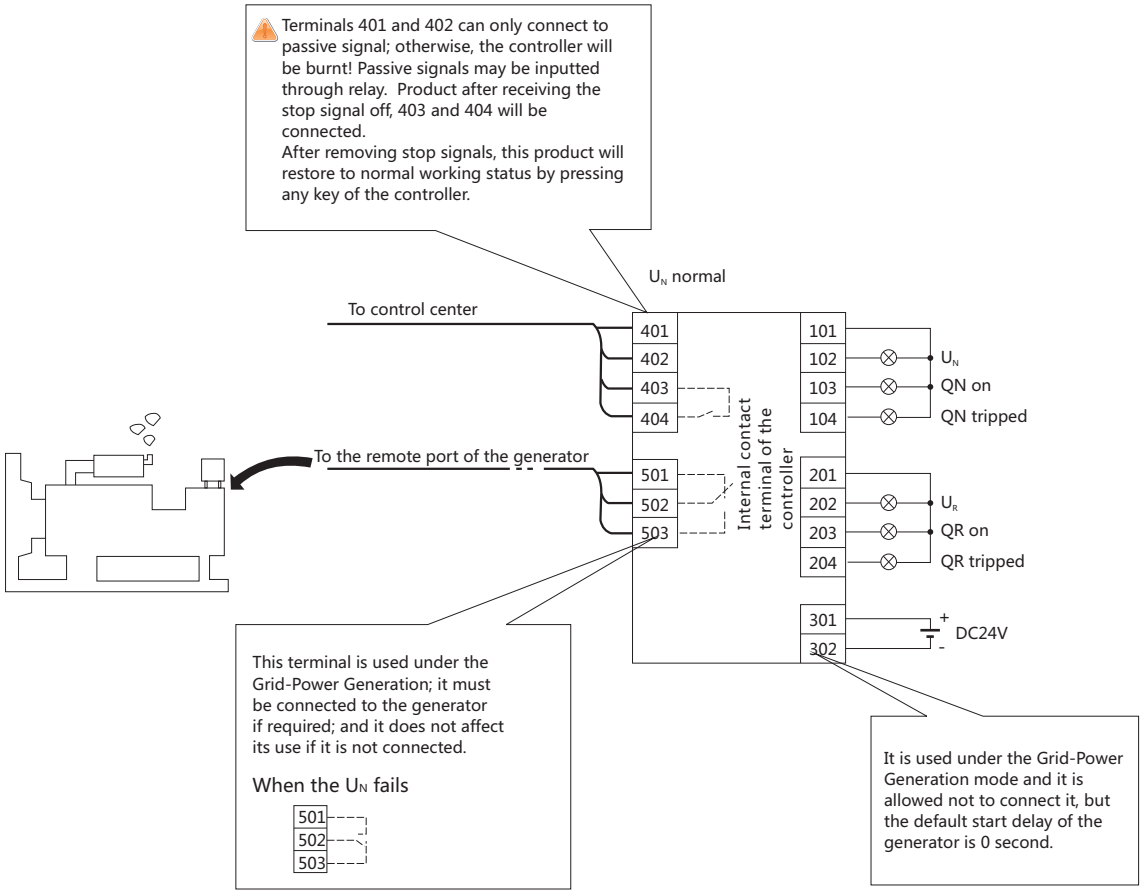

8. Line incoming pattern

8.1 Connecting bus-bar type

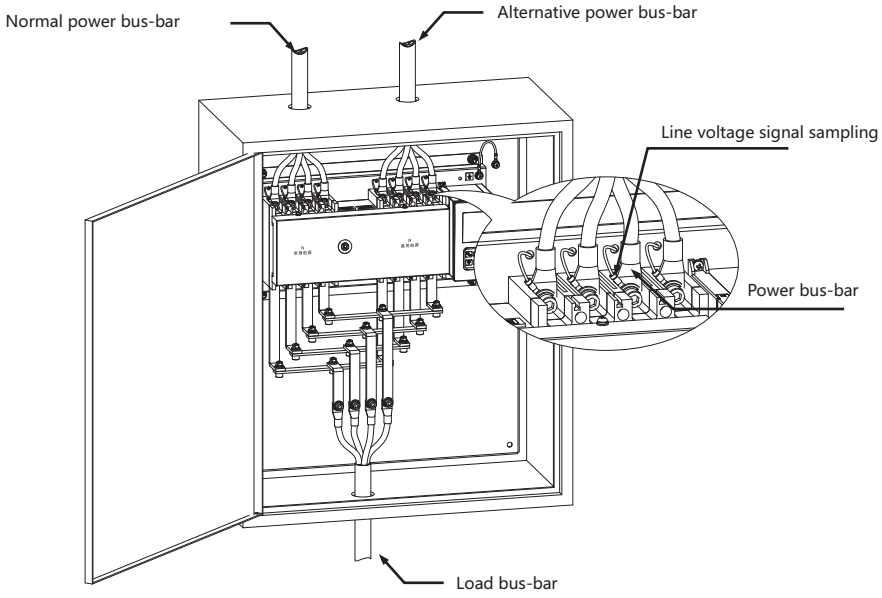

8.2 Installation mode: vertical installation or horizontal installation

«Электро-Профи» - www.ep.ru

9. Overall and mounting dimensions (mm)

9.1 Outline dimension & Installation dimension

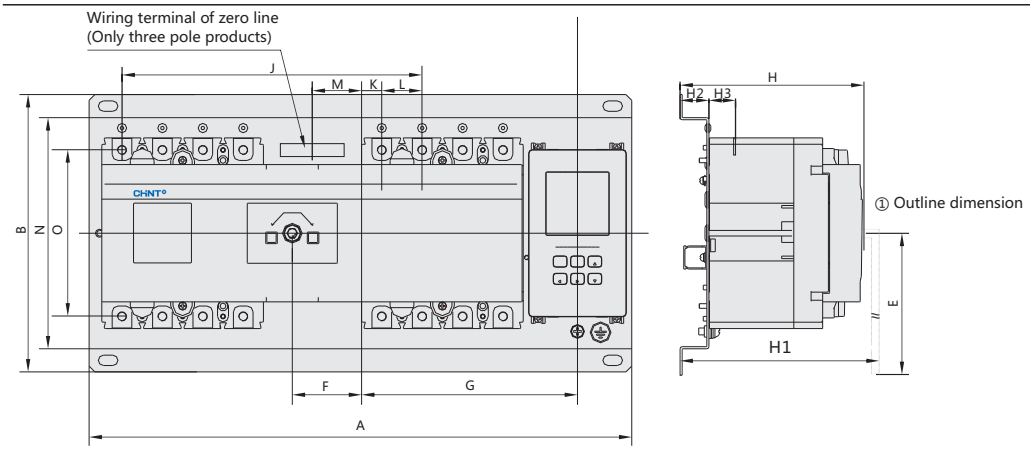

Dimension / Modle	A		B	E	F		G		J	K		L	M	N	O	H	H1	H2	H3
	3P	4P			3P	4P	3P	4P		3P	4P								
NZ7-63	355	380	240	200	40	52.5	132.5	145	178	24	11.5	25	40	200	117	150	170	25	18/28
NZ7-125	390	420	240	200	43	58	148	163	194	24	9	30	43	200	136	150	180	25	24
NZ7-250	435	470	240	200	41.5	59	170.5	188	225	36	18.5	35	41.5	200	144	160	190	25	24
NZ7-400	565	615	330	225	43.5	68.5	232.5	257.5	304	61.5	36.5	48	43.5	265	224	200	227	24	40
NZ7-630	680	740	330	225	45.5	74.5	291	320	385	89	60	58	45.5	270	234	200	232	24	42

9.2 Installation dimension

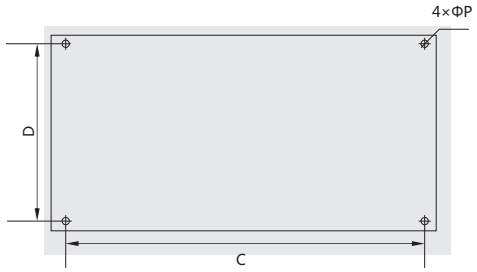

Dimension / Modle	C		D	P
	3P	4P		
NZ7-63	322	347	220	Φ8
NZ7-100	357	387	220	Φ8
NZ7-225	402	437	220	Φ8
NZ7-400	505	555	300	Φ10
NZ7-630	622	680	300	Φ10

J

«Электро-Профи» - www.ep.ru

9.3 Controller Module

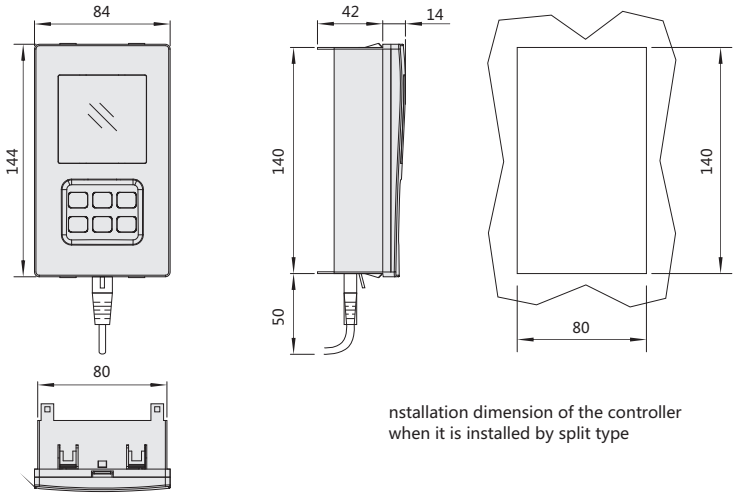

nstallation dimension of the controller
when it is installed by split type

10. Ordering information

The user shall indicate such items as the type, current specification, number of poles.
Example: If you order an auto transfer switch equipment, shell current 100A, rated current 100A, breaking capacity of Type H, 4 poles, Type A controller, you can write it as NZ7-100H/4100YA.

«Электро-Профи» - www.ep.ru



HH15/QAS/QPS/QSS Changeover Switch

1. General

1.1 Application

Mainly used in the distributing and motor circuit which has high short-circuit current, and acted as main switch or master switch infrequently operated by hand, it is particularly suitable in the relative high class with drawable low voltage complete equipment.

They provide safety isolation and protection against overcurrent for any low voltage electrical circuit.

1.2 Standard: IEC/EN 60947-3.

1.3 General characteristic

Full-enclosed structure

Unique rolling insert type contact system.

2. Type designation

2.1 Ordering information

HH15 -□/□ □ □S

- Changeover switch
  - QA: No fuse, with series connection contacts
  - QP: No fuse, with parallel connection contacts
  - QS: Switch-disconnector fuse (associated with fuse)
- No. of auxiliary contacts
  - 0: no auxiliary contact
  - 1: 1 pair of auxiliary contact
  - 2: 2 pairs of auxiliary contact
- No. of poles
  - 2: 2 poles
  - 3: 3 poles
  - 4: 4 poles
- Rated operating current
- Series No.

Note: This switch may only be operated outside the cabinet. QSS series switch should be used with RT36 (NT,RT16) or Rt20 series fuses provided by the user.

J

«Электро-Профи» - www.ep.ru

2.2 Technical data

HH15/QAS

Specification		125	160	200	400	630	1000
No. of poles		3	3	3	3	3	3
Rated insulating voltage(V)		Ue=400V, Ui=690V. Ue=690V, Ui=1000V					
Rated operating voltage Ue(V)		AC400	AC400	AC400	AC400	AC400	AC400
		AC690	AC690	AC690	AC690	AC690	AC690
Conventional thermal current(A)		125	160	200	400	630	1000
Rated operating current(A)	400V: AC-21B	125	160	200	400	630	1000
	400V: AC-22B	125	160	160	315	400	630
	690V: AC-23B	125	160	160	400	400	800
Rated Short-circuit making capacity (Peak)(kA)		20	20	20	50	50	50
Rated Short-time withstand cuuent(kA)		1.5	1.6	2.4	4.8	8	12
Mechanical life		1400	1400	1400	800	800	500
Electric Life		200	200	200	200	200	100
Operating torque (N·m)		7.5	16	16	16	30	40
Conventional thermal current of auxiliary contact Ith 400, AC-15(A)		5	5	5	5	5	5

HH15/QPS

Specification		250	630	1000	1250	1600	2500	3150
No. of poles		3	3	3	3	3	3	3
Rated insulating voltage(V)		Ue=400V,Ui=690V.Ue=690V,Ui=1000V						
Rated operating voltage Ue(V)		AC400	AC400	AC400	AC400	AC400	AC400	AC400
		AC690	AC690	AC690	AC690	AC690	AC690	AC690
Conventional thermal current(A)		250	630	1000	1250	1600	2500	3150
Rated operating current(A)	400V:AC-21B	250	630	1000	1250	1600	2500	3150
	400V:AC-22B	250	630	630	630	800	-	-
	690V:AC-21B	250	630	1000	1250	1470	2500	2500
Rated Short-circuit making capacity (Peak)(kA)		39	60	60	85	85	130	130
Rated Short-time withstand cuuent(kA)		3	8	12	15	20	30	38
Mechanical life		1400	800	500	500	500	500	300
Electric Life		200	200	100	100	100	100	100
Operating torque (N·m)		16	30	40	45	60	75	90
Conventional thermal current of auxiliary contact Ith 400, AC-15(A)		5	5	5	5	5	5	5

HH15/QSS

Specification		HH15-63	HH15-125	HH15-160	HH15-250	HH15-400	HH15-630
No. of poles		3	3	3	3	3	3
Rated insulating voltage Ui(V)		Ue=400V,Ui=690V.Ue=690V,Ui=1000V					
Rated operating voltage Ue(V)		AC400	AC400	AC400	AC400	AC400	AC400
		AC690	AC690	AC690	AC690	AC690	AC690
Conventional thermal current(A)		63	125	160	250	400	630
Rated operating current(A)	400V:AC-23B	63	125	160	250	400	630
	690V:AC-23B	63	100	160	250	315	425
Rated Limiting Short-circuit current 400:V/H(kA)		50/100	50/100	50/100	50/100	50/100	50/100
Rated Limiting Short-circuit current when 690V(kA)		50	50	50	50	50	50
Mechanical life		1700	1400	1400	1400	800	800

«Электро-Профи» - www.ep.ru

Specification		HH15-63	HH15-125	HH15-160	HH15-250	HH15-400	HH15-630
Electric Life		300	200	200	200	200	200
Rated current of fuse 400V/690V(A)		63/63	125/100	160/160	250/250	400/315	630/425
Model of fuse	400V	RT16	RT16	RT16	RT16	RT16	RT16
		RT20	RT20	RT20	RT20	RT20	RT20
		NT00	NT00	NT00	NT2	NT2	NT3
	690V	RT16	RT16	RT16	RT16		RT16
		NT00	NT00	NT1	NT2		NT3
Operating torque (N·m)		7.5	7.5	16	16	16	30
Conventional thermal current of auxiliary contact Ith 400, AC-15(A)		5	5	5	5	5	5

2.3 Mounting dimension(mm)

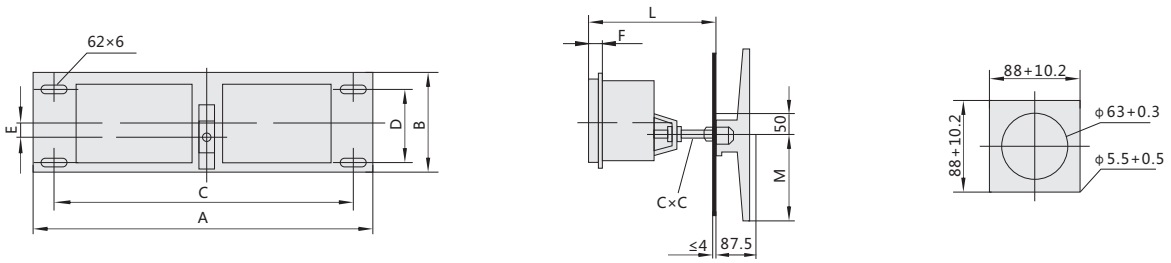

Model	A	B	C	D	E	F	G	L	M
HH15-63/QSS	430	170	386	120	14	25	10	300	140
HH15-125/QSS	430	170	386	120	14	25	10	300?	140
HH15-125/QAS	430	170	386	120	14	25	10	300	140
HH15-160/QAS	430	170	386	120	14	25	10	300	140
HH15-250/QPS	430	170	386	120	14	25	10	300	140
HH15-160/QSS	630	190	590	120	25	25	12	300	200
HH15-250/QSS	630	190	590	120	25	25?	12	300	200
HH15-400/QSS	630	190	590	120	25	25	12?	300	200
HH15-400/QAS	630	190	590	120	25	25	12	300	200
HH15-630/QAS	630	190	590	120	25	25	12	300	200
HH15-630/QPS	630	190	590	120	25	25	12	300	200
HH15-1000/QPS	630	190	590	120	25	25	12	300	200
HH15-630/QSS	950	250	906	180	28	28	12	400	200
HH15-1000/QAS	950	250	906	180	28	28	12	400	200
HH15-1250/QPS	950	250	906	180	28?	28	12	400	200
HH15-1600/QPS	950	250	906?	180	28	28	12	400	200
HH15-2500/QPS	950	250	906	180	28	28	12	400	400
HH15-3150/QPS	950	250	906	180	28	28	12	400	400

J

«Электро-Профи» - www.ep.ru



NH40S Changeover Switch

1. General

1.1 Application

Mainly used in the distributing and motor circuit which has high short-circuit current, and acted as main switch or master switch infrequently operated by hand, it is particularly suitable in the relative high class with drawable low voltage complete equipment. They provide safety isolation and protection against overcurrent for any low voltage electrical circuit.

1.2 Standard: IEC/EN 60947-3.

1.3 General characteristic

Full-enclosed structure

Unique rolling insert type contact system.

2. Type designation

2.1 Ordering information

NH40 - □/□ C S □□

With "F" : terminal protection type (only for 125~250A)
Without "F" : without terminal protection

With "W" : the handle is operated outside the cabinet
Without "W" : the handle is operated inside the cabinet

S: Changeover switch

C: lateral operation
Blank: front operation

3 represents three poles: 31 represents three poles with auxiliary, one open and one closed
32 represents three poles with auxiliary, two open and two closed
4 represents four poles: 41 represents four poles with auxiliary, one open and one closed
42 represents four poles with auxiliary, two open and two closed

Conventional thermal current

Series No.

«Электро-Профи» - www.ep.ru

2.2 Technical data

Conventional thermal current		16	32	40	63	80	100	125	160	200	250	315	400	630
Associated fuse rating (A)		16	32	40	63	80	100	125	160	200	250	315	400	630
Rated insulation voltage(V) Ui		800												
Rated current (A)	400V AC21B	16	32	40	63	80	100	125	160	200	250	315	400	630
	400V AC22B	-	-	-	-	-	-	125	125	200	250	315	400	630
	400V AC23A	-	-	-	-	-	-	125	160	200	250	315	400	630
	690V AC21B	16	32	40	63	63	63	125	160	200	250	315	400	500
	690V AC22B	-	-	-	-	-	-	100	100	160	160	200	250	315
	690V AC23A	-	-	-	-	-	-	50	63	70	80	125	160	200
Operation force (N)		30~50						40~60				65~100		

Conventional thermal current		1000	1250	1600	2000	2500	3150
Associated fuse rating (A)		1000	1250	2×800	2×1000	2×1250	
Rated insulation voltage(V) Ui		800					
Rated current (A)	400V AC21B	1000	1250	1600	2000	2500	3150
	400V AC22B	1000	1250	1600	2000	2500	3150
	690V AC21B	800	800	1000	1600	1600	2000
	690V AC22B	800	800	800	1000	1000	1250
Operation force (N)		200~300					

Mounting dimensions of NH40-16~1600/C and NH40-16~1600/CS

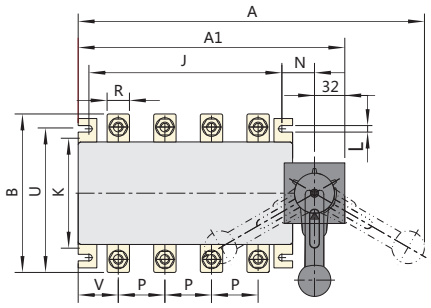

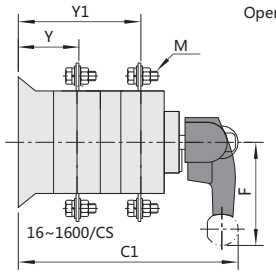

Operation inside the switchger

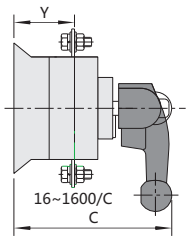

Panel of switchgear cubicle

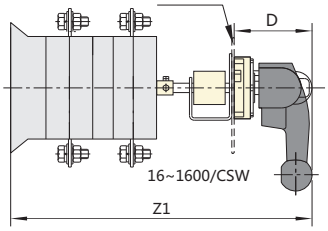

Panel of switchgear cubicle

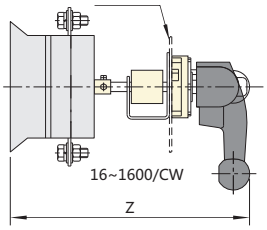

Operation outside the switchger

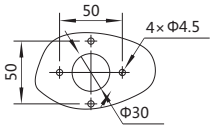

Mounting dimension of externally mounted handle

J

«Электро-Профи» - www.ep.ru

Mounting dimension of NH40 lateral operation and NH40 changeover switch disconnector

Specification	**NH40-XX/C NH40-XX/CS Overall and mounting dimensions (mm)**																			
Current	A	A1	B	C	C1	D	F	J	K	L	N	P	R	U	V	M	Y	Y1	Z	Z1
16~100A/3	290	170	107	135	185	85	135	116	84	7	25	30	14	90	20	6	39	90	360~465	440~545
16~100A/4	290	170	107	135	185	85	135	116	84	7	25	30	14	90	20	6	39	90	360~465	440~545
125A/3	295	192	135	155	235	85	135	120	95	7	29.5	36	18	115	31	8	58	122	410~515	480~595
160A/3	295	192	135	155	235	85	135	120	95	7	29.5	36	20	115	29	8	58	122	410~515	480~595
125A/4	325	222	135	155	235	85	135	150	95	7	29.5	36	18	115	31	8	58	122	410~515	480~595
160A/4	325	222	135	155	235	85	135	150	95	7	29.5	36	20	115	29	8	58	122	410~515	480~595
200A/3	335	232	170	176	260	85	135	160	115	7	29.5	50	25	142	37	10	67	148	430~535	510~615
250A/3	335	232	170	176	260	85	135	160	115	7	29.5	50	25	142	37	10	67	148	430~535	510~615
200A/4	385	282	170	176	260	85	135	210	115	7	29.5	50	25	142	37	10	67	148	430~535	510~615
250A/4	385	282	170	176	260	85	135	210	115	7	29.5	50	25	142	37	10	67	148	430~535	510~615
315A/3	430	298	240	233	335	105	160	210	180	9	43	65	32	205	48	12	84	196	515~630	620~735
400A/3	430	298	240	233	335	105	160	210	180	9	43	65	35	205	48	12	84	196	515~630	620~735
630A/3	430	298	260	233	335	105	160	210	180	9	43	65	40	220	48	12	84	196	515~630	620~735
315A/4	490	358	240	233	335	105	160	270	180	9	43	65	32	205	48	12	84	196	515~630	620~735
400A/4	490	358	240	233	335	105	160	270	180	9	43	65	35	205	48	12	84	196	515~630	620~735
630A/4	490	358	260	233	335	105	160	270	180	9	43	65	40	220	48	12	84	196	515~630	620~735
1000A/3	580	472	316	280	424	105	165	353	220	11	50	120	60	240	78	12	108	253	605~720	750~865
1250A/3	580	472	356	280	424	105	165	353	220	11	50	120	70	246	78	12	108	253	605~720	750~865
1600A/3	580	472	356	280	424	105	165	353	220	11	50	120	80	246	78	12	108	253	605~720	750~865
1000A/4	700	592	316	280	424	105	165	473	220	11	50	120	60	240	78	12	108	253	605~720	750~865
1250A/4	700	592	356	280	424	105	165	473	220	11	50	120	70	246	78	12	108	253	605~720	750~865
1600A/4	700	592	356	280	424	105	165	473	220	11	50	120	80	246	78	12	108	253	605~720	750~865

«Электро-Профи» - www.ep.ru

Mounting dimensions of NH40-2000~3150/C and NH40-2000~3150/CS

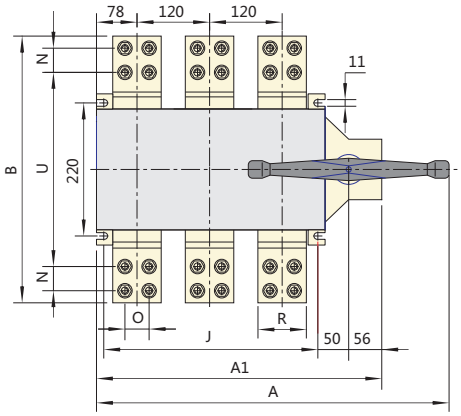

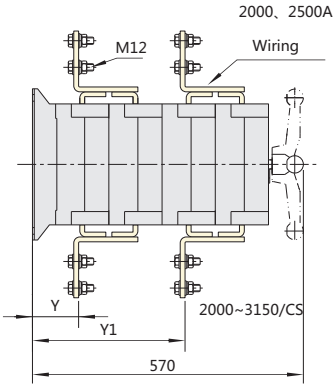

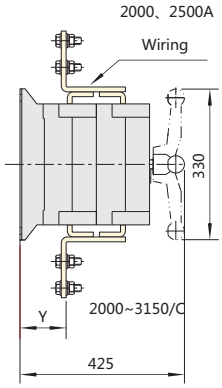

Operation inside the switchger

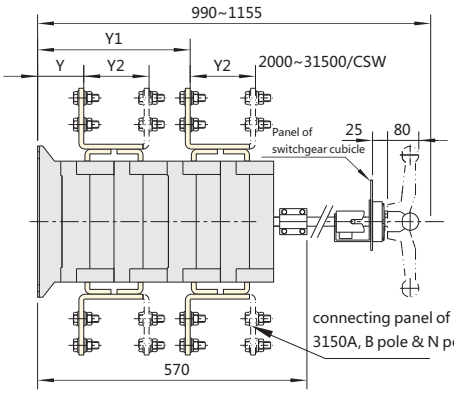

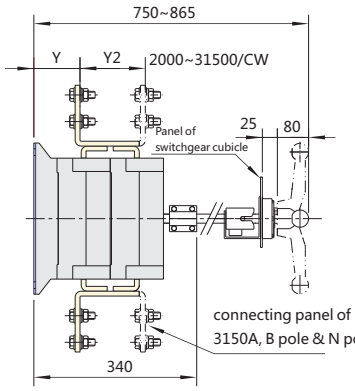

Operation outside the switchger

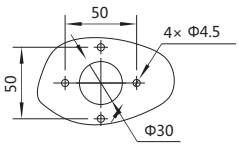

Mounting dimension of externally mounted handle

Mounting dimension of NH40 changeover switch disconnect

Specification	NH40-XX/C NH40-XX/CS Overall and mounting dimensions (mm)										
Current	A	A1	B	R	J	U	O	N	Y	Y1	Y2
2000A/3	580	472	440	80	353	325	40	40	105	335	-
2500A/3	580	472	440	80	353	325	40	40	105	335	-
3150A/3	580	472	510	120	353	360	50	50	105	335	105
2000A/4	700	592	440	80	473	325	40	40	105	335	-
2500A/4	700	592	440	80	473	325	40	40	105	335	-
3150A/4	700	592	510	120	473	360	50	50	105	335	105

J

«Электро-Профи» - www.ep.ru



NH40SZ
Automatic Changeover Switch

1. General

NH40SZ automatic changeover switch disconnector integrates electrical and mechanical interlocking systems to guarantee safe transfer operation.
It is applicable for the three-phase four-wire power supply system of AC 50Hz, rated voltage AC 380V ,rated current up to 3150A.

It can realize automatic and manual changeover between normal and back up power supply power, and stop power supplying to load when changeover process of power supply is carried out.

The switch is applicable for two circuits power supply and in the condition which requires high quality power supply.

Standard: IEC 60947-6-1

2. Type designation

N H 40 - □/□ SZ L □ X F □ H

- H: With box
- F: Y:Liquid crystal display
- X: Split type
- Fire function
- Without any words means normal type, automatic change and recovery
  A means normal type, automatic change but not automatic recovery
- L: Ⅰ: Mains supply-mains supply, mutual standby, phase loss protection; overvoltageand undervoltage protection;
  Ⅱ: Mains supply-mains supply, automatic change and automatic recovery, phase loss protection, overvoltage and undervoltage protection;
  Ⅲ: Mains supply-oil engine, automatic change and automatic recovery, phase loss protection, overvoltage and undervoltage protection;
- The terminal is 2 input and 1output wiring
- SZ: Dual-power supply automatic transfer
- "3" represents three poles
  "4" represents four poles
- Rated operational current
- Design sequence No.
- Isolating switch
- Company code

3. Technical data

Conventional thermal current (A)		16	32	40	63	80	100	125	160	200	250	315	400	630	800	1000	1250	1600	2000	2500	3150
Ie (A)		16	32	40	63	80	100	125	160	200	250	315	400	630	800	1000	1250	1600	2000	2500	3150
Ui(V)		660														800					
Uimp(V)		8														12					
Ue, Us		Ue=400V; Us=220V																			
Rated making and breaking capacity		6Ie																			
Icw (KA)		5						10				12.6				50			50		
Converting time (S)		≤3s														≤4s					
Rated controlling capacity (W)	Startup	300						325				355				400			600		
	Natural	55						62				74				98			120		
Operation force (N)		30~50						40~60		65~100		75~120				200~300			250~400		

«Электро-Профи» - www.ep.ru

4. Control characteristics and product structure

4.1 Control characteristics:

There are two types of switch products, three-pole and four-pole (three poles + switchable neutral pole).

Four control types (common type, Ⅰ, Ⅱ,Ⅲ),usually it is common type.

Control characteristics of common type switch:

a. This switch applies to the automatic change and automatic recovery of main power supply-standby power supply (including manual oil generator; Note: Manual oil generator does not have to be used with type Ⅲ switches) systems. Power supply I precedes. When power supply I is normal, it is switched on; when power supply I fails and power supply Ⅱ is normal, the switch changes to power supply Ⅱ; when power supply I resumes, the switch automatically changes to power supply I.

Control characteristics of type I switch:

a. This switch applies to the mutual standby of mains supply systems. When the switch is in the "0" position, power supply I precedes. When power supply I fails and power supply Ⅱ is normal, the switch changes to power supply Ⅱ; when power supply Ⅱ is on and power supply I resumes, the switch does not automatically change to power supply I, it will change to power supply I only when power supply Ⅱ fails. The main power supply changes to the standby power supply (the delay continuously adjustable between 1～999s), the standby power supply changes to the main power supply (the delay continuously adjustble between 1～999s).

b. Phase loss detection protection function, overvoltage、 undervoltage protection fuctions.

4.2 Product structure

Control characteristics of type Ⅱ switch:

a. This switch applies to the automatic change and automatic recovery of mains supply-mains supply systems. Power supply I precedes. When power supply I is normal, it is switched on; when power supply I fails and power supply Ⅱ is normal, the switch changes to power supply Ⅱ; when power supply I resumes, the switch automatically changes to power supply I. The main power supply changes to the standby power supply (the delay continuously adjustable between 1～999s), the standby power supply changes to the main power supply (the delay continuously adjustable between 1～999s).

b. Three-phase overvoltage, undervoltage and phase loss detection protection functions.

Control characteristics of type Ⅲ switch:

a. This switch applies to the mutual standby or automatic change and automatic recovery of mains supply-oil generator (automatic oil generator with signals) systems. Power supply I (the mains supply) precedes. When power supply I fails, the switch gives a signal to start the oil generator. The oil generator has warm-up delay (continuously adjustable between 0～180s) function. After the oil generator has started, the switch changes to power supply Ⅱ (the oil generator). When power supply I resumes, the switch automatically changes to power supply I, the oil generator automatically stops after a cooling delay (continuously adjustable between 0～180s).

b. Three-phase overvoltage and undervoltage protection functions for mains supply and oil generator.

Type I, type Ⅱ and type Ⅲ switches have:

1) Automatic, remote and manual control functions
2) A 0.5s delay of the detection signal, to prevent misoperation.
3) A remote control "0" position in automatic state.
4) A key switch for the selection of operation mode.

J

«Электро-Профи» - www.ep.ru

16A-100A/4(Common type)

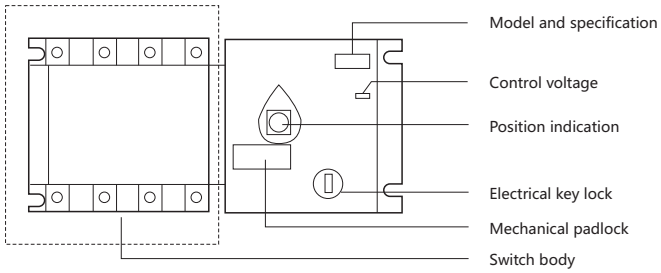

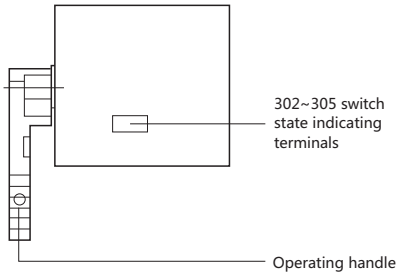

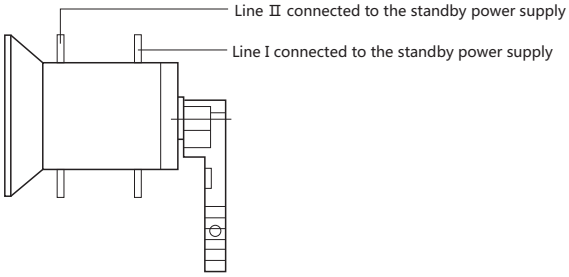

100A/3 common type; 100A/3, 4 type Ⅰ, type Ⅱ, type Ⅲ; 125A-3200A/3, 4 common type, type Ⅰ, type Ⅱ, type Ⅲ

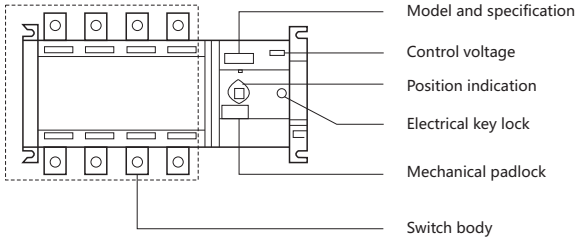

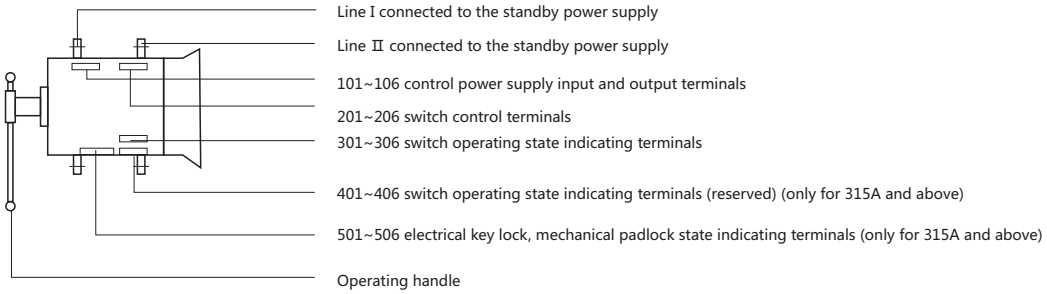

«Электро-Профи» - www.ep.ru

a. Electrical key lock: It controls the power supply of the internal control circuit of the switch. When the electrical lock is in the "Automatic" position, the switch can be operated automatically or remotely. When the electrical lock is in the "Manual" position, the switch can only be operated manually;

b. Operating handle: When operating the switch with the operating handle, the elctrical lock must be in the "Manual" position;

c. Mechanical padlock: Before maintenance, put the switch to the 0 position with the operating handle, pull up the padlock structure and lock the padlock. (Pulling up the mechanical padlock switches off the internal control power supply of the switch so that it cannot be operated electrically or manually);

d. Position indication: It indicates the operating position (Ⅰ; 0; Ⅱ) of the switch;

e. Control voltage: The control voltage class of the switch is 220VAC;

f. Switch body: The front part is line Ⅰ, which is connected to the "Normal power supply"; the rear part is line Ⅱ, which is connected to the "Standby power supply".

4.3 Connection terminal of control circuit

Common type

Connection terminal 1	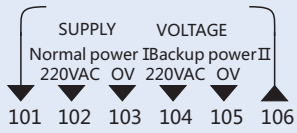	Connection terminal 2	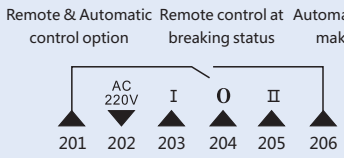
Connection terminal 3	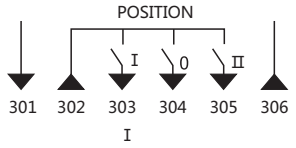	Connection terminal 3	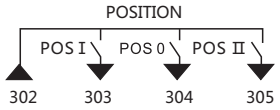 (16A~100A common type only)
Connection terminal 4	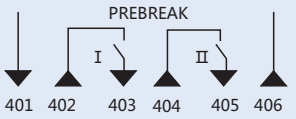	Connection terminal 5	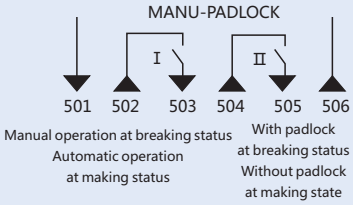

Type Ⅰ and type Ⅱ

Connection terminal 1	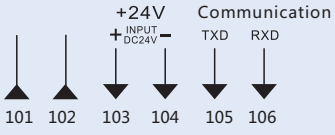	Connection terminal 2	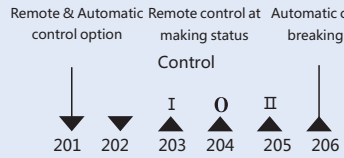
Connection terminal 3	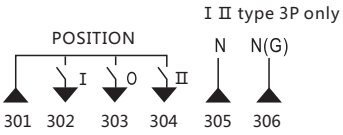	Connection terminal 4	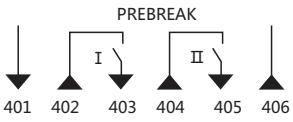
Connection terminal 5	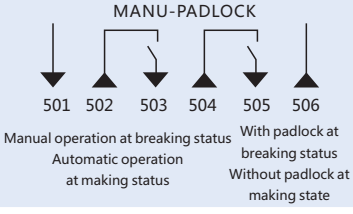		

«Электро-Профи» - www.ep.ru

Type Ⅲ

Connection terminal 1	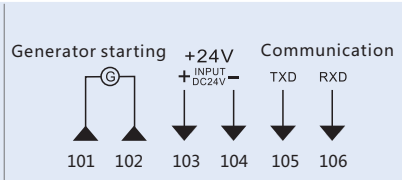	Connection terminal 2	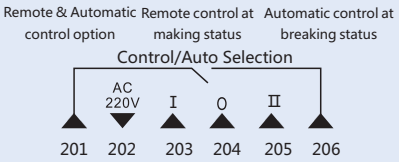
Connection terminal 3	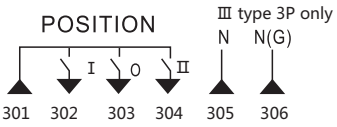	Connection terminal 4	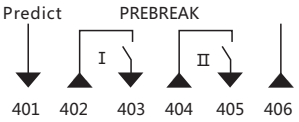
Connection terminal 5	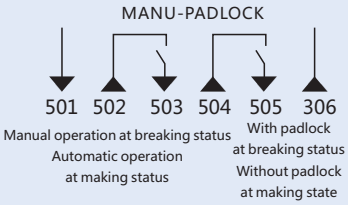		

Terminal 1, main options
101, 106-Note: They do not connect with other terminal (only for common type)
102, 103-Power control terminal of circuit Ⅰ(only for common type)
104, 105-Power control terminal of circuit Ⅱ(only for common type)
101, 102-Generator starting signal input (for type Ⅲ)
103, 104-Firefighting +24V input, enforce "0", both switches breaks (for type Ⅰ, Ⅱ, Ⅲ)
105, 106-Communication Interface (Reserved)

Terminal 2, remote control
201, 206-Terminal of remote controlling, automatic controlling functions. Remote control at breaking status and automatic control at making status.
202, 203-Making switch Ⅰ.
202, 204-At "0" position, both switches breaks (for type Ⅰ, Ⅱ, Ⅲ) (include preferring position "0")
202, 205-Making switch Ⅱ.

Terminal 3, position indication and zero-line terminal
301, 302-Switch Ⅰ position
301, 303-At "0" position, all swithes breaks
301, 304-Switch Ⅱ position.
305-Type Ⅰ, Ⅱ, switch Ⅰ controls zero-line "N1";
type Ⅲ switch Ⅰ controls zero-line "N" (only for 3 poles)

Terminal 4, pre-breaking auxiliary contact
306-Type Ⅰ, Ⅱ, switch Ⅱ controls zero-line "N2"; type Ⅲ, switch Ⅱ controls zero-line "N(G)"
402, 403, Pre-breaking position of indication switch Ⅰ.
404, 405, Pre-breaking position of indication switchⅡ.

Terminal 5 Manual and automatic operation mode and whether locking the switch
502, 503, Automatic and manual control indication
504, 505, Indcation of whether locking the switch Terminal 6 Start-up terminals
for diesel generator
501,506: They are supuerfluity.

«Электро-Профи» - www.ep.ru

5. Connection diagram

5.1 16A~100A 4 poles main switch wiring diagram

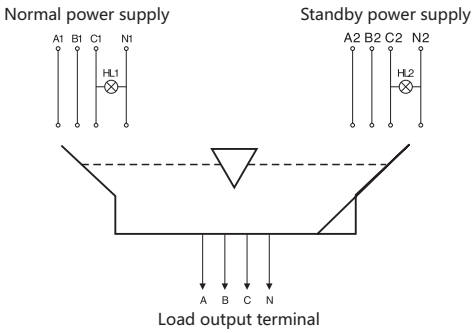

(Special attention should be paid to the sequence of connection.)

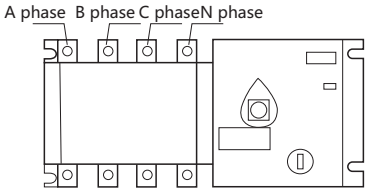

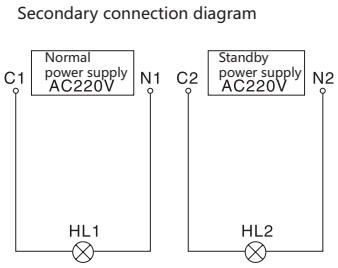

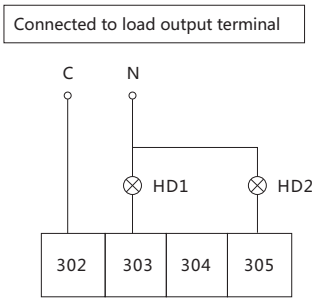

HL1 and HL2 are respectively the resumption indicators of the normal and standby power supplies;

HD1 and HD2 are respectively the service indicators of the normal and standby power supplies;

302~305 are switch terminals.

5.2 125A~3150A main switch wiring diagram

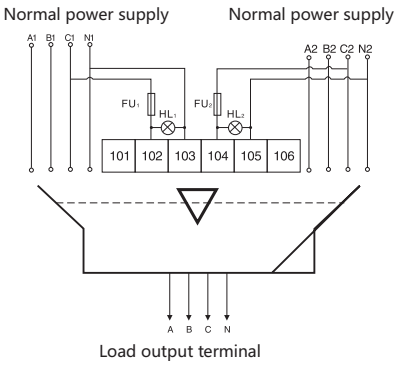

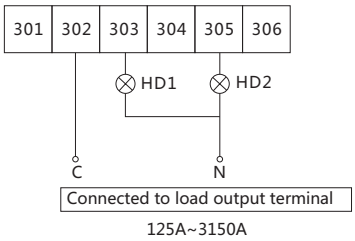

Note: Secondary connection of terminal 1 is required (for 16A~100A with forced reset, the connection mode is the same as above).

5.3 125A~3150A Secondary wiring diagram (3P, 4P)

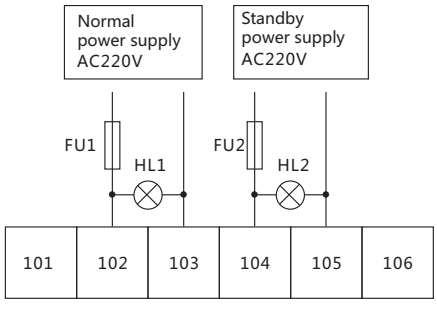

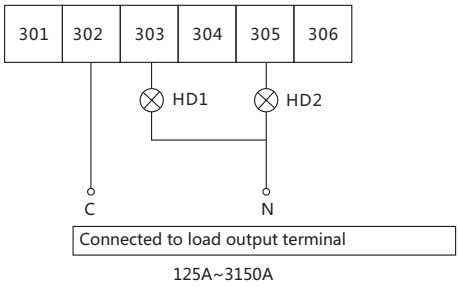

HL1 and HL2 are respectively the resumption indicators of the normal and standby power supplies;
HD1 and HD2 are respectively the service indicators of the normal and standby power supplies;
FU1 and FU2 are 5A fuses;
101~106, 201~206, 301~306 are switch terminals.

5.4 Depending on the operating mode, the following connection modes can be used for terminal 2:

a. Fully automatic connection mode

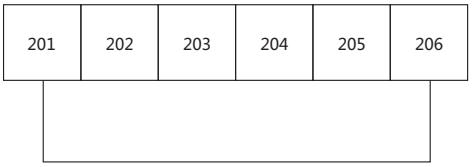

201 and 206 short connected (Normal Type)

Note: Secondary connection of terminal 1 is required.

b. Remote reset (the two power supplies are disconnected) connection mode

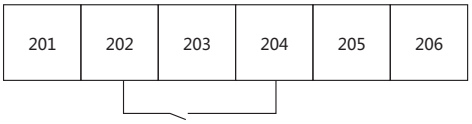

Forced reset contact (passive)

c. Remote connection mode (Note: SB1 and SB2 are external push-button switches)

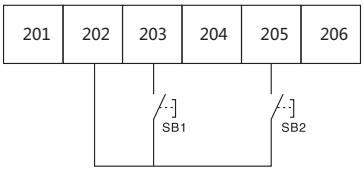

d. Fully automatic + manual (remote) connection mode (Note: SB1 and SB2 are external push-button switches)

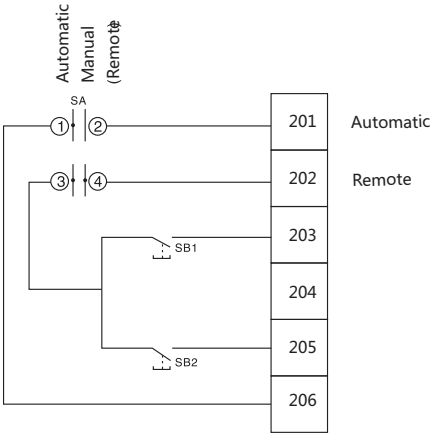

Normal Mode
Note: When switch SA is in the automatic position,① and ②
are connected.
When switch SA is in the manual position, ④ and ③
are connected, but the switch SA must break.

«Электро-Профи» - www.ep.ru

5. Connection diagram

5.5 Connection diagram

NH40-16~100

16~100A 3P connection chart

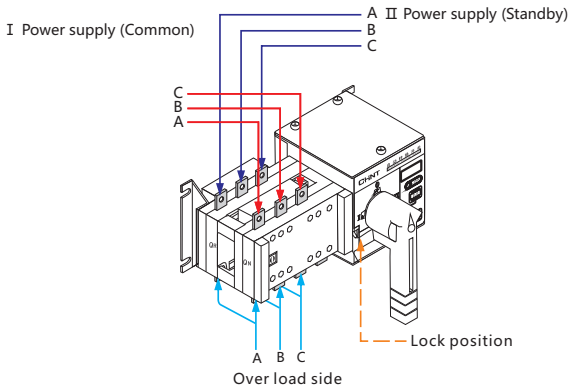

16~100A 3P connection chart

16~100A 4P connection chart

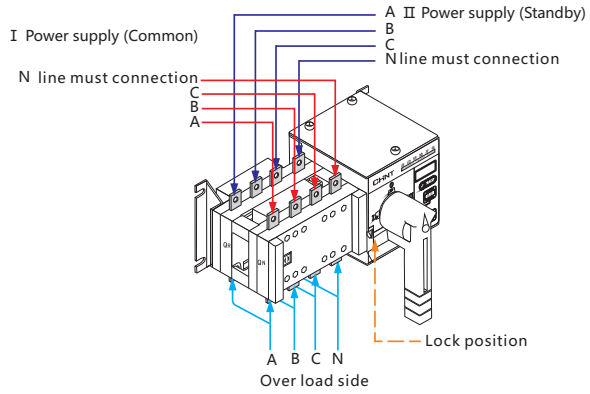

16~100A 4P connection chart

Correct mounting of the switch:

a. Copper busbars I and II are respectively connected to phases R, S, T, N of the normal (front) and standby (rear) power supplies from left to right.

b. The control power supplies are obtained respectively from phases T and N of the normal and standby power supplies.

c. AC220V control power supplies I and II are respectively connected to terminals 102~103 and 104~105, among which 102 and 104 are respectively the live wires of the normal and standby power supplies.

d. Terminals 1.1 and 106 are only used as the control power supplies of the signal lamps. Note: They should not be connected to any other lines.

e. When upper (lower) incoming line is used, phases R, S, T, N of the lower (upper) lines I and II are respectively connected with copper busbars or conductors as the output.

J

«Электро-Профи» - www.ep.ru

6. Mounting dimension of NH40SZ automatic changeover switch disconnector

16 ~ 1600A

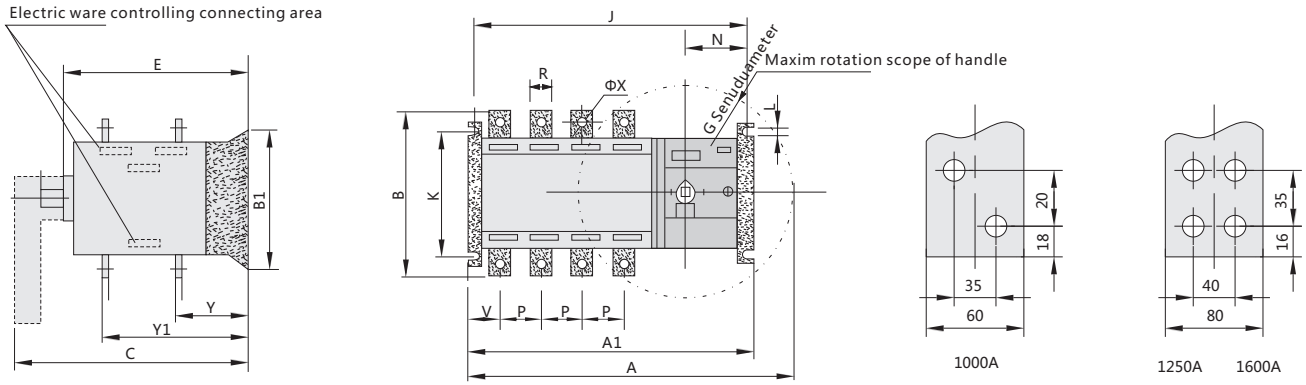

2000 ~ 3150A

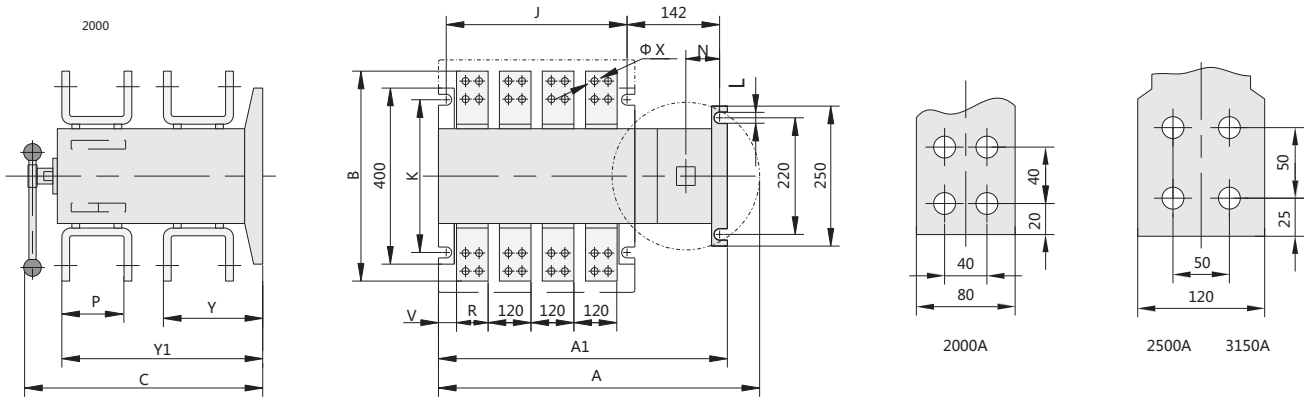

«Электро-Профи» - www.ep.ru

5. Connection diagram

Specification	NH40SZ Mounting dimensions														
Ith/Poles	A	A1	B	C	E	J	K	L	N	P	R	V	ΦX	Y	Y1
16A/3、4	305	245	106	170	133	234	84	7	75	30	14	10.5	6	36	86
32A/3、4	305	245	106	170	133	234	84	7	75	30	14	10.5	6	36	86
40A/3、4	305	245	106	170	133	234	84	7	75	30	14	10.5	6	36	86
63A/3、4	305	245	106	170	133	234	84	7	75	30	14	10.5	6	36	86
80A/3、4	305	245	106	170	133	234	84	7	75	30	14	10.5	6	36	86
100A/3、4	305	245	106	170	133	234	84	7	75	30	14	10.5	6	36	86
125A/3	380	292	135	240	208	275	78/108	7	87	36	20	20	9	58	135
160A/3	380	292	135	240	208	275	78/108	7	87	36	20	20	9	58	135
125A/4	410	320	135	240	208	312	78/108	7	87	36	20	20	9	58	135
160A/4	410	320	135	240	208	312	78/108	7	87	36	20	20	9	58	135
200A/3	420	330	170	240	208	312	78/108	7	87	50	25	27	11	60	140
250A/3	420	330	170	240	208	312	78/108	7	87	50	25	27	11	60	140
200A/4	470	380	170	240	208	358	78/108	7	87	50	25	27	11	60	140
250A/4	470	380	170	240	208	358	78/108	11	87	50	25	27	11	60	140
315A/3	455	382	240	315	270	365	180	11	95	65	32	37.5	11	84	195
400A/3	455	382	240	315	270	365	180	11	95	65	32	37.5	11	84	195
630A/3	455	382	260	315	270	365	180	11	95	65	40	37.5	13	84	195
315A/4	515	450	240	315	270	430	180	11	95	65	32	37.5	11	84	195
400A/4	515	450	240	315	270	430	180	11	95	65	32	37.5	11	84	195
630A/4	515	450	260	315	270	430	180	11	95	65	40	37.5	13	84	195
800A/3	900	520	310	368	320	500	220	11	85	120	60	60.5	13	108	252
1000A/3	900	520	310	368	320	500	220	11	85	120	60	60.5	13	108	252
1250A/3	900	520	360	368	320	500	220	11	85	120	70	60.5	13	108	252
1600A/3	900	520	360	368	320	500	220	11	85	120	80	60.5	13	108	252
800A/4	1010	635	310	368	320	610	220	11	85	120	60	60.5	13	108	252
1000A/4	1010	635	310	368	320	610	220	11	85	120	60	60.5	13	108	252
1250A/4	1010	635	360	368	320	610	220	11	85	120	70	60.5	13	108	252
1600A/4	1010	635	360	368	320	610	220	11	85	120	80	60.5	13	108	252
2000A/3	900	520	455	562	495	500	220	11	85	137	80	33	13	226	457
2000A/4	1010	635	455	562	495	610	220	11	85	137	80	33	13	226	457
2500A/3	900	520	455	562	495	500	220	11	85	137	80	33	13	226	457
2500A/4	1010	635	455	562	495	610	220	11	85	137	80	33	13	226	457
3150A/3	900	520	505	562	495	500	220	11	85	142	120	13	13	230	462
3150A/4	1010	635	505	562	495	610	220	11	85	142	120	13	13	230	462

«Электро-Профи» - www.ep.ru

Machines Tool Apparatus

Full series of components choice



«Электро-Профи» - www.ep.ru



«Электро-Профи» - www.ep.ru

CHINT ELECTRIC

Fuses, Travel Switches, Universal Change-over Switches, Connection Terminals

Feuses



NRZ28-20
Solar Photo voltaic System Protection Fuse

Page P-001



CRT36-00
DC Fuse Protector

Page P-005



NRT36
Knife Contact Fuse Protector

Page P-010



NRT28
Cylindrical Contact Caps Fuse Holder

Page P-015



RT28
Cylindrical Contact Caps Fuse Protector

Page P-017



RT29
Fuse with Cylindrical Cap

Page P-020



RT36
Knife Contact Fuse Protector

Page P-024

Terminal Blocks



SAK

Page P-029



JXB

Page P-031



JCUK

Page P-033

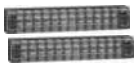

TB

Page P-035



TC

Page P-037



TH35-7.5(C45)
Rail

Page P-039

Change-over Switch



LW32

Page P-040

Combination Switch



HZ10

Page PK-046

Travel Switch



YBLX-ME

Page P-049



YBLX-WL

Page P-052



YBLX-CK

Page P-056



YBLX-P1

Page P-060

«Электро-Профи» - www.ep.ru

Fuses, Travel Switches, Universal Change-over Switches, Connection Terminals

Travel Switch



YBLX-K1

Page P-065



YBLX-K3

Page P-067



YBLX-10

Page P-070



YBLX-19

Page P-071

Foot Switch



YBLT-3、YBLT-4

Page P-073



YBLT-EKW/5A/B

Page P-075



YBLT-FS/1

Page P-076



YBLT-FS/201

Page P-077

Microswitch



YBLXW-5

Page P-078



YBLXW-6

Page P-084

Controller



JD

Page P-088

«Электро-Профи» - www.ep.ru



NRZ28-20
Solar Photo voltaic System Protection Fuse

1. General

NRZ28-20 PV system protection fuse is applicable for short circuit protection of distribution lines with rated voltage not exceeding DC1000V, rated current not exceeding 20A, and rated short-circuit capacity not exceeding 20kA.

NRZ28-20 series is a compact, high-capacity, low-power fuse series specifically developed by Chint Electric for photovoltaic power system, mainly for the solar photovoltaic system protection fuses, this series of fuse adopts high-quality materials and passes stringent tests by well-known manufacturers.

The main material of base is DMC-2; that of conductive socket is H62. Breaking range and utilization category: NRZ28-20 fuse link is "gPV" type, "gPV" represents the fuse link used for PV system with a full range of DC breaking capacity.

This product complies with GB / T 13539.6, IEC60269-6, and has obtained CQC, TUV, CE and other domestic and international certification.

2. Type designation

2.1 Type designation of fuse base

N RZ 28 - / □□

- N — Company code
- RZ — DC fuse
- 28 — Design sequence No.
- □ — Rated current of the fuse
- □ — Rated current of the fuse link

3. Operating conditions

3.1 Ambient temperature: -25 ℃~+60 ℃
Temperature of the air directly surrounding the fuse link, should not be confused with room temperature. In many practical situations, the fuse link temperature is very high, which is because the fuse link is condiagramd to support pieces / base of different structures and the entire fuse is enclosed in the distribution / control cabinet.

3.2 Atmospheric conditions: Temperature: relative humidity of the air at the mounting site does not exceed 50% when the maximum temperature is +60 ℃; a higher relative humidity is allowed at the lowest temperature, the monthly average minimum temperature of the wettest month does not exceed -25 ℃, the monthly average maximum relative humidity does not exceed 90%. Measures must be taken in the case of condensation on the product due to temperature changes.

3.3 Pollution degree: 3

3.4 Mounting category: Ⅲ

3.5 Mounting place: fuse should be a place without significant shake or shock and vibration

3.6 If the conditions are different from above, please consult with the manufacturer.

3.7 Altitude: Current correction coefficient used in different altitudes is in the following table:

«Электро-Профи» - www.ep.ru

Altitude	≤2000m	2000m~3000m	≥3000m	Example
Current correction coefficient	1	0.9	0.8	The rated current of 10A rated current product at 2500m altitude after derating is 0.9X10 = 9A

4. Technical data

4.1 The main technical parameters (see Table 1)

Table 1

Model	Rated voltage (DC) V	Breaking capacity (kA)	Rated dissipation power (W)	Temperature rise (K)	Rated current (A)
NRZ28-20	1000	20、35 (15A)	≤3	≤70	2, 3, 4, 5, 6, 8, 10, 12, 15, 16, 20

4.2 Derating effect

At the 20 ℃ ambient temperature, we recommend the actual operating current of fuse link shall not exceed the rated current value. take the environment and working conditions into account when selecting fuse link, such as extent of enclosure, air flow, size of connection cable (length, cross-section) and changes in the instantaneous peak and other aspects; current carrying capacity test of fuse link is conducted at 20 ℃ ambient temperature, and is affected by changes in ambient temperature during actual use. The higher the ambient temperature is, the higher the operating temperature of the fuse link is, and the shorter its life expectancy is. Instead, the life of the fuse link will be extended if running at lower temperatures.

The diagram below shows a typical curve of the impact of ambient temperature on the current carrying capacity

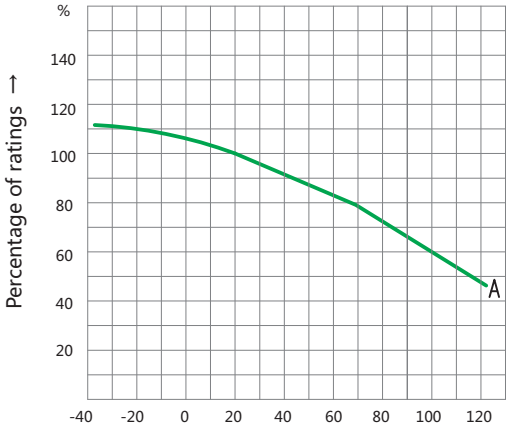

Ambient temperature - carrying capacity curve

Where: curve line is "gPV" type fuse link curve for protection

For example: When the ambient temperature of use is 20 ℃, select rated current of "gPV" type fuse link In= 16A, if these fuse links are used in 60 ℃ high temperature environment, must additionally reduce the operating current, the curve A on the left indicates percentage of ratings at 70 ℃ is 0.78, to ensure that the fuse link does not malfunction, should re-select the rated current of the fuse link: In = 16A/0.78 = 20.512A; according to standard current rating of fuse link select In = 20A.

«Электро-Профи» - www.ep.ru

4.3 Fuse characteristic curve

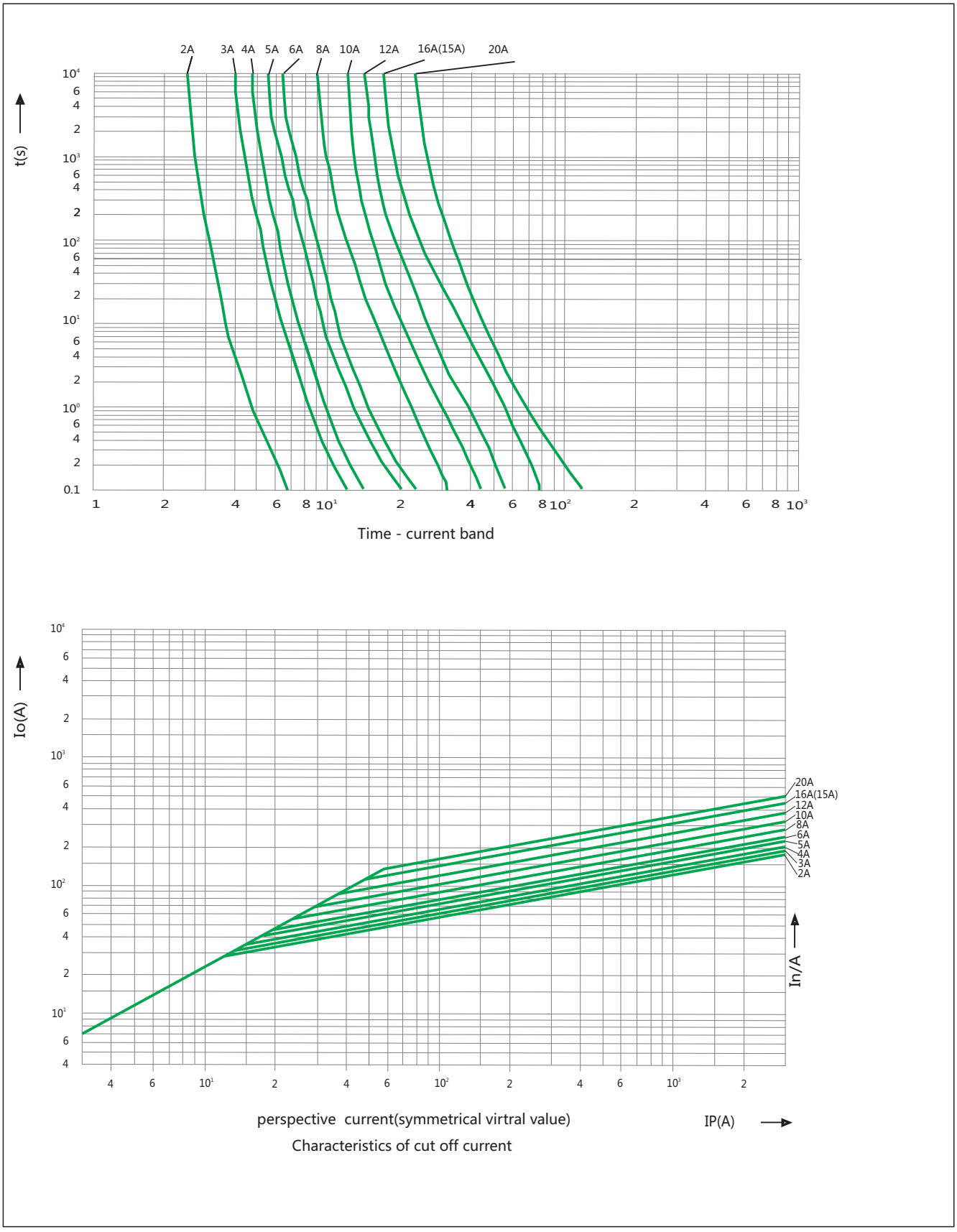

5. Overall and mounting dimensions

Diagram 1 Overall and mounting dimensions of NRZ28-20 base

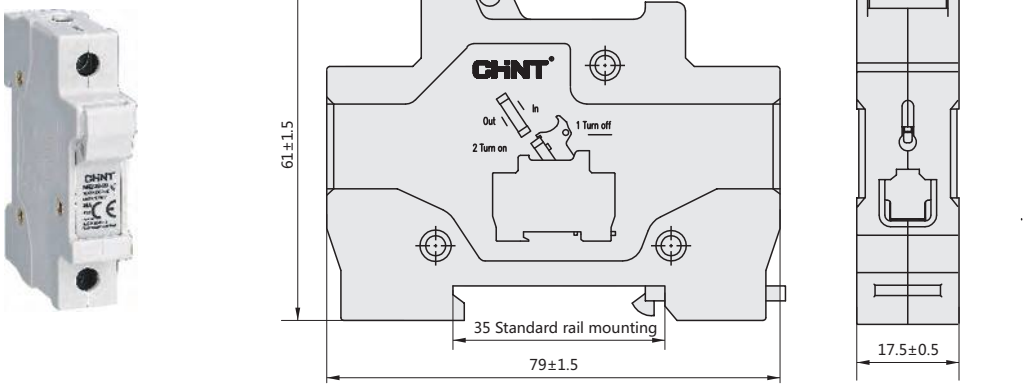

Diagram 2 Overall and dimensions of NRZ28-20 fuse link

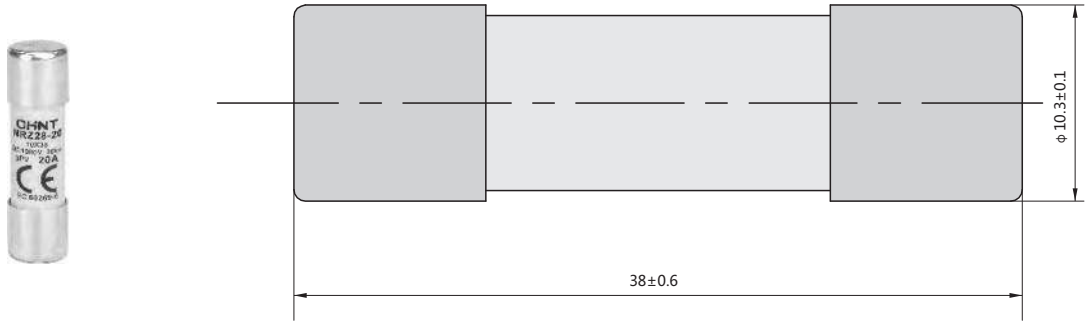

6. Ordering information

6.1 The following must be specified when ordering:
6.1.1 The product model, rated current and quantity for the fuse link.
6.1.2 The model specifications for the base, indicating the base, poles and the number of orders.

6.2 Order example
Order 100 pieces of NRZ28-20/10A, representing ordering 100 pieces of fuse link of model NRZ28-20 and rated current 10A.
100 pieces of NRZ28-20 (base), representing ordering 100 pieces of fuse base of model NRZ28-20.

«Электро-Профи» - www.ep.ru



CRT36-00 DC Fuse Protector

1. General

CRT36-00 DC fuse protector is applicable to DC circuit with rated voltage not more than DC80V, rated current not more than 600A and rated short-circuit capacity not more than 25kA for short-circuit protection.

Its base materials are DMC resin and T3 red copper; its main material is high-frequency electric porcelain and T3 red copper. CRT36-00 series is a fuse protector series with miniaturization, large capacity, low power consumption and high limit flow capacity, specially designed by Chint Group for communication industry power supply cabinet, power distribution cabinet and other power distribution system in communication industry. Such series fuse protector has passed through serious test of well-known manufactures in communication industry.

Breaking scope and use categories: gS.

It conforms to GB/T 13539.4, IEC 60269-4 and EU RoHS environmental protection requirements and has obtained CCC, TUV and other domestic and international certification.

2. Type designation

C R T 36 - 00

- 00 — Size
- 36 — Design sequence No.
- T — Knife contact
- R — Fuse protector
- C — For communication

3. Operating conditions

3.1 Ambient temperature: - 35 ℃ ~ + 40 ℃.

3.2 Atmospheric conditions: humidity: the relative air humidity in installation site is not more than 50% when the maximum temperature is +40 ℃ and it is allowed to have a higher relative humidity at the lowest temperature. In the wettest month, the average monthly lowest temperature is not more than +25 ℃ and the average monthly maximum relative humidity is not more than 90%. Measures shall be taken if there is condensation on products due to changes in temperature.

3.3 Class of pollution: Class III

3.4 Installation category: Category III

3.5 Altitude at installation site is not more than 2000m.

3.6 If the service condition is different from the above, please negotiate with manufacturer.

«Электро-Профи» - www.ep.ru

4. Technical data

4.1 Main technical parameters (See Table 1)

Table 1

Type specification	Rated voltage (V)	Breaking capacity(kA)	Rated dissipation power(W)	Temperature rising (K)	Rated current(A)
CRT36-00	80	25	≤30	≤70	2, 4, 6, 10, 16, 20, 25, 32, 35, 40, 50, 63, 80, 100, 125, 160, 200, 224, 250, 300, 315, 355, 400, 425, 500, 600

4.2 Conventional fusing and conventional non-fusing (see Table 2)

Table 2

Rated current (A)	Conventional time(h)	Conventional non-fusing current Inf(A)	Conventional fusing current If(A)
In≤4	1	1.5In	2.1In
4 < In < 16	1	1.5In	1.9In
16≤In≤63	1	1.25In	1.6In
63 < In≤160	2	1.25In	1.6In
160 < In≤400	3	1.25In	1.6In
400≤In	4	1.25In	1.6In

4.3 Size code of pedestal and electric mechanical parameters (see Table 3)

Table 3

Specifications and models of pedestal	CRT36-00 160A	CRT36-00 250A	CRT36-00 600A
Adapted fuse-link tube No.	00	00	00
Rated current (A)	2A~160A	200A~250A	300A~600A
Rated voltage (V)	DC80V	DC80V	DC80V
Connection thread size	M8	M8/M10	M10/M12
Tightening torque of connection bolt (N.m)	11	11/21	21/38
Recommended copper conductor cross-section	70	120	400

4.4 Modified coefficient for using current at different altitudes (see Table 4)

Table 4

Altitude	≤2000m	2000m~3000m	≥3000m	Example
Modified coefficient of current	1	0.9	0.8	Altitude of product with rated current of 10A is 2500m Rated current (A) at lower capacity is 0.9×10=9A

4.5 Use at lower capacity

At 20 ℃ Ambient temperature, the recommended actual working current of fuse link shall not be more than rated current. Changes in environment and working conditions, such as sealing degree, air flow, connecting cable size (length, cross section), instantaneous peak value shall be taken into account when selecting fuse link. Test for current bearing capacity of fuse link is done at 20 ℃ Ambient temperature and fuse link will be affected by changes in Ambient temperature in actual use. The higher Ambient temperature, the higher working temperature and shorter service life of fuse link will be. To the contrary, running at lower temperature will extend the service life of fuse link.

The following figure is the typical curve of impact of Ambient temperature on current bearing capacity.

«Электро-Профи» - www.ep.ru

Ambient temperature- bearing capacity curve

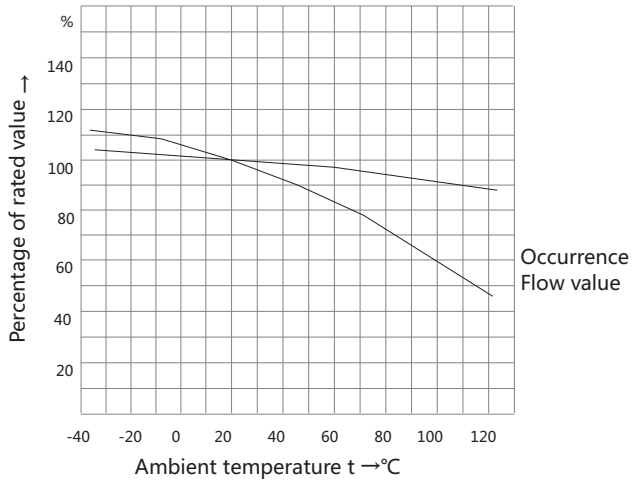

Where: Curve A: Ordinary (gS) fuse-link curve for line protection;
Curve B: Quick (aR) fuse-link curve for the protection of semiconductor device.

For example: When the Ambient temperature at a service site is 20℃ and select a (gS) fuse link with rated current of In=63A, the above fuse link shall be used at lower capacity under the high temperature of 70℃. Curve A in the figure at left side shows that the percentage of running rated value is 0.78 when the temperature is 70℃. In order to prevent fuse link from occurring misoperation, re-selection of rated current (In=63A/0.78 =80.77A) of such fuse link is required: select In=80A according to standard current class of fuse link.

4.6 Characteristic curve

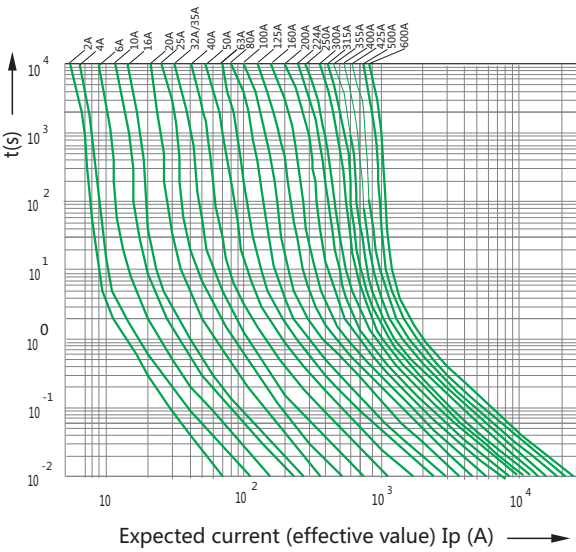

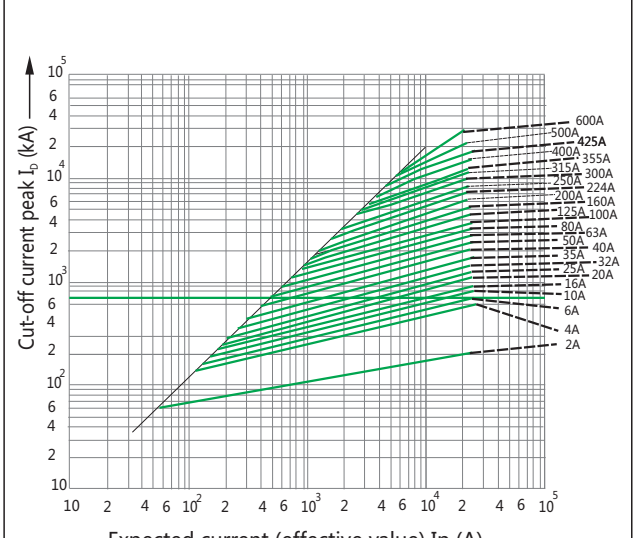

«Электро-Профи» - www.ep.ru

5. Overall and mounting dimensions

Fig. 1: CRT36-00 160A Pedestal appearance and installation dimensions

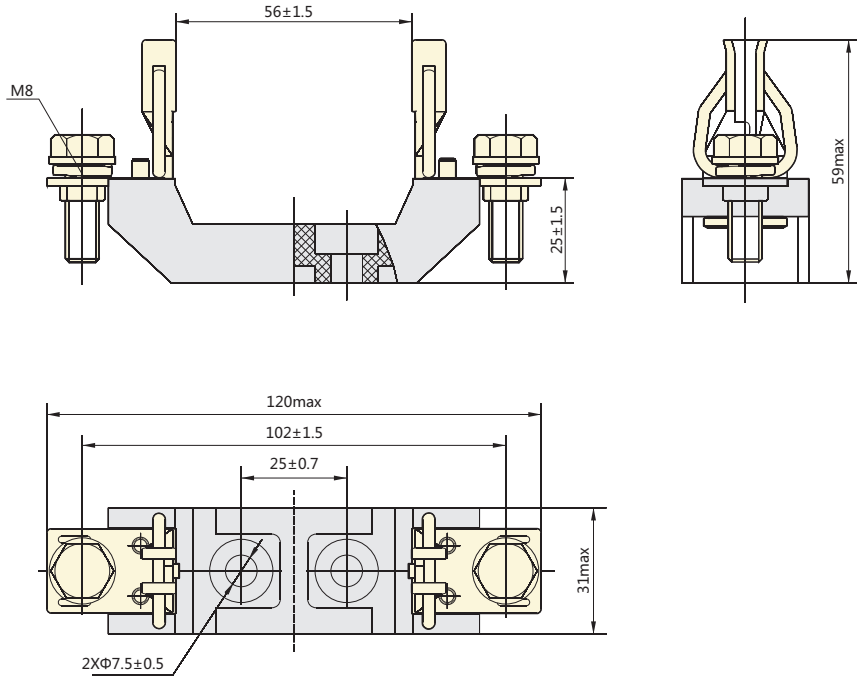

Fig. 2: CRT36-00 250A Pedestal appearance and installation dimensions

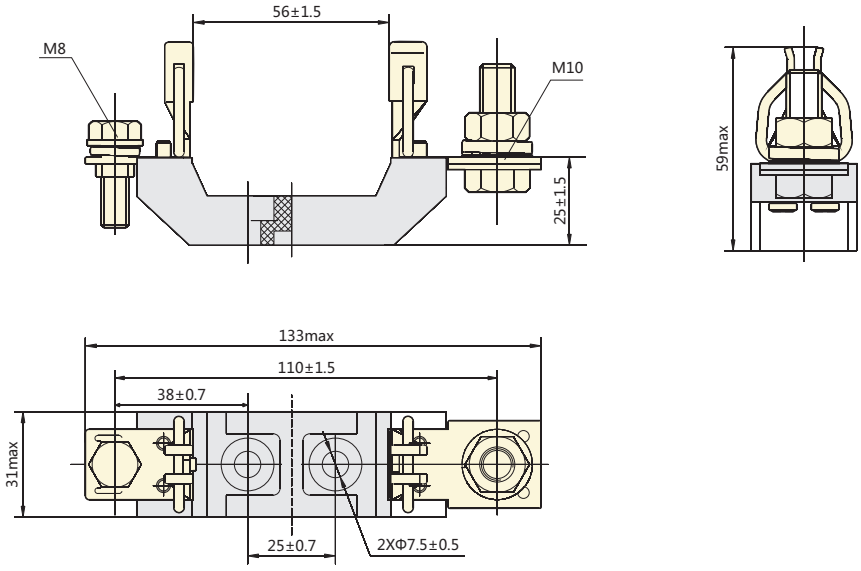

K

Fig. 3: CRT36-00 600 Pedestal appearance and installation dimensions

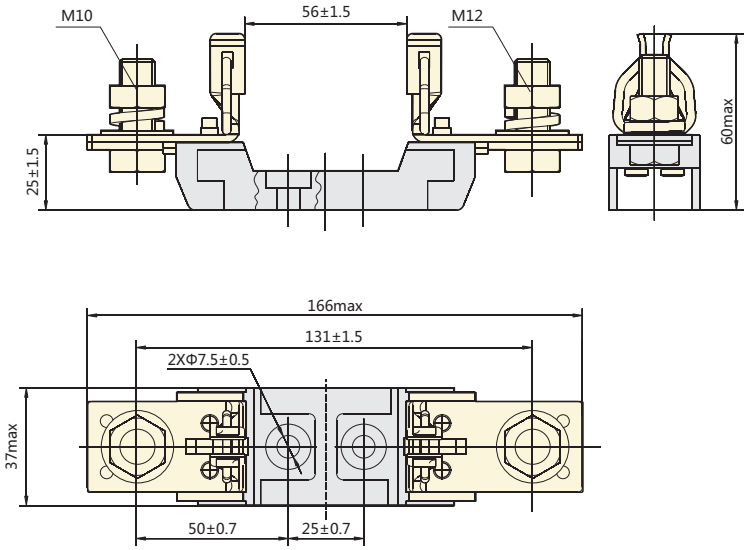

Fig. 4: CRT36-00 600A Fuse-link appearance dimensions

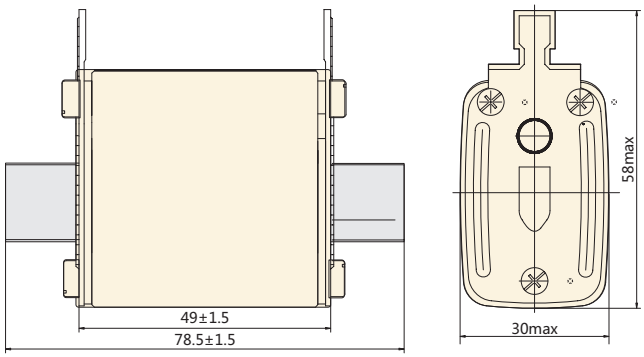

6. Ordering information

6.1 It needs to notify the following when ordering
Fuse link shall be marked with product model, rated current and quantity

6.2 It needs to notify the rated current of pedestal when ordering fuse-link pedestal

6.3 Ordering samples
For example: CRaaT36-00/600A, 100 fuse links represent 100 fuse links with product model of NRZ36-1 and rated current of 600A.
CRT36-00/160A 100 pedestals represent 100 pedestals with product model of CRT36-00 and rated current of 160A.

«Электро-Профи» - www.ep.ru



NRT36 Knife Contact Fuse Protector

1. General

NRT36-00 (NH00) Knife contact fuse protector (hereinafter referred to as "fuse protector") is a new and practical patent fuse protector designed by our company, suitable for overload or short-circuit protection in electric circuit with AC 45HZ to 62HZ, rated voltage not more than 690V and rated current not more than 160A. Such fuse protector is the latest high-tech products, designed by Chint Group for communication industry and it is outstanding among the previous similar products with three innovations:

The first is double indications. The product body is equipped with indicator, which highlights its indication advantages in dark night or within the case when fused mass melted and indicator illuminated;

The second is quick and convenient installation. This product is designed to provide users with a quick installation method and its guide rail installation can be done with screws for fixation;
The third is its free splicing, which is easy for mounting clapboard. Users can freely splice number of poles as required to conveniently mount clapboard.

The series products comply with GB/T 13539.2 and IEC 60269-2 standards and have obtained 3C certification and CB test report.

2. Type designation

N RT 36- 00/□ (NH 00-□)

- Rated current of fuse links
- Size
- Low-voltage fuse protector (knife contact fuse protector)
- Rated current of fuse links
- Size
- Design sequence No.
- Knife contact fuse protector
- Company code

K

«Электро-Профи» - www.ep.ru

3. Technical data

Type specification	Rated voltage (V)	Breaking capacity (kA)	Rated current (A)	Rated current of fuse protector(A)
NRT36-00(NH00)	AC500 AC660, AC690	120 50	2, 4, 6, 10, 16, 20, 25, 32, 35, 40, 50, 63, 80, 100, 125, 160	160

Characteristic curve of (N)RT36 series knife contact fuse protector

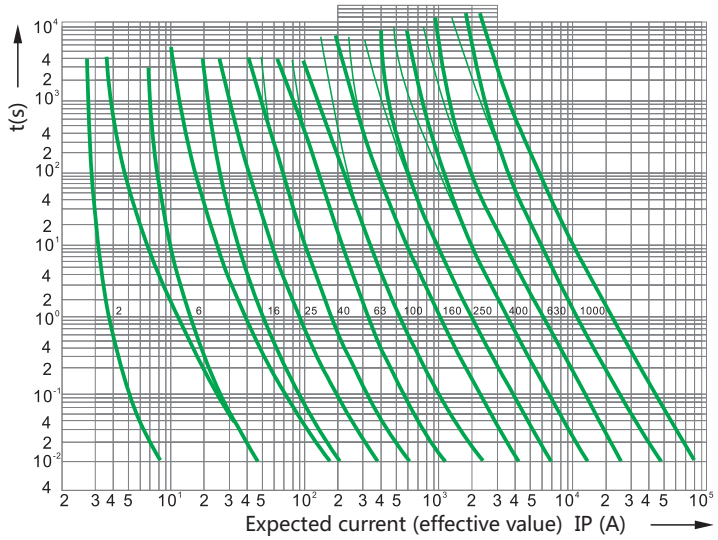

4. Overall and mounting dimensions

NRT36-00 Fuse link size

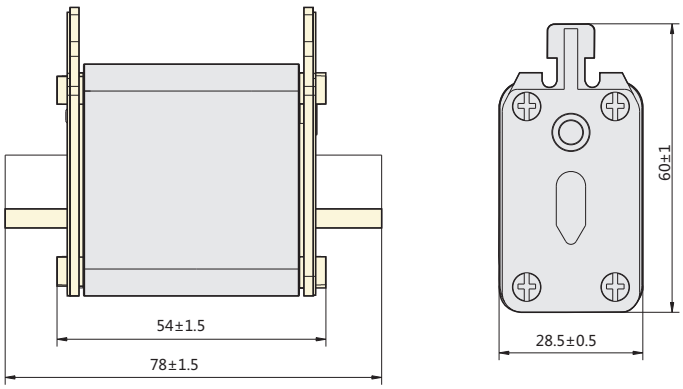

«Электро-Профи» - www.ep.ru

NRT36-00 Pedestal size

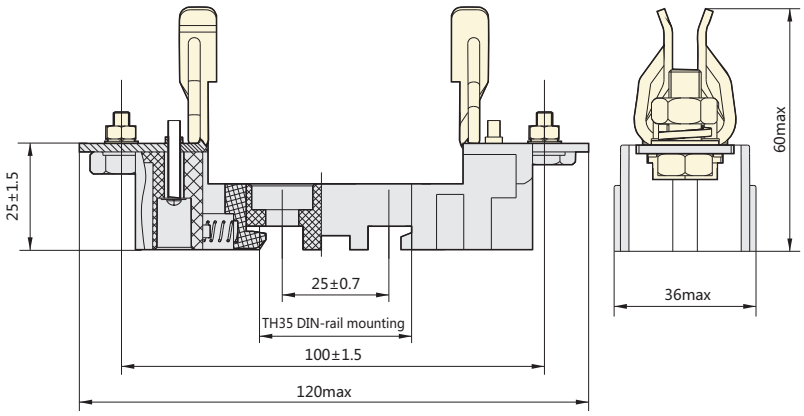

NRT36-00-3P pedestal size

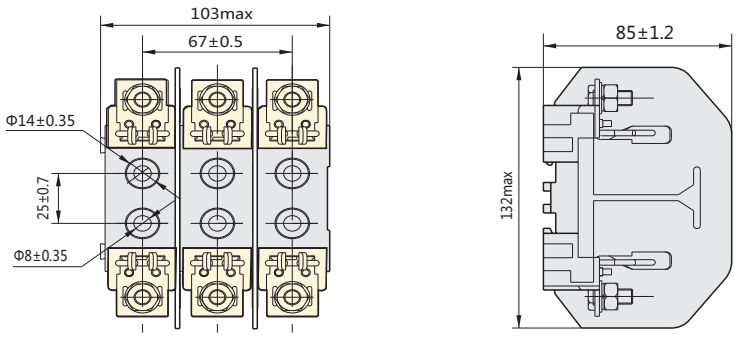

5. Interchangeability of fuse links and pedestal

The fuse link and pedestal of NRT36-00 and RT36-00 can be used interchangeably; namely, the fuse link of NRT36-00 can match the pedestal of NRT36-00 and RT36-00 at the same time. The difference is that NRT36-00 pedestal can be spliced and installed in guide rail style or with screws, while guide rail installation and splicing are not available for RT36-00 pedestal; only installation with screws is allowed. NRT36-00 fuse protector is equipped with indicator structures. The illuminating indicator shows that fuse links has melted. NRT36-00 fuse protector has no such structure.

«Электро-Профи» - www.ep.ru

6. Installation, use and maintenance

6.1 Before installation, check if the fuse link can be flexibly plugged.

6.2 NRT36-00 pedestal can be either installed with screws or with TH35 standard guide rail to realize rapid installation. Schematic Diagram of Guide Rail Installation is given here.

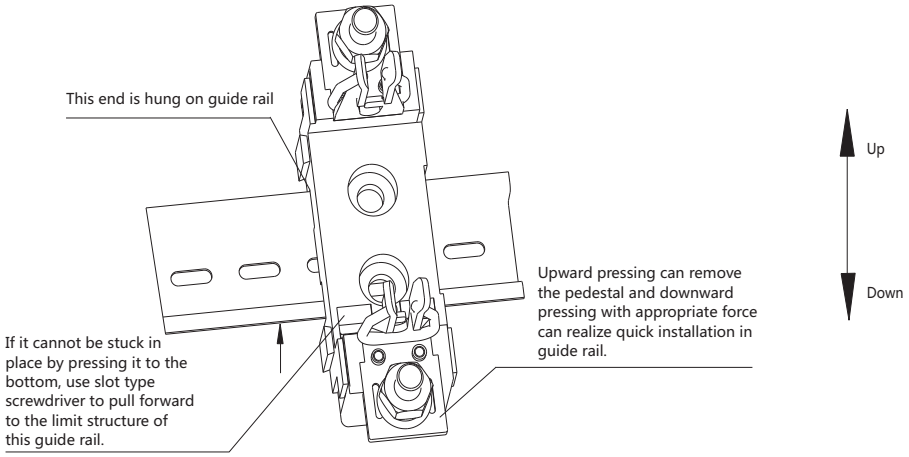

6.3 NRT36-00 pedestal is a new fuse protector pedestal, which can be spliced. When it is used in a multipolar structure, it must be equipped with supporting clapboard; otherwise, it cannot be used in a multipolar structure (commonly used, such as: three poles). Schematic diagram of splicing and assembly diagram in the case of three poles are as follows.

6.3.1 Schematic Diagram of 3P Pedestal Splicing

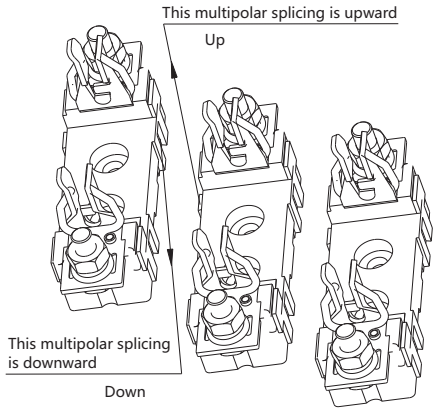

6.3.2 Schematic Diagram of 3P Assembly Splicing

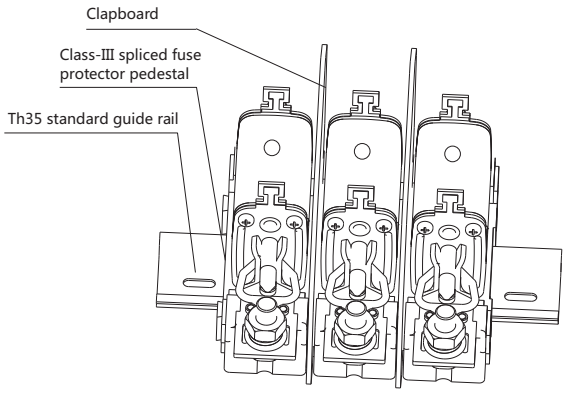

«Электро-Профи» - www.ep.ru

Characteristic curve of (N)RT36 series knife contact fuse protector

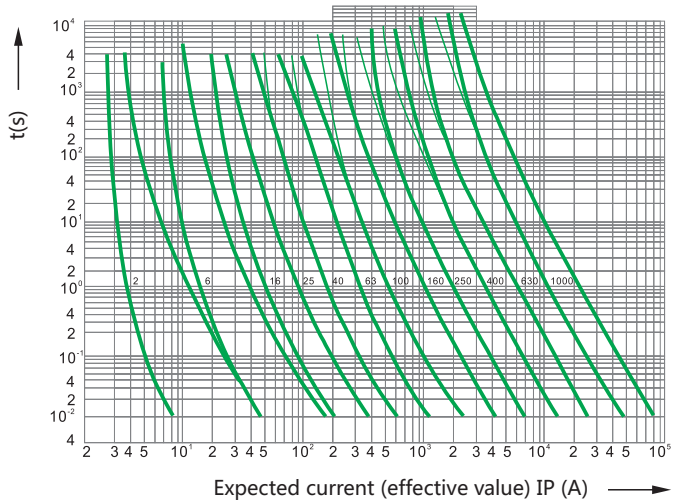

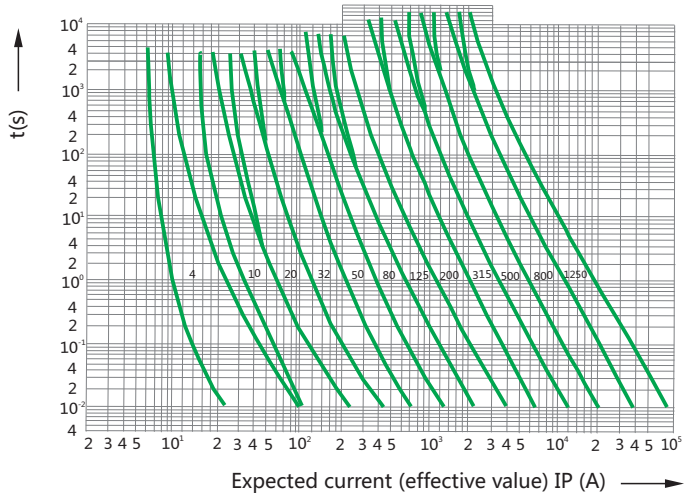

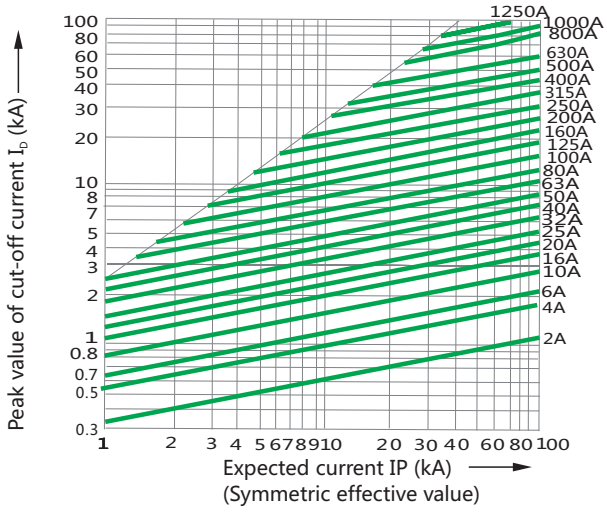

K

«Электро-Профи» - www.ep.ru



NRT28 Series Cylindrical Cap Fuse Holder

1. Application scope

NRT28 series cylindrical cap fuse applies to power distribution system with AC 50Hz, rated voltage of 500V, and rated current of 125A, to protect overload and short circuit (it is not recommended but RT36 fuse in capacitor box).

Neon light and resistance comprise the fuse base's fuse-link fuse signal device (code "X").

NRT28 series holder can be used in combination with RT28-32, RT28-63, and RT29-125 "gG" fuse links, "gG" is the general-purpose fuse link with full-range breaking capacity.

Standard: IEC 60269-2.

2. Model and meaning

N RT 28 - □□/□□

- Enterprise characteristic code
- Filled enclosed cartridge fuse
- Design code
- Rated current of fuse
- Base signal device (code "X")
- Number of poles (2P, 3P, single pole is not numbered)
- Rated current of fuse link

3. Normal operating and installation conditions

3.1 Parameter of fuse holder

Model	Rated voltage (V)	Nominal current (A)	Number of poles	Dimension								Weight (Kg)
				A	B	C	D	E	F	G	K	
NRT28-32(X)	500	32	1P	62.5±0.5	78.5±0.5	80±0.8	$18^{+0.6}_{-1.0}$	/	/	10.3±0.1	38±0.6	0.06
	500	32	2P	62.5±0.5	78.5±0.5	80±0.8	/	36	/	10.3±0.1	38±0.6	0.12
	500	32	3P	62.5±0.5	78.5±0.5	80±0.8	/	/	54	10.3±0.1	38±0.6	0.18
NRT28-63	500	63	1P	77±1.5	108±1.0	112±1.8	27±0.5	/	/	14.3±0.1	$51^{+0.6}_{-1.0}$	0.15
	500	63	2P	77±1.5	108±1.0	112±1.8	/	54±1.0	/	14.3±0.1	$51^{+0.6}_{-1.0}$	0.30
	500	63	3P	77±1.5	108±1.0	112±1.8	/	/	81±1.5	14.3±0.1	$51^{+0.6}_{-1.0}$	0.45
NRT28-125	500	125	1P	77±1.5	126±1.0	128±1.8	35±0.5	/	/	22.2±0.1	$58^{+0.1}_{-2.0}$	0.20
	500	125	2P	77±1.5	126±1.0	128±1.8	/	70±1.0	/	22.2±0.1	$58^{+0.1}_{-2.0}$	0.40
	500	125	3P	77±1.5	126±1.0	128±1.8	/	/	105±1.5	22.2±0.1	$58^{+0.1}_{-2.0}$	0.60

3.2 Parameter of fuse link

Model	Similar products at home and abroad	Size (G×K)	Rated voltage (V)	Nominal current (A)	Dissipation power (W)	Breaking capacity (kA)	Weight (Kg)
RT28-32	RT18-32,RT14-20,RT19-32,R015	10×38	500	2,4,6,10,16,20,25,32	≤3	100	0.009
RT28-63	RT18-63,RT14-32,RT19-63,R016	14×51	500	2,4,6,10,16,20,25,32,40,50,63	≤5	100	0.022
RT29-125	RT14-63,RT29-125,R017	22×58	500	10,16,20,25,32,40,50,63,80,100,125	≤9.5	100	0.06

«Электро-Профи» - www.ep.ru

3.3 Parameter of fuse holder and fuse link

Model of holder	Equipped fuse link		
	Size (mm)	Model of fuse link	Current (A)
NRT28-32(X)	10×38	RT28-32,R015	2,4,6,10,16,20,25,32
NRT28-63	14×51	RT28-63,R016	2,4,6,10,16,20,25,32,40,50,63
NRT28-125	22×58	RT29-125,R017	10,16,20,25,32,40,50,63, 80,100,125

4. Overall and mounting dimensions

NRT28-32

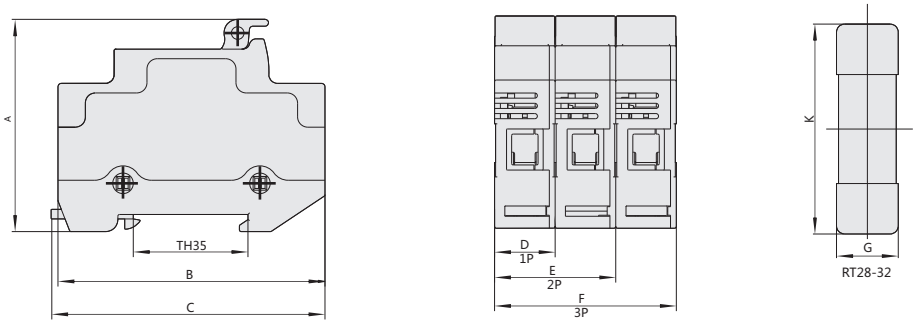

NRT28-63、NRT28-125

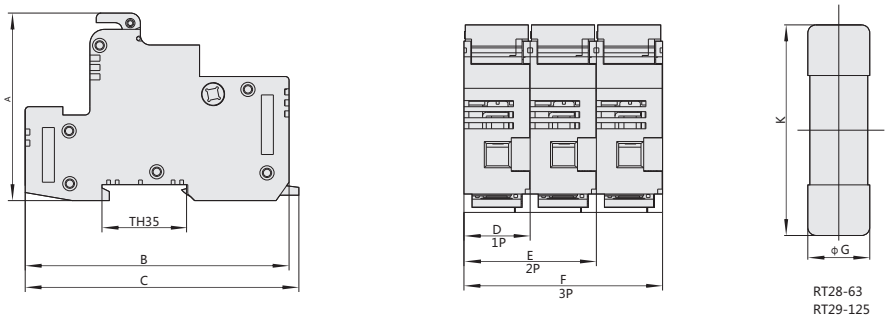

5. Ordering Information

5.1 Must be specified when ordering

5.1.1 Fuse must be specified the product model、rated current、 quantity

5.1.2 Base must be specified the specification、 specify the base, the number of poles、order amount

5.2 Order example

When order 100 RT28-32 20A fuses only can be written RT28-32/20A、100 ;

When order 100 3 poles of NRT28-32 bases only can be written NRT28-32/3P(Base)、100.

K

«Электро-Профи» - www.ep.ru



RT28 Cylindrical Contact Caps Fuse Protector

1. General

Rt28 Cylindrical contact caps fuse protector is applicable to the distribution equipment with AC 50Hz, rated voltage of 500V and rated current not more than 63A for circuit overload and short-circuit protection (RT36-00 fuse protector is recommended to be used in capacitor box instead of this kind of fuse protector).

Neon light and resistors constitute fusing signal device of fuse link of fuse protector pedestal (symbol "X").

RT28-32 and RT28-63 fuse link is divided into "gG" type; "gG" is ordinary fuse protector with full range of breaking capacity.

This product conforms to GB/T 13539.2 and IEC 60269-2 standards; its technical indicators have reached international advanced level. "gG" fuse links can match RT28 or RT29 pedestal. This product complies with GB/T 13539.2 and IEC 60269-2.

2. Type designation

RT 28 (N) □ □/□ □

- Rated current of fuse links
- Number of poles (monopolar is not numbered)
- Signal device (symbol "X")
- Rated current of fuse protector
- NEW (new model and appearance)
- Design sequence No.
- Code of powder-filled cartridge fuse protector

3. Technical data

3.1 Parameters of fuse protector supporter (pedestal)

Model	Rated voltage(V)	Rated current(A)	Number of poles	Size							Weight (kg)
				A	B	D	E	F	G	K	
RT28N-32	500	32	1P	79±1.5	74±1.5	55±1.0	60±1.5	17.5±0.5	10.3±0.1	38±0.6	0.075
	500	32	2P	79±1.5	74±1.5	55±1.0	60±1.5	35±1.0	10.3±0.1	38±0.6	0.16
	500	32	3P	79±1.5	74±1.5	55±1.0	60±1.5	52.5±1.5	10.3±0.1	38±0.6	0.24
RT28N-32X	500	32	1P	79±1.5	74±1.5	55±1.0	60±1.5	17.5±0.5	10.3±0.1	38±0.6	0.075
	500	32	2P	79±1.5	74±1.5	55±1.0	60±1.5	35±1.0	10.3±0.1	38±0.6	0.16
	500	32	3P	79±1.5	74±1.5	55±1.0	60±1.5	52.5±1.5	10.3±0.1	38±0.6	0.24
RT28-63	500	63	1P	102±2.0	100±1.2	72±1.0	80±2.0	26.5±0.5	14.3±0.1	$51^{+0.6}_{-1.0}$	0.18
	500	63	2P	102±2.0	100±1.2	72±1.0	80±2.0	53±1	14.3±0.1	$51^{+0.6}_{-1.0}$	0.36
	500	63	3P	102±2.0	100±1.2	72±1.0	80±2.0	79.5±1.5	14.3±0.1	$51^{+0.6}_{-1.0}$	0.54
RT28-63X	500	63	1P	102±2.0	100±1.2	72±1.0	80±2.0	26.5±0.5	14.3±0.1	$51^{+0.6}_{-1.0}$	0.18
	500	63	2P	102±2.0	100±1.2	72±1.0	80±2.0	53±1	14.3±0.1	$51^{+0.6}_{-1.0}$	0.36
	500	63	3P	102±2.0	100±1.2	72±1.0	80±2.0	79.5±1.5	14.3±0.1	$51^{+0.6}_{-1.0}$	0.54

«Электро-Профи» - www.ep.ru

3.2 Parameters of fuse links

Model	Similar models at home and abroad	Size (G×K)	Rated voltage(V)	Rated current(A)	Dissipation power(W)	Breaking capacity(kA)	Weight (kg)
RT28-32	RT18-32, RT14-20, RT19-32, R015	10×38	500	2, 4, 6, 10, 16, 20, 25, 32	≤3	100	0.009
RT28-63	RT18-63, RT14-32, RT19-63, R016	14×51	500	2,4,6,10, 16, 20, 25, 32, 40, 50, 63	≤5	100	0.022

3.3 Configuration parameters of fuse protector supporter (pedestal) and fuse links

Fuse protector pedestal Model	Supporting fuse protector		
	Size(mm)	Model of fuse links	Current(A)
RT28N-32 RT28N-32X NRT28-32X NRT28-32	10×38	RT28-32, R015	2, 4, 6, 10, 16, 20, 25, 32
RT28-63 RT28-63X NRT28-63	14×51	RT28-63, R016	2,4,6,10, 16, 20, 25, 32, 40, 50, 63
NRT28-125	22×58	RT29-125,R017	10,16,20,25, 32, 40, 50, 63, 80, 100, 125

4. Overall and mounting dimensions

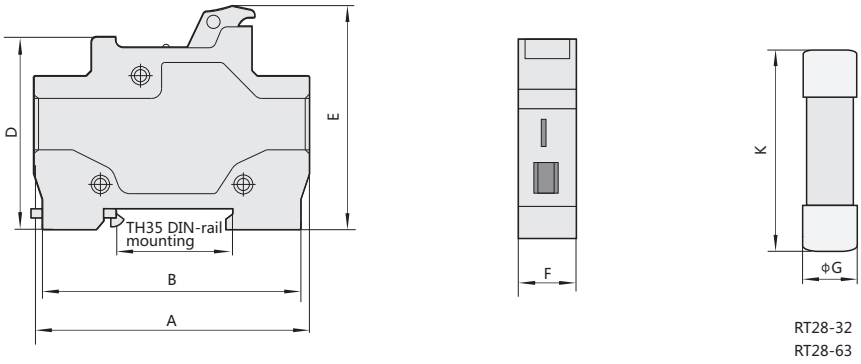

RT28-32
RT28-63

K

5. Schematic diagram

Matched schematic diagram of fuse protector supporter (pedestal) and fuse links

Matched schematic diagram of fuse protector supporter (pedestal) and fuse links with size of 10×38

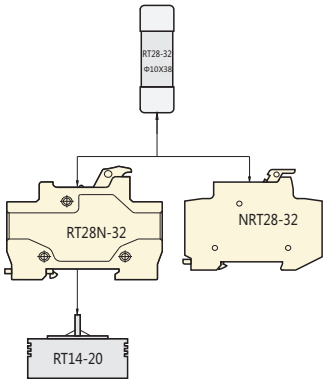

Matched schematic diagram of fuse protector supporter (pedestal) and fuse links with size of 14×51

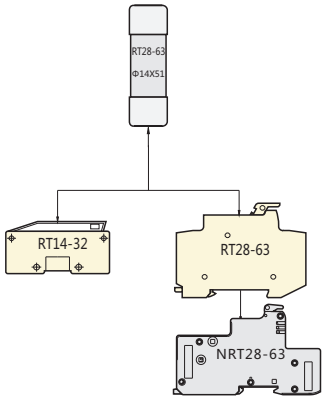

Matched schematic diagram of fuse protector supporter (pedestal) and fuse links with size of 22×58

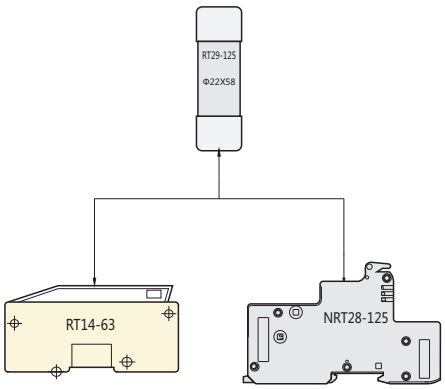

6. Ordering information

6.1 It needs to notify the following when ordering:
6.1.1 Fuse link shall be marked with product model, rated current and quantity.
6.1.2 Pedestal shall be marked with type, specification, pedestal mark, number of pole and quantity.

6.2 Ordering example
100 RT28-32 20A fuse links can be expressed as
100 RT28-32/20A fuse links.
100 NRT28-32 pedestal of three poles can be
expressed as 100 NRT28-32/ 3P pedestals.

«Электро-Профи» - www.ep.ru



RT29
Fuse with Cylindrical Cap

1. General

RT 29 type fuse with cylindrical cap applies to distribution configuration of AC 50Hz, rated voltage 500V and rated current of 125A for protection from overload and short-circuit. (This type of fuse is not recommended of using in the electric capacity cabinet, if so, RT36-00 shall be used as replacement). Fuse equipped with impinger can be used as open-phase protection for the electric motor. Fuse-link for general service with full range of breaking capacity shall be "gG" type which can be used for line protection.

2. Type designation

RT 29- □/□

- Rated current of the fuse-link
- Rated current of the fuse
- Design sequence No.
- Code for fuse of sealed-tube with material

3. Technical data

3.1 Parameters of fuse protector supporter (pedestal)

Model	Similar models at home and abroad	Rated voltage (V)	Rated current(A)	Length C	D	Width E	Height H
RT29-16	RT19-16	500	16	70	31	20.2±0.22	45

3.2 Parameter of fuse-link

Model	Similar models at home and abroad	Size (B×A)	Rated voltage(V)	Rated current(A)	Dissipation power(W)	Breaking capacity(kA)	Weight (kg)
RT29-16(RO14)	RT19-16	8×32	500	2, 4, 6, 10, 16	≤2.5	100	0.0045
RT29-125(RO17)	RT19-125	22×58	500	10,16,20,25, 32, 40, 50, 63, 80, 100, 125	≤9.5	100	0.06

«Электро-Профи» - www.ep.ru

3.3 Fuse holder (chassis) and parameter of configuration of fuse-link

Fuse holder (chassis) Model	Supporting fuse protector		
	Size(mm)	Model of fuse links	Current(A)
RT29-16	8×32	RT29-16	2, 4, 6, 10, 16

4. Schematic diagram

Fuse chassis used with fuse-link

Matched schematic diagram of fuse protector supporter (pedestal) and fuse links with size of 10×38

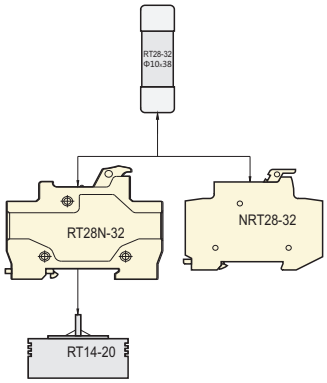

Matched schematic diagram of fuse protector supporter (pedestal) and fuse links with size of 14×51

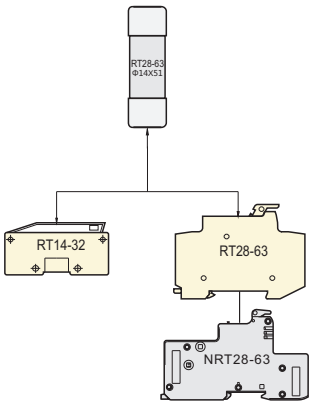

Matched schematic diagram of fuse protector supporter (pedestal) and fuse links with size of 22×58

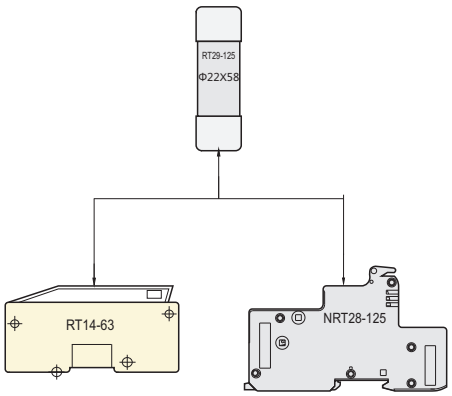

«Электро-Профи» - www.ep.ru

5. Overall and mounting dimensions

RT29-16 Chassis

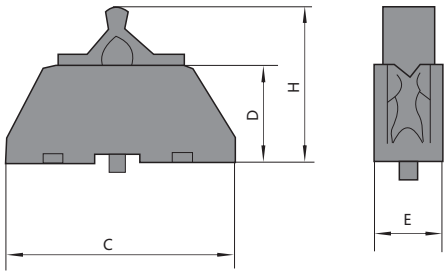

RT29-16Fuse-link

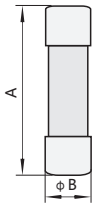

RT29-16 fuse used with RT29-16 chassis

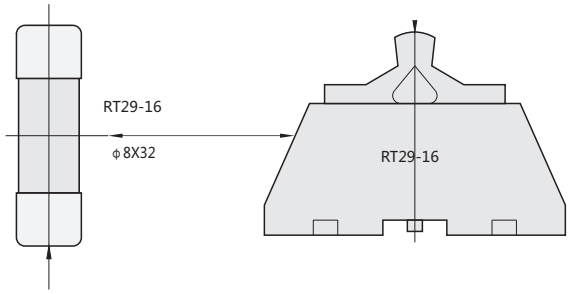

6. Ordering information

6.1 Specifications must be made when ordering:
6.1.1 Fuse-link shall refer to product model, rated current and quantity.
6.1.2 Fuse holder (chassis) shall define the type specification, indicate the chassis, number of poles and number of orders

6.2 Examples for ordering: RT29-16,16A 100 pieces, represents as the fuse-link with ordering No.RT29-16/16A,100,pieces
RT29-16 (chassis) 100 pieces, represents as the fuse chassis with ordering No. RT29-16, 100 pieces.

K

«Электро-Профи» - www.ep.ru

RT28, RT29 Fuse with Cylindrical Cap
Protection Characteristic Curve

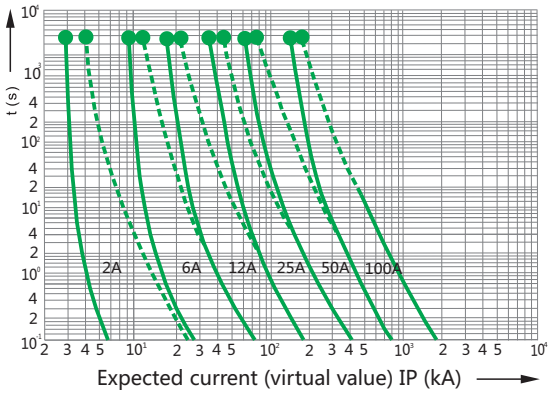

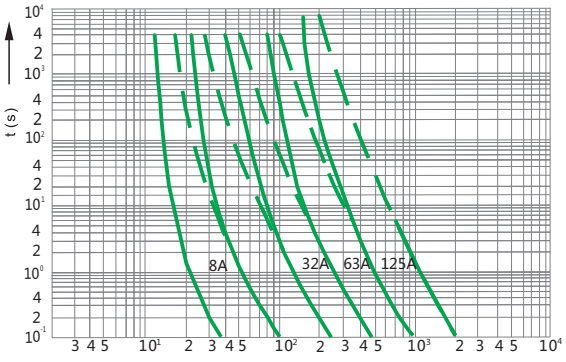

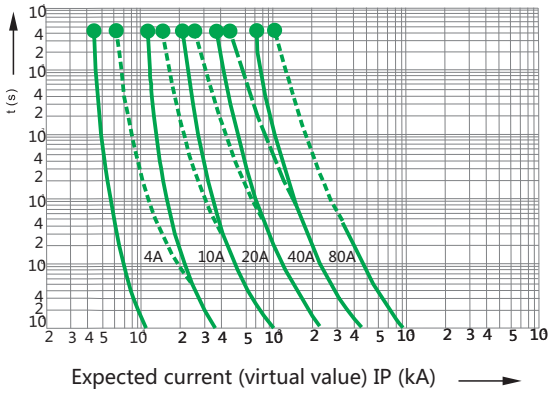

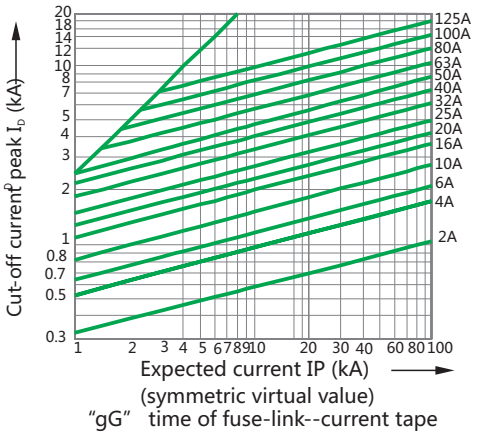

«Электро-Профи» - www.ep.ru



RT36 Knife Contact Fuse Protector

1. General

RT36 Knife contact fuse protector is a new fuse protector designed by our company and featured by small size, light weight, low consumption and high breaking capacity, etc.; and widely used for overload protection and short-circuit protection of electric device.

The series products are divided into "gG" type; "gG" is ordinary fuse protector with full range of breaking capacity. This product conforms to GB/T 13539.2 and IEC 60269-2 standards; its technical indicators have reached international advanced level.

2. Type designation

RT 36- □□/□

- Rated current of fuse protector
- Size
- Design sequence No.
- Code of powder-filled cartridge fuse protector

K

«Электро-Профи» - www.ep.ru

3. Technical data

Table (continued)

Specifications	Similar models at home and abroad	Rated current (A)	Rated voltage (V)	Rated power (W)	Weight (Kg)	Breaking capacity (kA)
RT36-00	RT16-00(NT00)	4	AC500/AC690/DC250	1.5	0.15	120/50/100
		6	AC500/AC690/DC250	1.6	0.15	120/50/100
		10	AC500/AC690/DC250	1.7	0.15	120/50/100
		16	AC500/AC690/DC250	2.0	0.15	120/50/100
		20	AC500/AC690/DC250	2.5	0.15	120/50/100
		25	AC500/AC690/DC250	3.1	0.15	120/50/100
		32	AC500/AC690/DC250	3.5	0.15	120/50/100
		35	AC500/AC690/DC250	3.8	0.15	120/50/100
		40	AC500/AC690/DC250	4.0	0.15	120/50/100
		50	AC500/AC690/DC250	5.3	0.15	120/50/100
		63	AC500/AC690/DC250	6.1	0.15	120/50/100
		80	AC500/AC690/DC250	6.9	0.15	120/50/100
		100	AC500/AC690/DC250	10.0	0.15	120/50/100
		125	AC500/AC690/DC250	9.6	0.15	120/50/100
		160	AC500/AC690/DC250	12.0	0.15	120/50/100
RT36-0	RT16-0(NT0)	4	500/690	1.7	0.2	120/50
		6	500/690	2.0	0.2	120/50
		10	500/690	1.8	0.2	120/50
		16	500/690	2.5	0.2	120/50
		20	500/690	3.0	0.2	120/50
		25	500/690	3.5	0.2	120/50
		32	500/690	4.05	0.2	120/50
		35	500/690	4.0	0.2	120/50
		40	500/690	5.1	0.2	120/50
		50	500/690	7.25	0.2	120/50
		63	500/690	8.1	0.2	120/50
		80	500/690	10.26	0.2	120/50
		100	500/690	12.58	0.2	120/50
		125	500/690	15.62	0.2	120/50
		160	500/690	16.0	0.2	120/50
RT36-1	RT16-1(NT1)	80	AC500/AC690/DC440	8.35	0.36	120/50/100
		100	AC500/AC690/DC440	12.05	0.36	120/50/100
		125	AC500/AC690/DC440	13.46	0.36	120/50/100
		160	AC500/AC690/DC440	16.53	0.36	120/50/100
		200	AC500/AC690/DC440	20.8	0.36	120/50/100
		224	AC500/AC690/DC440	22.69	0.36	120/50/100
		250	AC500/AC690/DC440	23.0	0.36	120/50/100
RT36-2	RT16-2(NT2)	125	AC500/AC690/DC440	21.7	0.85	120/50/100
		160	AC500/AC690/DC440	22.7	0.85	120/50/100
		200	AC500/AC690/DC440	26.8	0.85	120/50/100
		224	AC500/AC690/DC440	28.9	0.85	120/50/100
		250	AC500/AC690/DC440	28.9	0.85	120/50/100
		300	AC500/AC690/DC440	32.0	0.85	120/50/100
		315	AC500/AC690/DC440	32.45	0.85	120/50/100
		355	AC500/AC690/DC440	33.66	0.85	120/50/100
		400	AC500/AC690/DC440	34.0	0.85	120/50/100
RT36-3	RT16-3(NT3)	315	AC500/AC690/DC440	34.45	0.85	120/50/100
		355	AC500/AC690/DC440	35.96	0.85	120/50/100
		400	AC500/AC690/DC440	38.09	0.85	120/50/100
		425	AC500/AC690/DC440	40.20	0.85	120/50/100
		500	AC500/AC690/DC440	45.23	0.85	120/50/100
		630	AC500/AC690/DC440	48.0	0.85	120/50/100
RT36-4	RT16-4(NT4)	800	AC500/DC440	75.08	1.95	120/100
		1000	AC500/DC440	90.0	1.95	120/100
		1250	AC500/DC440	110	1.95	120/100

«Электро-Профи» - www.ep.ru

4. Overall and mounting dimensions

4.1 Fuse link size

RT36

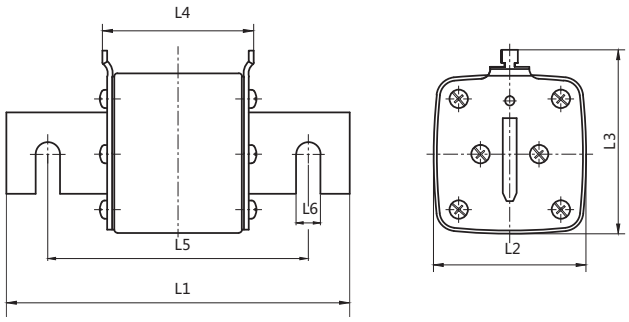

RT36

Size	RT36-00	RT36-0	RT36-1	RT36-2	RT36-3	RT36-4
L1	78.5±1.5	125±2.5	135±2.5	150±2.5	150±2.5	200±3.0
L2	30max	31max	49max	60max	69max	90max
L3	58max	58max	64max	74max	87max	114max
L4	49±1.5	$68^{+1.5}_{-3.0}$	68±2.5	68±2.5	68±2.5	90±0.3
L5	———	———	———	———	———	150±2.0
L6	———	———	———	———	———	15±0.2

Size	RT36-00	RT36-0	RT36-1	RT36-2	RT36-3	RT36-4
L1	120max	174max	201max	227max	255max	301max
L2	100±1.5	150±1.5	175±1.5	200±1.5	210±1.5	258±1.5
L3	61max	75max	86max	97max	105max	146max
L4	24±1.5	35±1.5	35±1.5	35±1.5	35±1.5	40±1.5
L5	25±0.7	25±0.7	25±0.7	25±0.7	25±0.7	30±0.7
L6	———	———	30±0.7	30±0.7	30±0.7	45±0.7
L7	8.3±0.3	7.5±0.5	10.5±0.5	10.5±0.5	10.5±0.5	14±0.5
L8	31max	31max	55max	62max	62max	76max
S	M8	M8	M10	M10	M12	M16

«Электро-Профи» - www.ep.ru

4.2 Fuse base size

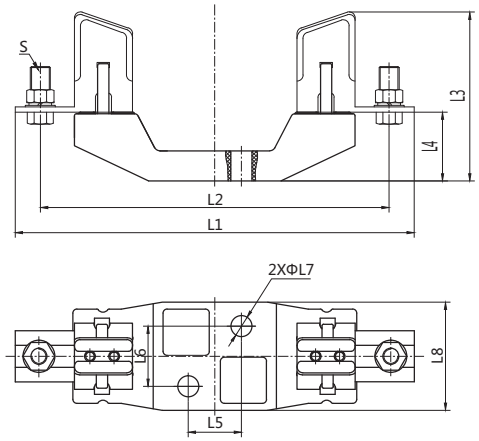

RT36-00-3P

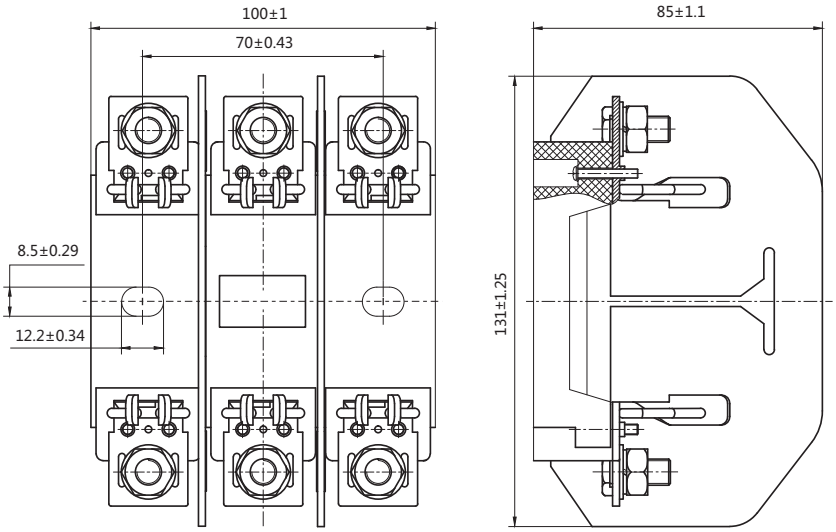

5. Ordering information

5.1 It needs to notify the following when ordering

5.1.1 Fuse link shall be marked with product model, rated current and quantity

5.1.2 Pedestal shall be marked with type, specification, pedestal mark and quantity.

5.2 Ordering example

For example: RT36-00/100A, 100 fuse links represent 100 fuse links with product model of RT36-00 and rated current of 100A.

RT36-00 100 pedestals represent 100 pedestals with product model of RT36-00.

«Электро-Профи» - www.ep.ru

RT36, HDLRT0
Knife Contact Fuse Protector
Protection Characteristic Curve

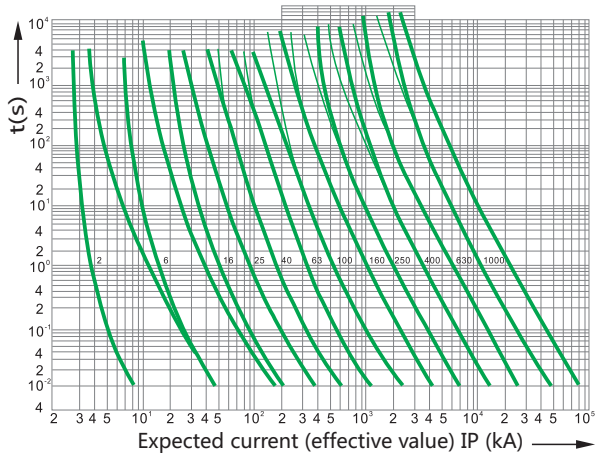

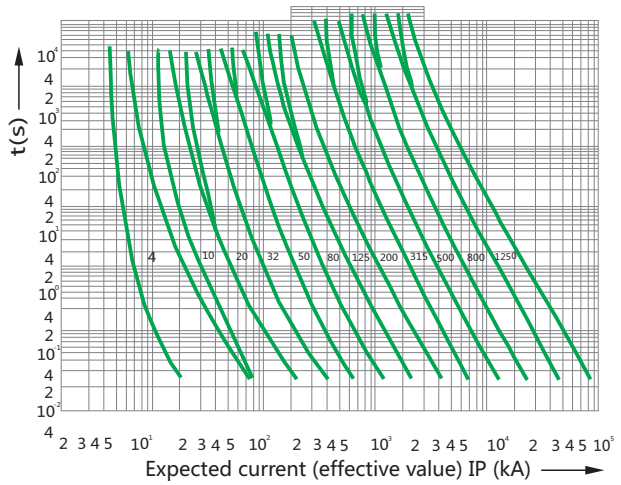

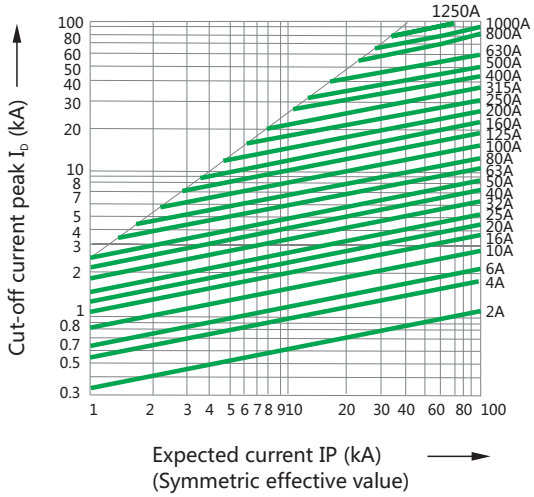



SAK Terminal Blocks

1. General

SAK series is applicable to power and control circuits as terminal connection with rated voltage not more than 690 V (660V) and rated cross-sectional area of 2.5~70mm^2.
Standard: GB/T 14048.7 IEC 60947-7-1

SAK-2.5



SAK-20RD



SAK-4



SAK-6



SAK-10



SAK-16



SAK-35



SAK-70



«Электро-Профи» - www.ep.ru

2. Overall and mounting dimensions

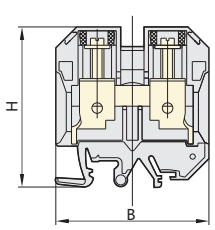



Note: boundary dimension is the same with JXB series of terminal blocks.

NO.	Product name	Specification	Rated connectivity (mm^2)
1	Terminal block	SAK-2.5	1~2.5
2	Terminal block	SAK-4	1.5~4
3	Terminal block	SAK-6	2.5~6
4	Terminal block	SAK-10	4~10
5	Terminal block	SAK-16	6~16
6	Terminal block	SAK-35	16~35
7	Terminal block	SAK-70	25~70
8	Fuse terminal	SAK-20RD	2.5~4
9	Fasteners	EW-35	
10	Marked block	SCHT-5	Thick19
11	Baffle plate	AP-(4~10)	Thick1.7
12	Baffle plate	AP-2.5	Thick1.7
13	Baffle plate	AP-16	Thick1.8
14	Baffle plate	AP-35	Thick1.9
15	Baffle plate	AP-70	Thick2
16	Central shorted pieces	2.5, 4, 6, 10, 16, 35, 70	
17	marked number	DEK 5(1.....10)	

3. Ordering information

3.1 When ordering, you shall indicate product type, wiring area or current, category and quantity;

3.2 Conventional terminal block consists of 10 pieces to a line.

3.3 Other special requirements shall be indicated.

3.4 Ordering example: SAK-2.5/10 5 pieces
Mean: Order 5 pieces of terminal blocks (product type: SAK, wiring area: 2.5 mm^2 and category: general type)

«Электро-Профи» - www.ep.ru



JXB Terminal Blocks

1. General

JXB series is applicable to power and control circuits as terminal connection with rated voltage not more than 690 V (660V) and rated cross-sectional area of 2.5~70mm^2. Standard: GB/T 14048.7 IEC 60947-7-1

JXB-2.5



JXB-20RD



JXB-4



JXB-4S



JXB-6



JXB-10



JXB-16



JXB-35



JXB-70



«Электро-Профи» - www.ep.ru

2. Overall and mounting dimensions

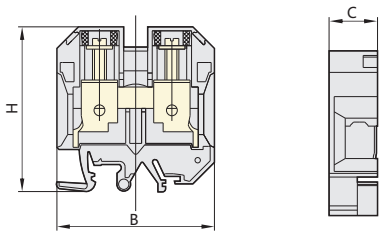

NO.	Product type	Boundary dimension(mm)			Type of mounting rail
		B	C	H	
1	JXB-2.5	42	6.1	40	TH35/G32
2	JXB-4	42	6.6	45.8	TH35/G32
3	JXB-4S	56	6.3	56	TH35/G32
4	JXB-20RD	59.5	8	41.5	TH35/G32
5	JXB-6	42	8	45.8	TH35/G32
6	JXB-10	42	10.1	45.8	TH35/G32
7	JXB-16	52	12.1	51.7	TH35/G32
8	JXB-35	59	18.1	62.5	TH35/G32
9	JXB-70	76.5	22.1	79	TH35/G32
10	EW35(GD35, fasteners)	46	8	31	

3. Ordering information

3.1 When ordering, you shall indicate product type, wiring area or current, category and quantity;

3.2 Conventional terminal block consists of 10 pieces to a line.

3.3 Other special requirements shall be indicated.

3.4 Ordering example: JXB-2.5/10 5 pieces
Mean: Order 5 pieces of terminal blocks (product type: JXB, wiring area: 2.5 mm^2 and category: general type).

«Электро-Профи» - www.ep.ru



JCUK Terminal Blocks

1. General

JCUK series is applicable to circuit as wire connection with rated voltage not more than 690 V (660V) and rated cross-sectional area of 150mm^2.
Standard: GB/T 14048.7 IEC 60947-7-1.

JCUK-2.5N



JCUK-35N



JCUK-50H



JCUK-150H



JCUK-95H



JCUK-5N



JCUK-6N



JCUK-10RD



JCUK-3N



JCUK/DK4



JCUK-5RD



JCUK/K5



JCUK-5JD



JCUK-10JD



JCUK-16JD



JCUK-35JD



JCUK/S



JCUK-10N



JCUK-16N



«Электро-Профи» - www.ep.ru

2. Overall and mounting dimensions

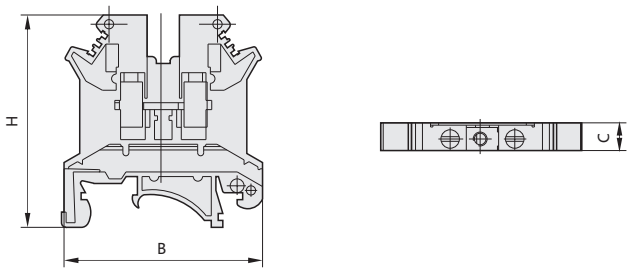

NO.	Product type	Boundary dimension(mm)			Type of mounting rail	Remark
		B	C	H		
1	JCUK-2.5N	43	6.2	41	TH35/G32	
2	JCUK-3N	43	5.2	46	TH35/G32	
3	JCUK-5N	43	6.3	46	TH35/G32	
4	JCUK-6N	43	8.2	46.5	TH35/G32	
5	JCUK-10N	43	10.2	46.5	TH35/G32	
6	JCUK-16N	43.5	12.2	51.5	TH35/G32	
7	JCUK-35N	51	15.5	61.5	TH35/G32	
8	JCUK-50H	76.5	20.5	76.5	TH35/G32	
9	JCUK-95H	89	25.5	90.5	TH35/G32	
10	JCUK-150H	106	31.3	112.5	TH35/G32	
11	JCUK/S	73	8.3	51	TH35/G32	
12	JCUK/K5	57	8.7	61.5	TH35/G32	
13	JCUK/DK4	64	6.2	46.5	TH35/G32	
14	JCUK-5JD	43	6.5	45.5	TH35/G32	
15	JCUK-10JD	43	10.5	45.5	TH35/G32	
16	JCUK-16JD	43	12.4	52.5	TH35/G32	
17	JCUK-35JD	51	15.4	61.5	TH35/G32	
18	JCUK-5RD	73	8.5	57	TH35/G32	Size of fuse link 5X25,rated current 6.3A
19	JCUK-10RD	63	12.5	56.5	TH35/G32	Size of fuse link 5X20,rated current 10A
20	E/UK(fastener)				TH35/G32	
21	JCUK-BJ(marked number)	1~10				
22	D/UK4/10(3N-16N baffle plate, JUCK-2.5N baffle plate)					

3. Ordering information

3.1 When ordering, you shall indicate product type, wiring area or current, category, and quantity;

3.2 Conventional terminal block consists of 10 pieces to a line.

3.3 Other special requirements shall be indicated.

3.4 Ordering example: JCUK-2.5N/10 5 pieces
Mean: Product number: JCUK, wiring area: 2.5mm^2, category: general type and total quantity: 5

«Электро-Профи» - www.ep.ru



TB Terminal Blocks

1. General

TB series is applicable to circuit with alternating current of 50Hz (60Hz), rated voltage not more than 600V and rated current not more than 100A for connection of wire. Standard: GB/T 14048.7 IEC 60947-7-1.

TB-6003



TB-6004



TB-10003



TB-10004



TB-1503



TB-1504



TB-1506



TB-2503



TB-2504



TB-2506



TB-4503



TB-4504



TB-4505



TB-4506



TB-1510



«Электро-Профи» - www.ep.ru

2. Overall and mounting dimensions

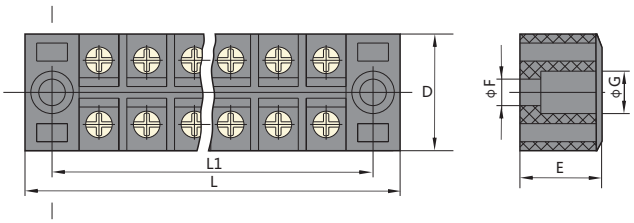

No.	Product type	Rated Current	Group count	Boundary dimension(mm)						connecting screw
				L	L1	D	E	F	G	
1	TB-1503	15A	3	45.5	35	22.2	18	4.2	7	M3
2	TB-1504	15A	4	54.3	44	22.2	18	4.2	7	M3
3	TB-1506	15A	6	72.5	62	22.2	18	4.2	7	M3
4	TB-1512	15A	12	126.2	115	22.2	18	4.2	7	M3
5	TB-1510	15A	10	107.5	97	22.5	18	4.2	7	M3
6	TB-2503	25A	3	55.5	44.6	30.5	20	4.2	7	M4
7	TB-2504	25A	4	67.5	56.5	30.5	20	4.2	7	M4
8	TB-2506	25A	6	92	81	30.5	20	4.2	7	M4
9	TB-2512	25A	12	163.8	152.6	30.5	20	4.2	7	M4
10	TB-4503	45A	3	70.5	59.2	38	24	5	7.2	M5
11	TB-4504	45A	4	86	75.6	38	24	5	7.2	M5
12	TB-4505	45A	5	103	92.5	38	24	5	7.2	M5
13	TB-4506	45A	6	119.5	109	38	24	5	7.2	M5
14	TB-4512	45A	12	220.5	209.5	38	24	5	7.2	M5
15	TB-6003	60A	3	75	63	38	30.5	5	7.2	M6
16	TB-6004	60A	4	93	81	38	30.5	5	7.2	M6
17	TB-10003	100A	3	86.5	75	43.5	34.5	5	7.2	M6
18	TB-10004	100A	4	108.5	97	43.5	34.5	5	7.2	M6

3. Ordering information

3.1 Pay attention to type, connection area or current, classification and quantity of products when ordering.

3.2 Regular terminal block shall be formed with sole block.

3.3 Other special requirements shall be noted.

3.4 Ordering example: TB-10003 5
Means ordering model is TB, rated current is 100A, and has 3 groups and quantity is 5.

«Электро-Профи» - www.ep.ru



TC Terminal Blocks

1. General

TC series is applicable to circuit with alternating current of 50Hz (60Hz), rated voltage not more than 600V and rated current not more than 600A for connection of wire. Standard: GB/T 14048.7 IEC 60947-7-1.

TC-1003



TC-1503



TC-1504



TC-6003



TC-2003



TC-3003



TC-3004



TC-4004



«Электро-Профи» - www.ep.ru

2. Overall and mounting dimensions

Boundary and installed dimension of TC series with three groups

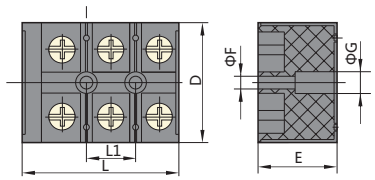

Boundary and installed dimension of TC series with four groups

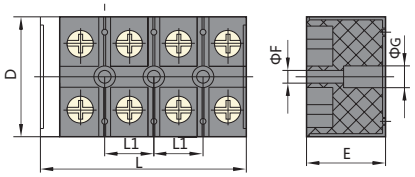

No.	Product type	Rated Current	Group count	Boundary dimension(mm)						connecting screw
				L	L1	D	E	F	G	
1	TC-603	60A	3	86	28.5	43	38	5.2	9.6	M6
2	TC-604	60A	4	114.5	28.5	43	38	5.2	9.6	M6
3	TC-1003	100A	3	103	34	55	42	5.2	9.6	M6
4	TC-1004	100A	4	136	34	55	42	5.2	9.6	M6
5	TC-1503	150A	3	115.3	38.5	66	46	6.3	11	M8
6	TC-1504	150A	4	153.5	38.5	66	46	6.3	11	M8
7	TC-2003	200A	3	132	44	72	51	7.9	11.2	M8
8	TC-2004	200A	4	176.5	44	72	51	7.9	11.2	M8
9	TC-3003	300A	3	165.5	55	90	58	7.9	11.2	M10
10	TC-3004	300A	4	219.5	55	90	58	7.9	11.2	M10
11	TC-4003	400A	3	165.5	55	90	60	7.9	11.2	M10
12	TC-4004	400A	4	219.5	55	90	60	7.9	11.2	M10
13	TC-6003	600A	3	206.5	68.5	100.5	80	8.5	12	M12
14	TC-6004	600A	4	275.5	68.5	100.5	80	8.5	12	M12

3. Ordering information

3.1 Pay attention to type, connection area or current, classification and quantity of products when ordering.

3.2 Regular terminal block shall be formed with sole block.

3.3 Other special requirements shall be noted.

3.4 Ordering example: TC-603 5
Means ordering model is TC, rated current is 60A, and has 3 groups and quantity is 5.

K

«Электро-Профи» - www.ep.ru

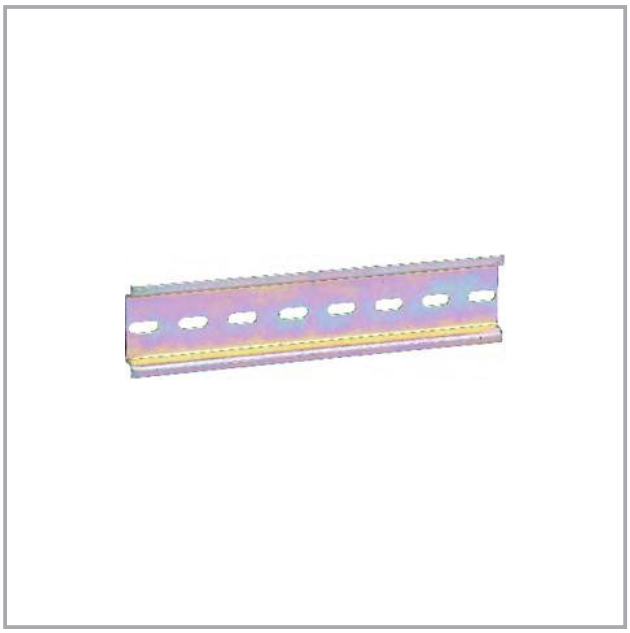

TH35-7.5(C45) Rail



LW32
Universal Change-over Switch

1. General

Universal change-over switch of LW32 series is mainly applicable to circuit with alternating current of 50Hz~60Hz, rated operational voltage not more than 380V and DC voltage not more than 220V for remote control or transformation of power distribution equipment, it can also used as change-over switch of various electrical measuring meter and servo moto. Standard: GB 14048.5 IEC 60947-5-1.

2. Type designation

2.1 Type of master control

LW32-□/ □ □ /□

- Pitch number of contact system
- No. of wiring diagram
- Characteristics code (see Table 3)
- Agreed thermal current(20A)
- Design sequence No.
- Universal change-over switch

2.2 Change-over switch for direct control motor

LW32- □/□ □/□

- Pitch number of contact system
- Application code (see Table 1)
- Rated power of controlled three-phase AC motor
- Agreed thermal current(20A)
- Design sequence No.
- Universal change-over switch

Note: Switch with application code of Q, S and N shall be transformed with 60°and with application code of SN shall be transformed with 45°.

K

2.3 Technical Parameters

Rated operating voltage: AC380V, DC220V

Rated operating current: AC-15:380V, 2.6A

DC-13:220V,0.27A

Conventional heating current: 20A

Rated insulation voltage: 550V

Table 1

Use code	Use
Q	Direct starting
N	Reversible conversion
S	Two-speed motor shifting
SN	Two-speed motor shifting, reversible

3. Others

3.1 Category

3.1.1 There are tow kinds, including direct control of the motor and master control according to applications;

3.1.2 There are three types including location, self-rehabilitation and location self-rehabilitation according to operations;

3.1.3 For sessions of the contact system , locations are 1-12 section, self-rehabilitation are 1-3 section and direct control of motors are 1-6 section;

3.1.4 Three types according to panel shape and size (see Table 2).

Table 2

Large square panel		Small rectangular panel		Small square panel	
Length	Width	Length	Width	Length	Width
65	65	60	48	50	50

3.2 Combination classification based on operation modes and positions of actuator (see Table 4)

Table 3

Use category	Feature code	Self-rehabilitation type			
Actuator position	A	0° 30°		0° 45°	
	B	30° 0° 30°		45° 0° 45°	
Location type	C	0° 90°	0° 30°	0° 45°	0°
	D	90° 0° 90°	30° 0° 30°	45° 0° 45°	60° 0° 60°
	E	90° 0° 90° 180°	30° 0° 30° 60°	45° 0° 45° 90°	60° 30° 30° 60°
	F	60° 30° 0° 30° 60°		90° 45° 0° 45° 90°	150° 90° 30° 30° 90° 150°
	G	60° 30° 0° 30° 60° 90°		90° 45° 0° 45° 90° 135°	90° 30° 30° 90° 150°
	H	90° 60° 30° 0° 30° 60° 90°		135° 90° 45° 0° 45° 90° 135°	
	I	90° 60° 30° 0° 30° 60° 90° 120°		135° 90° 45° 0° 45° 90° 135° 180°	
	J	120° 90° 60° 30° 0° 30° 60° 90° 120°			
	K	120° 90° 60° 30° 0° 30° 60° 90° 120° 150°			
	L	150° 120° 90° 60° 30° 0° 30° 60° 90° 120° 150°			
	M	150° 120° 90° 60° 30° 0° 30° 60° 90° 120° 150° 180°			
	N			45° 45°	30° 30°
Location	Z	30° 0° 60°		135° 90° 0° 45°	
				90° 0° 45°	

«Электро-Профи» - www.ep.ru

3.3 Handle connections are divided into the following two types.



R Type



I Type

Wiring diagram on commonly used control switch for voltage and current measurement converter box of LW32 series
Phase voltage phase-change switch

	0	UAN	UBN	UCN	UCN
LW32-20/YH1/2	**0°**	**90°**	**180°**	**270°**	**270°**
A 1-2 B 3-4 C 5-6 N 7-8 V		×			
			×		
				×	×
		×	×	×	×

	UAN	UBN	UCN
LW32-20/YH3/2	**90°**	**0°**	**90°**
A 1-2 B 3-4 C 5-6 N 7-8 V	×		
		×	
			×
	×	×	×

Line voltage phase-change switch

		UAB	UBC	UCA
LW32-20/YH4/2		**90°**	**0°**	**90°**
B 1-2 C 3-4 A 5-6 7-8 V	1-2	×	×	
	3-4		×	×
	5-6			×
	7-8	×		

	0	UAB	UBC	UCA
LW32-20/YH2/3	**0°**	**90°**	**180°**	**270°**
B 1-2 A 5-6 7-8 C 11-12 V	1-2	×	×	
	3-4			
	5-6			×
	7-8	×		
	9-10			
	11-12		×	×

	0	UAB	UBC	UCA
LW32-20/YH3/3	**0°**	**90°**	**180°**	**270°**
A 1-2 3-4 B 5-6 7-8 C 9-10 11-12 V	1-2	×		
	3-4			×
	5-6		×	
	7-8	×		
	9-10			×
	11-12		×	

K

«Электро-Профи» - www.ep.ru

Phase-change switch for three-phase line voltage and three-phase voltage

		UCA	UBC	UAB	0	UAN	UBN	UCN
LW32-20/YH5/4		**135°**	**90°**	**45°**	**0°**	**45°**	**90°**	**135°**
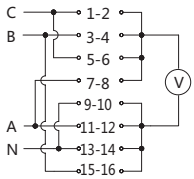	1-2		×					×
	3-4			×			×	
	5-6	×						
	7-8					×		
	9-10					×		×
	11-12	×		×				
	13-14						×	
	15-16		×					

		UCA	UBC	UAB	0	UAN	UBN	UCN
LW32-20/YH5/3		**135°**	**90°**	**45°**	**0°**	**45°**	**90°**	**135°**
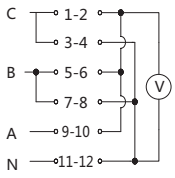	1-2		×					×
	3-4	×						
	5-6						×	
	7-8		×	×				
	9-10	×		×		×		
	11-12					×	×	×

Change-over switch for current measurement

		0	IA	IB	IC
LW32-20/LH1/2		**0°**	**90°**	**180°**	**270°**
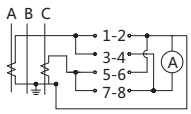	1-2	×			×
	3-4		×	×	
	5-6	×	×		
	7-8			×	×

		0	IA	IB	IC
LW32-20/LH2/4		**0°**	**90°**	**180°**	**270°**
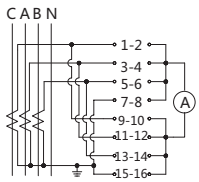	1-2	×	×	×	
	3-4	×		×	×
	5-6	×	×		×
	7-8		×	×	×
	9-10				×
	11-12		×		
	13-14			×	
	15-16	×			

			IA	IB	IC
LW32-20/LH3/4		**0°**	**90°**	**180°**	**270°**
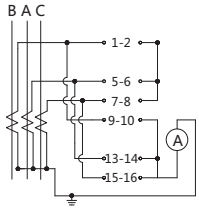	1-2	×	×		×
	3-4				
	5-6	×		×	×
	7-8	×	×	×	
	9-10			×	
	11-12				
	13-14		×		
	15-16				×

«Электро-Профи» - www.ep.ru

Direct start-up and breaking during operation

			1
LW32-20/Q1/2		**0°**	**60°**
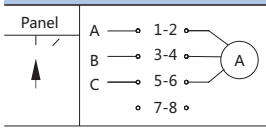	1-2		×
	3-4		×
	5-6		×
	7-8		

Forward and reverse direct start-up, breaking during operation

		1	0	2
LW32-20/N1/3		**60°**	**0°**	**60°**
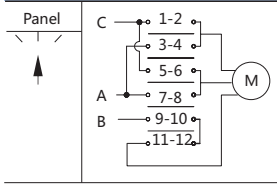	1-2			×
	3-4	×		
	5-6	×		
	7-8			×
	9-10	×		×
	11-12	×		×

Variable-speed switch of two-speed motor

		1	0	2
LW32-20/S1/4		**60°**	**0°**	**60°**
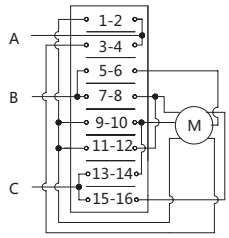	1-2	×		
	3-4			×
	5-6			×
	7-8	×		
	9-10			×
	11-12			×
	13-14	×		
	15-16			×

4. Overall and mounting dimensions

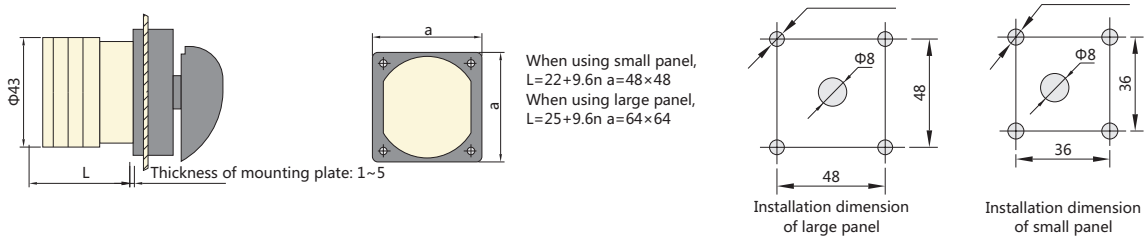

K

«Электро-Профи» - www.ep.ru

5. Ordering information

When ordering, the user shall use complete model of switch. For example: Order universal change-over switch LW32, type of wiring diagram is 100 sets. Order code: LW32-20/D303/2 100 sets.

Wiring diagram No.	D303		
Conversion angle	60°	0°	60°
1-2	×		×
3-4	×		
5-6	×		×
7-8			×

«Электро-Профи» - www.ep.ru



HZ10 Combination Switch

1.General

HZ10 series of combination switch is applicable to frequent manual does not get through or circuit breaking, power or load connection & conversion, circuit measurement and small capacity motor control in circuit with AC voltage not more than 380V/50Hz~60Hz and DC voltage not more than 220V.
Standard: GB 14048.3 IEC 60947-3.

2. Type designation

HZ10- □ □ □/□

- Number of poles
- Code of enclosure type: Without enclosure; no indication; White plastic enclosure; code: "M"
- Code of application type
- Conventional thermal current
- Design sequence No.
- Combination switch

3. Technical data

Type	Ith (A)	Ui (V)	AC-22A		DC-21A		AC-3	
			Ue(V)	Ie(A)	Ue(V)	Ie(A)	Ue(V)	Ie(A)
HZ10-10	10			10		10	380	3
HZ10-25	25			25		25	380	6.3
HZ10-60	60			60		60		
HZ10-60/E119	60	380	380	60	220	60		
HZ10-100	100			100		100		
HZ10-100/E119	100			100		100		

Note: Ie of a single-pole switch will reduce to 60% of the above data when AC voltage is 380V.

4. Others

4.1 Category
4.1.1 According to applications: single-power switch; two-power supply or two-circuit reversing switch (code: P);
Three-circuit reversing switch (code: S);
Four-circuit reversing switch (code: G);
4.1.2 According to installation type: front connection type and rear connection type;
4.1.3. According to poles: monopolar, bipolar , tripolar , quadrupole;
4.1.4 According to sessions: One-section, two-section, three-section, four-section, five-section and six-section

Note: Only 3-pole or less, can be made for three-circuit reversing switch and four-circuit reversing switch.

«Электро-Профи» - www.ep.ru

Number of poles	Single-power switch	Dual power switch (P)	Three-circuit change-over switch (S)	Four-circuit change-over switch (G)
Monopolar	C1 — L1	C1 — 1L1, 2L1	C1 — 1L1, 2L1, 3L1	C1 — 1L1, 2L1, 3L1, 4L1
Bipolar	C2 — L2	C2 — 1L2, 2L2	C2 — 1L2, 2L2, 3L2	C2 — 1L2, 2L2, 3L2, 4L2
Tripolar	C3 — L3	C3 — 1L3, 2L3	C3 — 1L3, 2L3, 3L3	C3 — 1L3, 2L3, 3L3, 4L3
Quadrupole	C4 — L4	C4 — 1L4, 2L4	C4 — 1L4, 2L4, 3L4	C4 — 1L4, 2L4, 3L4, 4L4

5. Overall and mounting dimensions

See Fig.1 and Fig.4 for outline and installation dimension of HZ10

Fig.1 Front-plate installation of the whole series

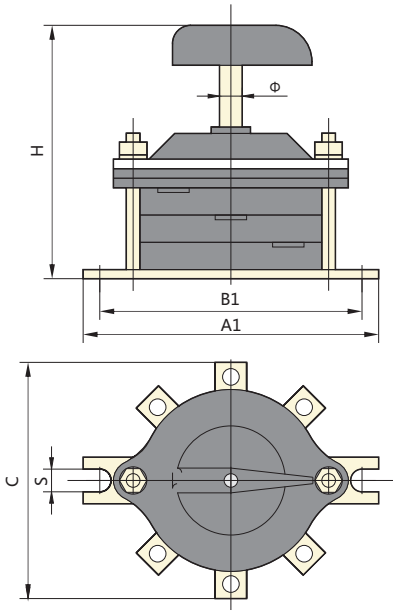

Fig.2 Rear-plate installation of 10A, 25A, 40A

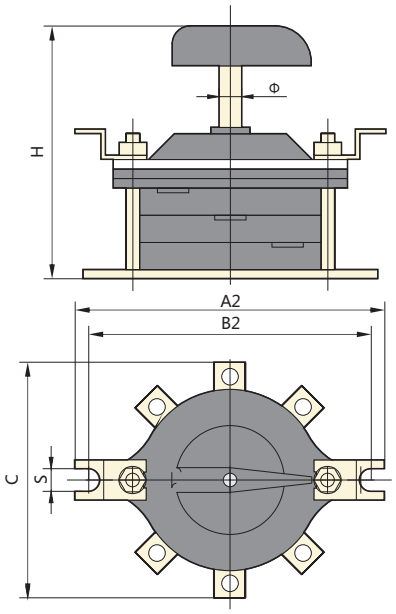

«Электро-Профи» - www.ep.ru

Fig.3 Rear-plate installation type during 60A, 100A

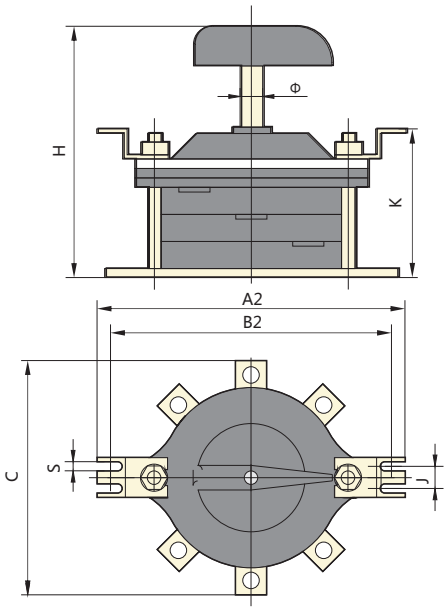

Fig.4 Enclosure diagram and mounting hole size

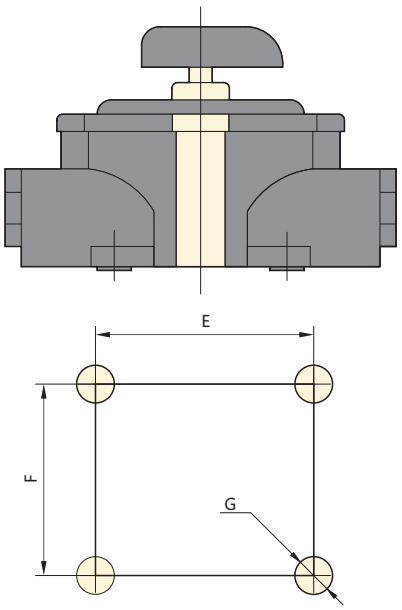

List of outline and installation dimension of unprotected enclosure switch:

Ith (A)	Boundary dimension									Remark
	A1	A2	H	Φ	C	B1	B2	S	J	K	
10	65	87	60+6n	6	58	55	75	5	-	29+6n	"n" refers pole number/ welding machine switch n=6 "G.S" refers pole number/welding machine switch n=2n"
25	100	117	78+10n	8	92	90	101	6	-	38+10n	
60	142	153	102+15n	9	132	128	139	7	13	47+15n	
100	142	153	104+17n	9	132	128	139	7	13	49+17n	

Boundary dimension and hole size of protective enclosure switch:

Enclosure type	Ith (A)	Wiring channel	Maximum boundary dimension			Installation dimension		
			Length	Width	Height	E	F	G
White enclosure	10	Two-way	120	102	88	60	80	Φ 7.9
		Four-way	136	102	95			
	25	Two-way	165	142	130	100	100	Φ 7
		Four-way	190	142	132			
	60(100)	Two-way	220	195	169	126	126	Φ 10
		Four-way	250	195	169			

6. Ordering information

When ordering, the user shall use complete model of switch.
For example: Order combination switch HZ10, two-circuit reversing switch, bipolar, conventional thermal current: 25A, 100 sets Order code: HZP10—25P/2 100 sets.

«Электро-Профи» - www.ep.ru



YBLX-ME
Travel Switch

1. General

YBLX-ME series of travel switch is applicable to electric circuit with voltage not more than AC-15 380V,50Hz/60Hz or DC-13 Ue 220V and current not more than AC-15 Ie 0.8A or DC-13 Ie 0.16A as travel control, direction of motion or speed change of movement mechanism, automatic control of machine tool, limit action & travel or procedure control of movement mechanism.

Standard: GB/T 14048.5,IEC60947-5-1,CCC China Compulsory Product Certification

2. Type designation

YB LX-ME/□

- Operation modes (see Table 2)
- Design sequence No.
- Travel switch
- Improved products

3. Technical data

Contact type

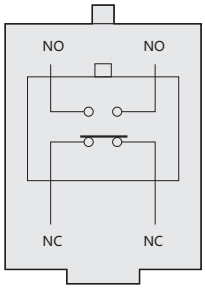

Table 1

Ingress protection	IP62
Operation frequency	20 t/min
Contact resistance	≤15mΩ (initial value)
Ambient temperature	-5℃~+40℃
Relative humidity	≤95%
Rated voltage	AC-15 380V; DC-13 220V
Rated control current	AC-15 0.8A; DC-13 0.16A
Installation category	Ⅱ
Pollution degree	class3
Insulation voltage Ui	415V
Rated impulse withstand voltage Uimp	2.5KV

Table 2

Type (use the recommended type)	Operating modes	Alternative models (stop service)		
YBLX-ME/8104	Roller rotating arm	YBLX-AZ/8104	YBLX-TZ/8104	
YBLX-ME/8107	Adjustable rotating rod	YBLX-AZ/8107	YBLX-TZ/8107	
YBLX-ME/8108	Adjustable roller rotating rod	YBLX-AZ/8108	YBLX-TZ/8108	
YBLX-ME/8111	Direct pressure plunger type	YBLX-AZ/8111	YBLX-TZ/8111	
YBLX-ME/8112	Direct-pressure plunger horizontal roller	YBLX-AZ/8112	YBLX-TZ/8112	
YBLX-ME/8122	Direct-pressure plunger horizontal roller	YBLX-AZ/8122	YBLX-TZ/8122	
YBLX-ME/8166	Universal type Ⅰ	YBLX-AZ/8166	YBLX-TZ/8166	
YBLX-ME/8169	Universal type Ⅱ	YBLX-AZ/8169	YBLX-TZ/8169	
YBLX-ME/8101	Universal type Ⅲ	YBLX-AZ/8101 YBLX-AZ/9101	YBLX-TZ/8101 YBLX-TZ/8101	YBLX-ME/9101

«Электро-Профи» - www.ep.ru

Table 3

Type	Operating modes	Maximum operating force (max OF)	Maximum operating range (max PT)	Minimum overtravel (min OT)	Total travel (TT)
YBLX-ME/8104	Roller rotating arm	12N	35°	70°	105°
YBLX-ME/8107	Adjustable rotating rod	12N	35°	70°	105°
YBLX-ME/8108	Adjustable roller rotating rod	12N	35°	70°	105°
YBLX-ME/8111	Direct pressure plunger type	15N	5mm	2mm	7mm
YBLX-ME/8112	Direct-pressure plunger horizontal roller	20N	5mm	2mm	7mm
YBLX-ME/8122	Direct-pressure plunger horizontal roller	20N	5mm	2mm	7mm
YBLX-ME/8166	Universal type I	12N	35°	-	-
YBLX-ME/8169	Universal type I	12N	35°	-	-
YBLX-ME/8101	Universal type IIII	12N	35°	-	-

4. Overall and mounting dimensions

YBLX-ME/8104

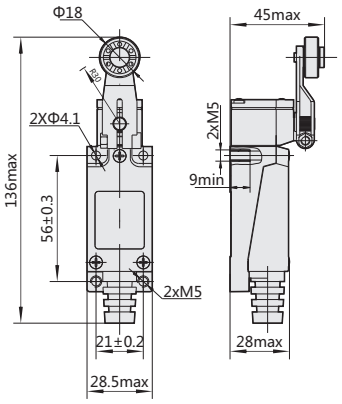

YBLX-ME/8108

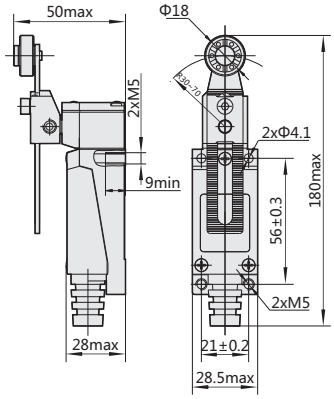

YBLX-ME/8107

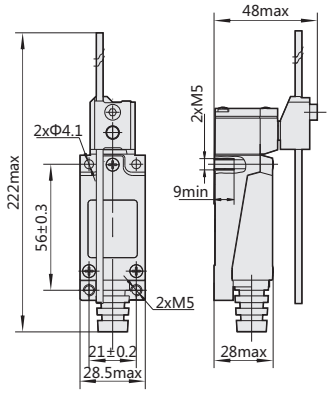

YBLX-ME/8111

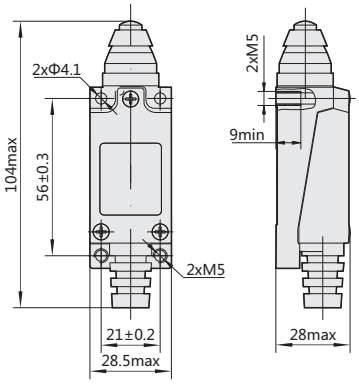

K

«Электро-Профи» - www.ep.ru

YBLX-ME/8112

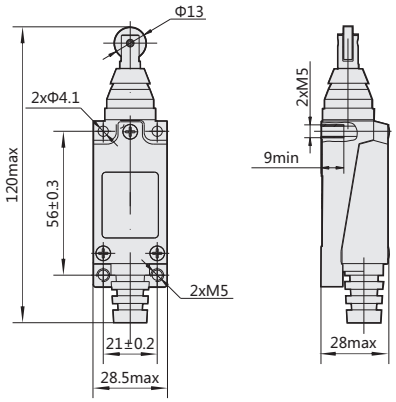

YBLX-ME/8166

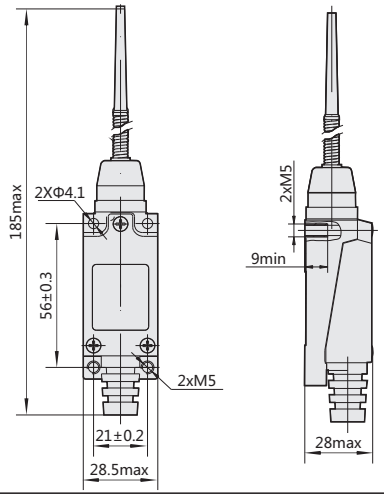

YBLX-ME/8101

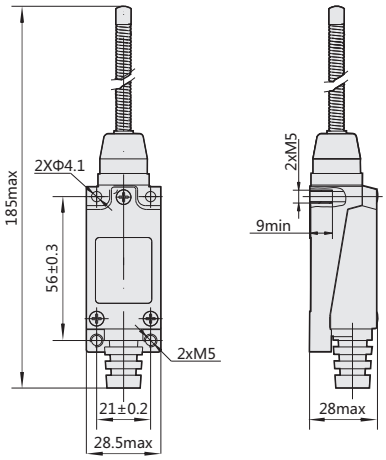

YBLX-ME/8169

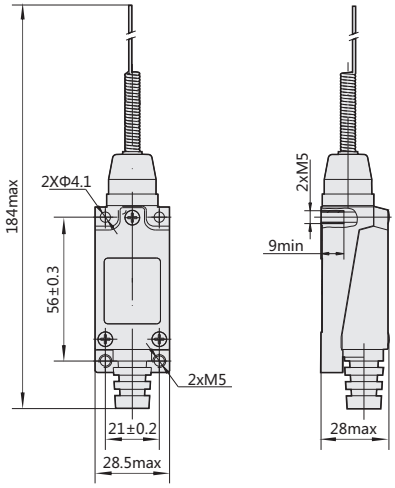

YBLX-ME/8122

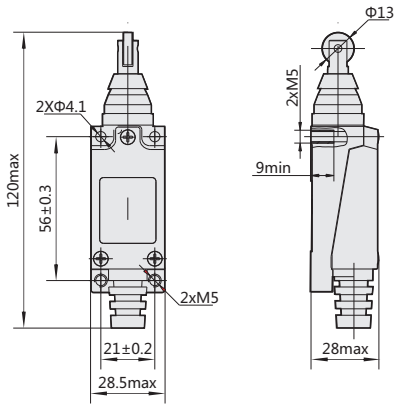

5. Ordering information

When ordering, the user shall specify the switch type, name and quantity.
For example: YBLX-ME/8169 travel switch 100 pieces
User note:
YBLX-ME/8104.8107.8108 this three kinds of specifications products.
Their operating mechanism is torsion spring energy storage.
This kind of product does not fit to the rotating arm stay for a long time in working condition.
Beware of torsion spring outlet fatigue fracture and other undesirable phenomena.

«Электро-Профи» - www.ep.ru



YBLX-WL
Travel Switch

1.General

YBLX-WL travel switch (hereinafter referred to as switch) is mainly applicable to electrical circuit with AC-15 380V or DC-13 220V, 50Hz/60Hz for travel control, direction of motion or speed change of movement mechanism, automatic control of machine tool, limit action & travel or procedure control of movement mechanism.

Standard: GB/T 14048.5 IEC60947-5-1.

2. Type designation

YB LX-WL/□/□

- Design sequence No.,S2 indicate pin type of spring rotating rod (NL)
- Operation modes (see Table 1)
- Design sequence No.
- Travel switch
- Product category code

Table 1

Type (use the recommended type)	Operating modes	Alternative models (stop service)		
YBLX-WL/CA2	Single-roller rotating arm	YBLX-WL/01CA2	YBLX-WL/ACA2、YBLX-WL/CA12/2	TZ-5104
YBLX-WL/CA12	Adjustable single-roller rotating arm	YBLX-WL/01CA12	YBLX-WL/ACA12	TZ-5108
YBLX-WL/D	Pressure-plunger type	YBLX-WL/01D	YBLX-WL/AD	TZ-5101
YBLX-WL/D2	Plunger-roller type	YBLX-WL/01D2	YBLX-WL/AD2	TZ-5102
YBLX-WL/NJ	Universal type I	YBLX-WL/01NJ	YBLX-WL/ANJ	TZ-5106
YBLX-WL/NJ/S2	Universal type II	YBLX-WL/01NJ/S2	YBLX-WL/ANJ/S2	TZ-5169
YBLX-WL/CL	Adjustable straight-shaft type	YBLX-WL/01CL	YBLX-WL/ACL	TZ-5107

3. Technical data

Table 2

Ingress protection	IP52
Operation frequency	20t/min
Contact resistance	200mΩ (initial value)
Ambient temperature	-5℃~+40℃
Relative humidity	≤95%
Rated voltage	AC-15 380V; DC-13 220V
Rated control current	AC-15 0.79A; DC-13 0.15A
Installation category	Ⅱ
Pollution degree	class3
Insulation voltage Ui	415V
Rated impulse withstand voltage Uimp	4KV

K

«Электро-Профи» - www.ep.ru

Contact type

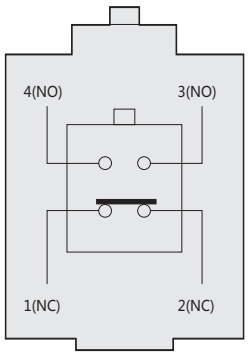

Table 1

Type \ Operating characteristic	Operating force	Operation range	Overtravel
YBLX-WL/CL	≤20N	≤45°	≥15°
YBLX-WL/CA2	≤20N	≤45°	≥15°
YBLX-WL/CA12	≤20N	≤45°	≥15°
YBLX-WL/D	≤30N	≤7.5mm	≥2mm
YBLX-WL/D2	≤30N	≤7.5mm	≥2mm
YBLX-WL/NJ	≤16N	≤45°	-
YBLX-WL/NJ/S2	≤16N	≤45°	-

4. Overall and mounting dimensions

YBLX-WL/CA2

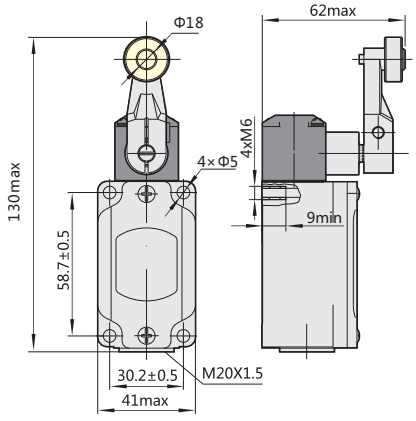

YBLX-WL/CA12

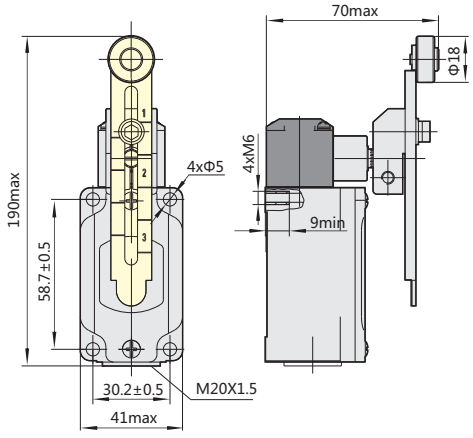

«Электро-Профи» - www.ep.ru

YBLX-WL/D2

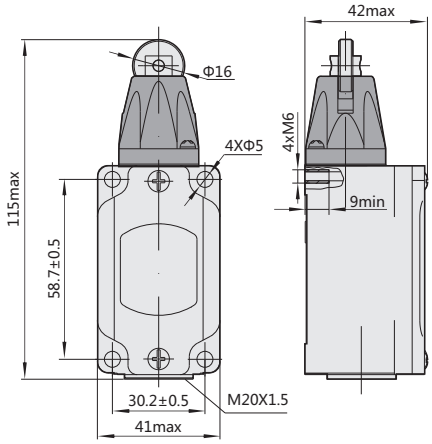

YBLX-WL/D

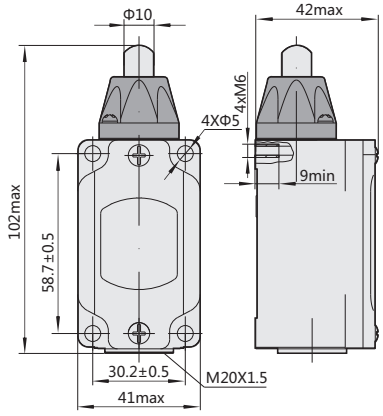

YBLX-WL/NJ

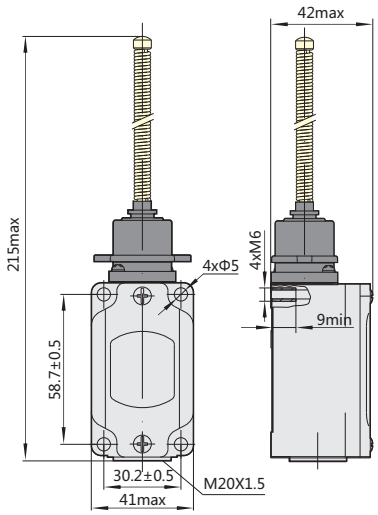

YBLX-WL/NJ/S2

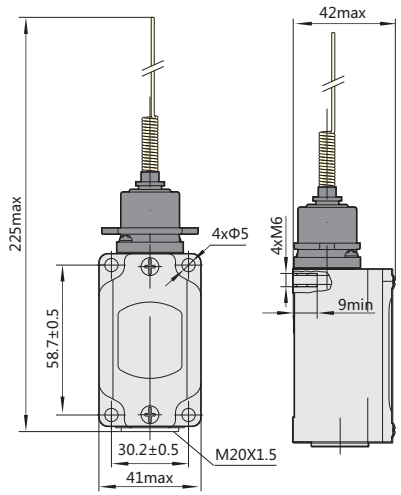

YBLX-WL/CL

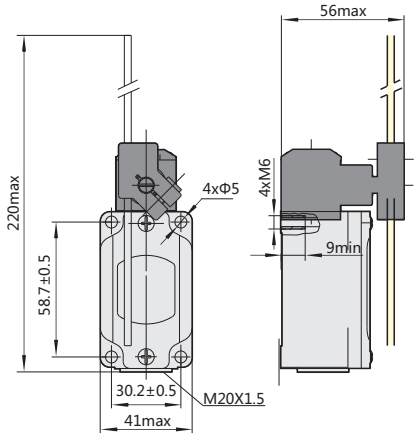

K

5. Ordering information

When ordering, the user shall specify the switch type, name and quantity.
For example: YBLX-WL/CA12 100 pieces
User note:
YBLX-WL/CA2, YBLX-WL/CA12, YBLX-WL/CL restricted by operating mechanism.
It can not apply to the arm action is greater than 90 degree condition.
Beware of the action angle is too large lead to turn arm rotation and other undesirable phenomena.

«Электро-Профи» - www.ep.ru



YBLX-CK Travel Switch

1.General

YBLX-CK series of travel switch is applicable to electric circuit with voltage not more than AC-15 380V,50Hz/60Hz or DC-13 220V, for travel control, direction of motion or speed change of movement mechanism, automatic control of machine tool, limit action & travel or procedure control of movement mechanism.

Ingress protection	IP52
Rated working voltage	AC-15 380V ; DC-13 220V
Rated control current	AC-15 0.8A ; DC-13 0.16A

Contact type

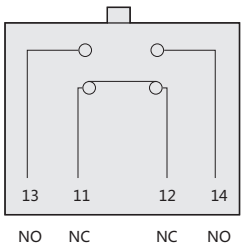

2. Technical data

Type	Mechanical equipment for buildings and public utilities	Food, agriculture, textiles, timber, lumber, industries, machinery	Packing machinery	Machine tool	Assembling machine	Motor handling machinery
YBLX-CK/J	Not commonly used	Not commonly used	Not commonly used	Can be used	The most commonly used	The most commonly used
YBLX-CK/S	Not commonly used	The most commonly used	The most commonly used	Not commonly used	Not commonly used	Not commonly used
YBLX-CK/M	The most commonly used	Can be used	The most commonly used	Can be used	Can be used	The most commonly used
YBLX-CK/P	The most commonly used	The most commonly used	The most commonly used	Not commonly used	The most commonly used	Not commonly used
YBLX-CK/T	The most commonly used	The most commonly used	The most commonly used	Not commonly used	The most commonly used	Not commonly used

Type	Direct-acting	Direct-acting steel roller	Direct-acting plastic roller	Direct-acting plastic roller	Adjustable roller rotating arm	Jib-type round rod	Universal type
YBLX-CK/J	J161	J167		J10511	J10541	J10559	
YBLX-CK/S	S101	S102		S131, 139	S141	S159	
YBLX-CK/M	M110	M102	M121	M115			
YBLX-CK/P	P110	P102	P121	P118	P145	P155	P106 P108
YBLX-CK/T	T110	T102	T121	T118			T106

K

«Электро-Профи» - www.ep.ru

3. Overall and mounting dimensions

YBLX-CK/P 106

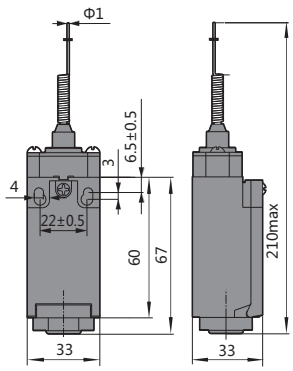

YBLX-CK/J 10511

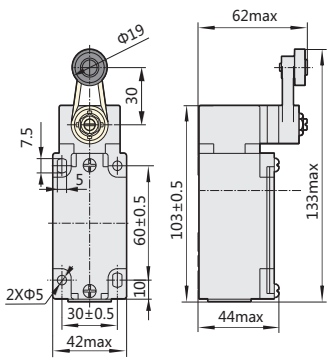

YBLX-CK/J 10541

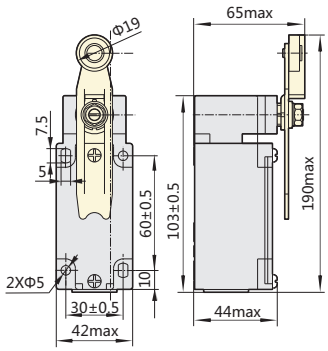

YBLX-CK/P 102

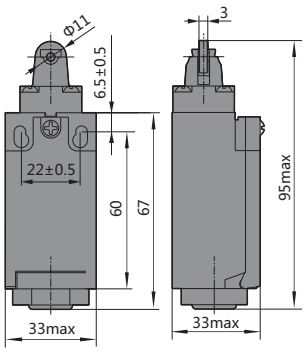

YBLX-CK/M 106

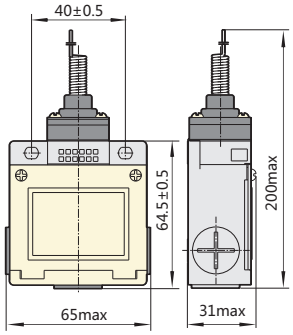

YBLX-CK/T 121

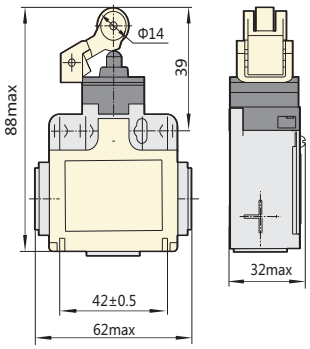

«Электро-Профи» - www.ep.ru

YBLX-CK/M 102

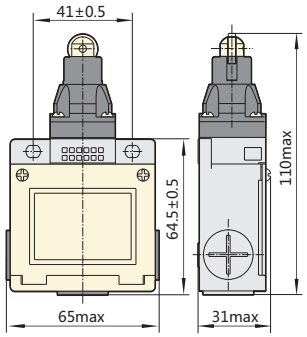

YBLX-CK/M 115

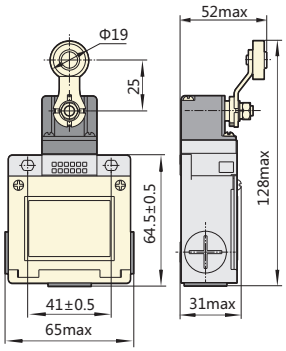

YBLX-CK/M 121

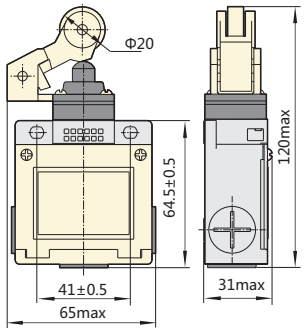

YBLX-CK/P 121

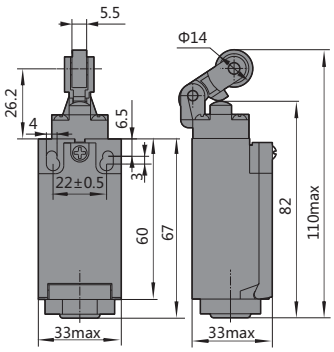

YBLX-CK/P 110

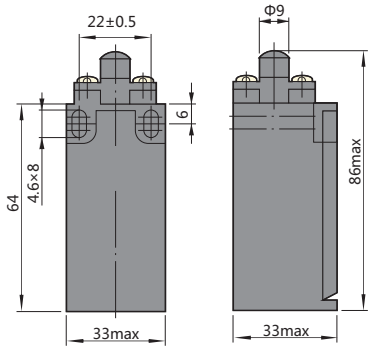

YBLX-CK/J 167

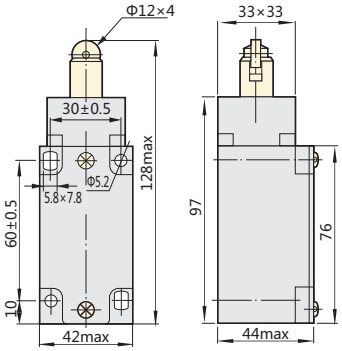

K

YBLX-CK/S 102

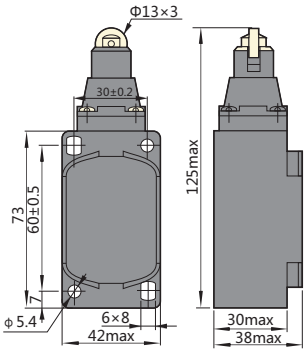

YBLX-CK/M 110

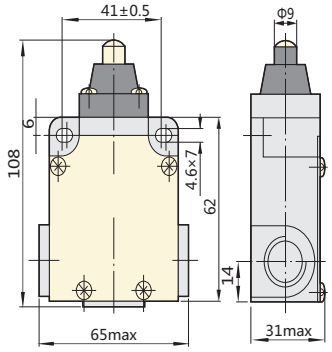

YBLX-CK/T 110

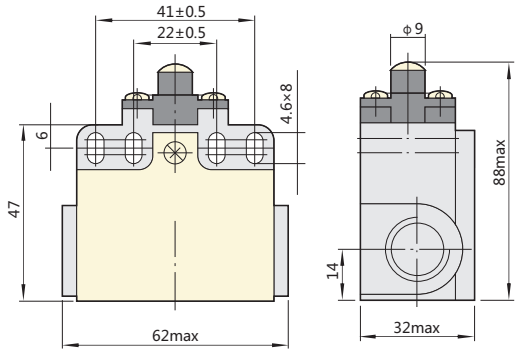

4. Ordering instructions:

The user must specify the model, name and quantity of the switch when ordering.
Eg: 100 YBLX-CK/J10541 Limit switch.
User note:
YBLX-CK/M115, YBLX-CK/J10541, YBLX-CK/P118, YBLX-CK/P145,YBLX-CK/P155,YBLX-CK/S131,YBLX-CK/S141, YBLX-CK/S159,YBLX-CK/T118 restricted by operating mechanism. It can not apply to the arm action is greater than 90 degree condition. Beware of the action angle is too large lead to turn arm rotation and other undesirable phenomena.

«Электро-Профи» - www.ep.ru



YBLX-P1 Travel Switch

1. General

YBLX-P1 series of travel switch is applicable to electric circuit with voltage not more than AC-15 Ue 380V,50Hz/60Hz or DC-13 Ue 220V and current not more than AC-15 Ie 0.8A or DC-13 Ie 0.15A for travel control, direction of motion or speed change of movement mechanism, automatic control of machine tool, limit action & travel or procedure control of movement mechanism. Standard: GB/T 14048.5,IEC60947-5-1,CCC China Compulsory Product Certification.

2. Type designation

YB LX -P 1/ □ □ □

- Operating mode (see Table 3)
- Contact composition, significance of figure code (see Table 2)
- Element and protection type, significance of letter code (see Table 1)
- Design sequence No.
- Ordinary type
- Travel switch
- Improved code

Contact type

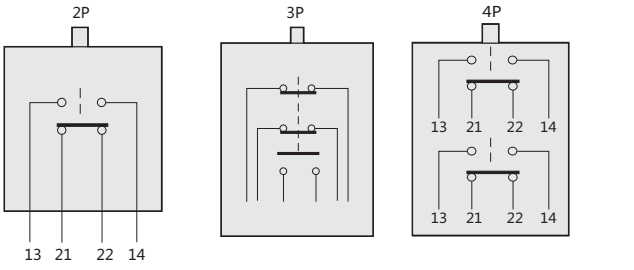

Table 1

020	
100	Bipolar protection travel switch (wide)
120	Bipolar protection travel switch (narrow)
303	Tripolar protection travel switch (wide)
404	Quadrupole protection travel switch (wide)

Table 2

Bipolar switch elements	Tripolar switch element	Quadrupole switch element
A pair of contacts with quick actions, one for normal open and the other for normal close	Common contacts (two for normal open and one for normal close)	Two fast switch elements

Table 3

Type (use recommended type)	Operating mode	Alternative models (stop service)		
YBLX-P1/120/1B	Direct acting	YBLX-P1/120/0B		
YBLX-P1/120/1C	Direct acting with a buffer	YBLX-P1/120/0C		
YBLX-P1/120/1D	Direct acting, single roller	YBLX-P1/120/0D		
YBLX-P1/120/1E	Direct acting and single roller with a buffer	YBLX-P1/120/0E		
YBLX-P1/120/1F	Angle lever, single roller	YBLX-P1/120/0F		
YBLX-P1/120/1G	Adjustable rotating angle, single roller	YBLX-P1/120/1H YBLX-P1/120/0H YBLX-P1/120/0G	YBLX-P1/120/1J YBLX-P1/120/0J	YBLX-P1/120/1K YBLX-P1/120/0K
YBLX-P1/120/1P	Adjustable length of the iron lever with damping	YBLX-P1/120/1V YBLX-P1/120/0V YBLX-P1/120/0P	YBLX-P1/120/1W YBLX-P1/120/0W	YBLX-P1/120/1Q YBLX-P1/120/0Q
YBLX-P1/120/1T	Fork rod and two wheels without automatic reset	YBLX-P1/120/0T		
YBLX-P1/120/1U	Adjustable length of the single lever and single roller	YBLX-P1/120/0U		
YBLX-P1/100/1B	Direct acting	YBLX-P1/100/0B	YBLX-P1/120/0N	YBLX-P1/120/0N
YBLX-P1/100/1C	Direct acting with a buffer	YBLX-P1/100/0C		
YBLX-P1/100/1D	Direct acting, single roller	YBLX-P1/100/0D		
YBLX-P1/100/1E	Direct acting and single roller with a buffer	YBLX-P1/100/0E		

«Электро-Профи» - www.ep.ru

Table 3

Type (use recommended type)	Operating mode	Alternative models (stop service)		
YBLX-P1/100/1F	Angle lever, single roller	YBLX-P1/100/0F		
YBLX-P1/100/1G	Adjustable rotating angle, single roller	YBLX-P1/100/1H YBLX-P1/100/0H YBLX-P1/100/0G	YBLX-P1/100/1J YBLX-P1/100/0J	YBLX-P1/100/1K YBLX-P1/100/0K
YBLX-P1/100/1P	Adjustable length of the iron lever with damping	YBLX-P1/100/1V YBLX-P1/100/0V YBLX-P1/100/0P	YBLX-P1/100/1W YBLX-P1/100/0W	YBLX-P1/100/1Q YBLX-P1/100/0Q
YBLX-P1/100/1T	Fork rod and two wheels without automatic reset	YBLX-P1/100/0T		
YBLX-P1/100/1U	Adjustable length of the single lever and single roller	YBLX-P1/100/0U	YBLX-P1/100/0N	YBLX-P1/100/0N
YBLX-P1/303/1B	Direct acting	YBLX-P1/303/0B		
YBLX-P1/303/1C	Direct acting with a buffer	YBLX-P1/303/0C		
YBLX-P1/303/1D	Direct acting, single roller	YBLX-P1/303/0D		
YBLX-P1/303/1E	Direct acting and single roller with a buffer	YBLX-P1/303/0E		
YBLX-P1/303/1F	Angle lever, single roller	YBLX-P1/303/0F		
YBLX-P1/303/1G	Adjustable rotating angle, single roller	YBLX-P1/303/1H YBLX-P1/303/0H YBLX-P1/303/0G	YBLX-P1/303/1J YBLX-P1/303/0J	YBLX-P1/303/1K YBLX-P1/303/0K
YBLX-P1/303/1P	Adjustable length of the iron lever with damping	YBLX-P1/303/1V YBLX-P1/303/0V YBLX-P1/303/0P	YBLX-P1/303/1W YBLX-P1/303/0W	YBLX-P1/303/1Q YBLX-P1/303/0Q
YBLX-P1/303/1T	Fork rod and two wheels without automatic reset	YBLX-P1/303/0T		
YBLX-P1/303/1U	Adjustable length of the single lever and single roller	YBLX-P1/303/0U		
YBLX-P1/404/1B	Direct acting	YBLX-P1/404/0B		
YBLX-P1/404/1C	Direct acting with a buffer	YBLX-P1/404/0C		
YBLX-P1/404/1D	Direct acting, single roller	YBLX-P1/404/0D		
YBLX-P1/404/1E	Direct acting and single roller with a buffer	YBLX-P1/404/0E		
YBLX-P1/404/1F	Angle lever, single roller	YBLX-P1/404/0F		
YBLX-P1/404/1G	Adjustable rotating angle, single roller	YBLX-P1/404/1H YBLX-P1/404/0H YBLX-P1/404/0G	YBLX-P1/404/1J YBLX-P1/404/0J	YBLX-P1/404/1K YBLX-P1/404/0K
YBLX-P1/404/1P	Adjustable length of the iron lever with damping	YBLX-P1/404/1V YBLX-P1/404/0V YBLX-P1/404/0P	YBLX-P1/404/1W YBLX-P1/404/0W	YBLX-P1/404/1Q YBLX-P1/404/0Q
YBLX-P1/404/1T	Fork rod and two wheels without automatic reset	YBLX-P1/404/0T		
YBLX-P1/404/1U	Adjustable length of the single lever and single roller	YBLX-P1/404/0U		

3. Technical data

Table 4

Rated working voltage	AC-15 380V ; DC-13 220V
Rated control current	AC-15 0.8A ; DC-13 0.15A
Conventional thermal current	10A
Ingress protection	IP52
Ambient temperature	-5℃~+40℃
Relative humidity	≤95%
Altitude	≤2000m
Scope of application	Automatic control, limiting movement, action or program control of the transmission mechanism of machine tool
Installation category	Ⅱ
Pollution degree	class3
Insulation voltage Ui	415V
Rated impulse withstand voltage Uimp	2.5KV

«Электро-Профи» - www.ep.ru

4. Overall and mounting dimensions

YBLX-P1/120/1U

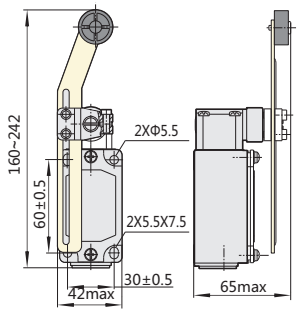

YBLX-P1/120/1E

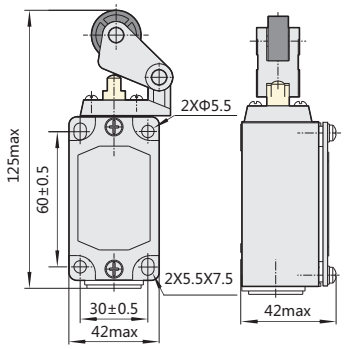

YBLX-P1/120/1G

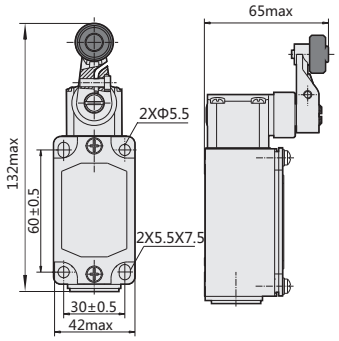

YBLX-P1/100/1G

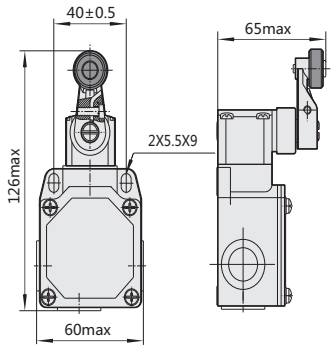

YBLX-P1/100/1E

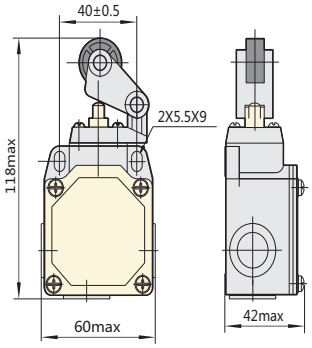

YBLX-P1/120/1C

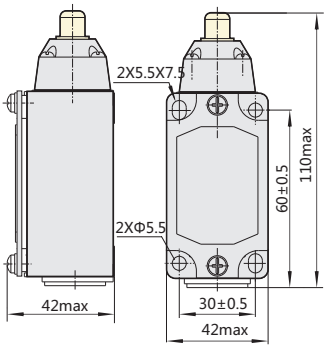

K

YBLX-P1/120/1D

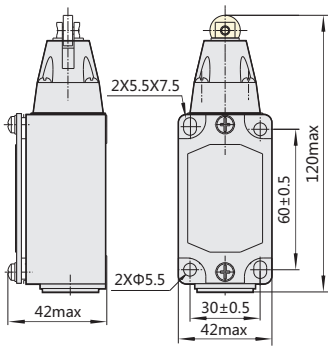

YBLX-P1/120/1F

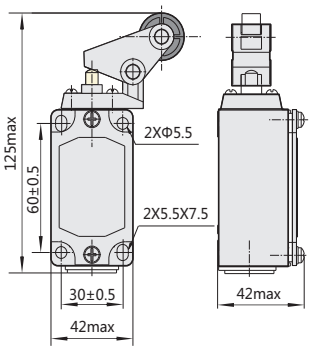

4.1 Open type

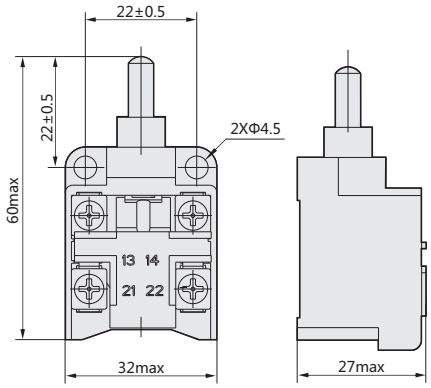

4.2 Protective enclosure

YBLX-P1/100 series

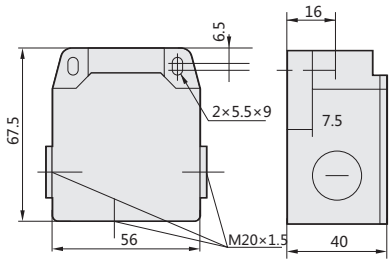

YBLX-P1/120 series

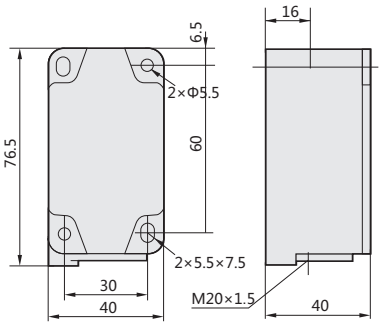

YBLX-P1/303 series

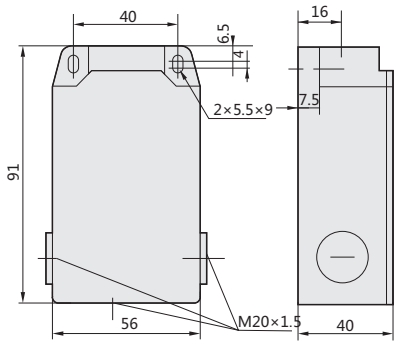

YBLX-P1/404 series

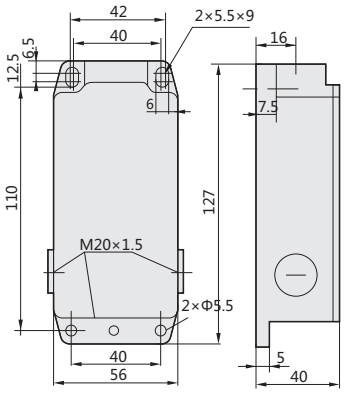

«Электро-Профи» - www.ep.ru

4.3 Type and data of driving head

Category B

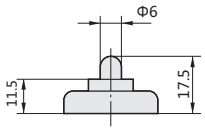

YBLX-P1/100/1B
YBLX-P1/120/1B
YBLX-P1/303/1B
YBLX-P1/404/1B

Category C

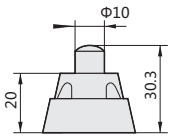

YBLX-P1/100/1C
YBLX-P1/120/1C
YBLX-P1/303/1C
YBLX-P1/404/1C

Category D

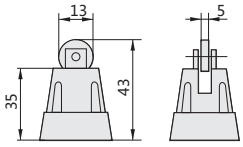

YBLX-P1/100/1D
YBLX-P1/120/1D
YBLX-P1/303/1D
YBLX-P1/404/1D

Category E

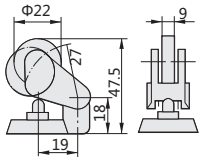

YBLX-P1/100/1E
YBLX-P1/120/1E
YBLX-P1/303/1E
YBLX-P1/404/1E

Category F

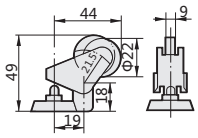

YBLX-P1/100/1F
YBLX-P1/120/1F
YBLX-P1/303/1F
YBLX-P1/404/1F

Category G

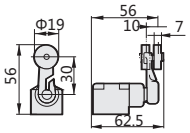

YBLX-P1/100/1G
YBLX-P1/120/1G
YBLX-P1/303/1G
YBLX-P1/404/1G

Category T

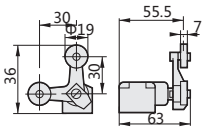

YBLX-P1/100/1T
YBLX-P1/120/1T

Category U

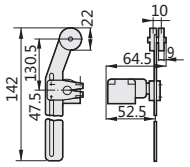

YBLX-P1/100/1U
YBLX-P1/120/1U
YBLX-P1/303/1U
YBLX-P1/404/1U

Category P

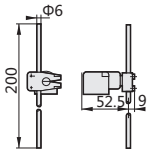

YBLX-P1/100/1P
YBLX-P1/120/1P
YBLX-P1/303/1P
YBLX-P1/404/1P

5. Ordering information

When ordering, the user shall indicate the product name, type and quantity.

For example: YBLX-P1/120/1C Travel switch 100 pieces.

User note:YBLX-P1/120/1U(1P,1G),YBLX-P1/303/1U(1P,1G),YBLX-P1/404/1U(1P,1G) restricted by operating mechanism.

It can not apply to the arm action is greater than 90 degree condition. Beware of the action angle is too large lead to turn arm rotation and other undesirable phenomena.

K

«Электро-Профи» - www.ep.ru



YBLX-K1 Travel Switch

1. General

YBLX-K1 series of travel switch is applicable to electric circuit with voltage not more than AC-15 Ue 380V,50Hz/60Hz or DC -13 Ue 220V and current not more than AC-15 Ie 0.8A or DC-13 Ie 0.15A for travel control, direction of motion or speed change of movement mechanism, automatic control, motion direction or speed change of machine tool, automatic control, action limit & travel or procedure control of movement mechanism.

Standard: GB/T 14048.5,IEC60947-5-1,CCC China Compulsory Product Certification.

2. Type designation

YB LX-K 1/□ 1 1

- A pair of normally closed contacts
- A pair of normally open contacts
- "1" refers single roller
  "2" refers two rollers
  "3" refers plunger type
  "4" refers roller plunger type
  "5" refers Universal type
- Design sequence No.
- Fast
- Travel switch
- Improved code

Contact type

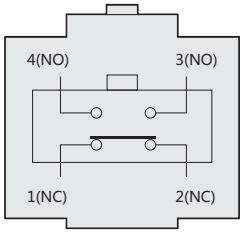

3. Technical data

Table 1

Ingress protection	IP52
Conventional thermal current	5A
Rated voltage	AC-15 380V ; DC-13 220V
Rated control current	AC-15 0.8A ; DC-13 0.15A
Operation frequency	20 t/min
Ambient temperature	-5℃~+40℃
Relative humidity	≤90%(20℃)
Altitude	≤2000m
Scope of application	Automatic control of machine tool and action or program control of limited movement mechanism
Standard	GB/T 14048.5 IEC 6090947-5-1
Installation category	Ⅱ
Pollution degree	class3
Insulation voltage Ui	415V
Rated impulse withstand voltage Uimp	2.5KV

Table 2

Operating characteristic \ Type	YBLX-K1/111	YBLX-K1/211	YBLX-K1/311	YBLX-K1/411	YBLX-K1/511
Maximum operating force (max OF)	15N	20N	20N	20N	15N
Maximum operating range (max PT)	45°	70°	5mm	5mm	45°
Minimum overtravel (min OT)	15°		1mm	1mm	

«Электро-Профи» - www.ep.ru

4. Overall and mounting dimensions

YBLX-K1/111

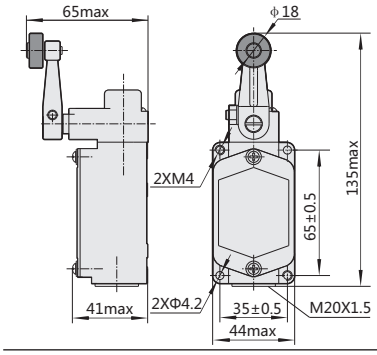

YBLX-K1/211

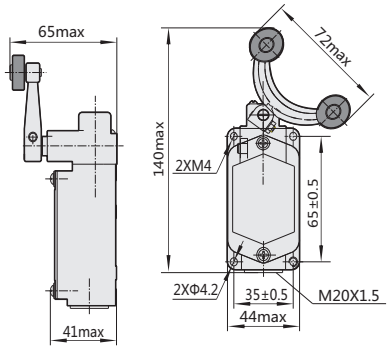

YBLX-K1/311

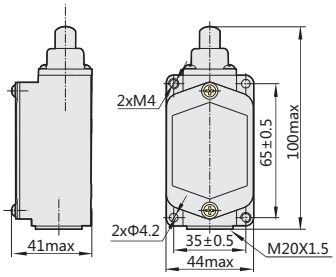

YBLX-K1/411

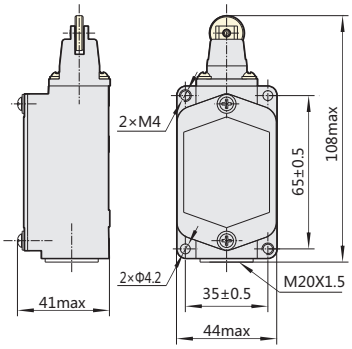

YBLX-K1/511

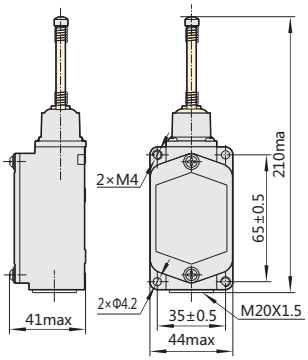

YBLX-K1/K

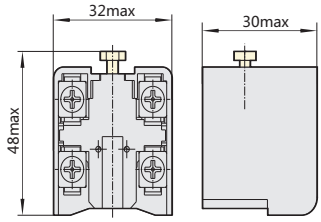

5. Ordering information

When ordering, the user shall indicate the product name, type and quantity.
For example: YBLX-K1/111 Travel switch 100 pieces.
User note:YBLX-K1/111 restricted by operating mechanism. It can not apply to the arm action is greater than 90 degree condition. Beware of the action angle is too large lead to turn arm rotation and other undesirable phenomena.

K

«Электро-Профи» - www.ep.ru



YBLX-K3 Travel Switch

1. General

YBLX-K3 series of travel switch is applicable to electric circuit with voltage not more than AC-15 Ue 380V,50Hz/ 60Hz or DC-13 Ue 220V and current not more than AC-15 Ie 5A 0.8A or DC-13 Ie 0.15A for travel control, direction of motion or speed change of movement mechanism, automatic control of machine tool, action limit & travel or procedure control of movement mechanism. Standard: GB/T 14048.5, IEC60947-5-1,CCC China Compulsory Product Certification.

2. Type designation

YB LX K 3/□/□

- Operation modes (see Table1)
- Type of protective enclosure（K、S、H）
  Type of protective enclosure:
  K: no protective enclosure, open type;
  S: Vertical protective enclosure with a cable entry at the bottom;
  H: Horizontal protective enclosure with a cable entry on the bottom and each side
- Design sequence No.
- Fast
- Travel switch
- Improved code

Contact type

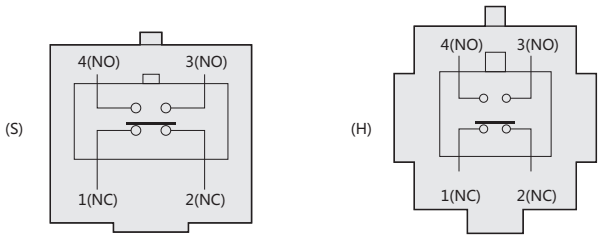

Table 1

Symbol	Operation modes
Z	Plunger type
L	Roller plunger type
B	Roller jib type
T	Adjustable roller jib type
D	Flexible rocker type
J	Adjustable metal rocker type
H1	“cross” type, two wheels are in the same direction (upper left, upper right)
H2	“cross” type, left wheel is the front and the right wheel is on the back (upper left, lower right)
H3	“cross” type, left wheel is the front and the right wheel is on the back (lower left, upper right)
W	Universal type

«Электро-Профи» - www.ep.ru

3. Technical data

Table 2

Ingress protection	**IP52**
Rated voltage	AC-15 380V ； DC-13 220V
Rated control current	AC-15 0.8A ； DC-13 0.15A
Operation frequency	20 t/min
Ambient temperature	-5℃~+40℃
Relative humidity	≤90%
Altitude	≤2000m
Installation category	Ⅱ
Pollution degree	class3
Insulation voltage Ui	415V
Rated impulse withstand voltage Uimp	2.5KV
Scope of application	For operation, control, limit, signal and interlock in control circuit and auxiliary circuit. Typical application: control AC, DC electromagnets
Standard	GB/T 14048.5 IEC 60947-5-1

Table 3

Type / **Operating characteristic**	**YBLX-K3/20$^{S}_{H}$/Z** **YBLX-K3/20$^{S}_{H}$/L**	**YBLX-K3/20$^{S}_{H}$/B** **YBLX-K3/20$^{S}_{H}$/T** **YBLX-K3/20$^{S}_{H}$/J**	**YBLX-K3/20$^{S}_{H}$/D**	**YBLX-K3/20$^{S}_{H}$/H1** **YBLX-K3/20$^{S}_{H}$/H2** **YBLX-K3/20$^{S}_{H}$/H3**	**YBLX-K3/20$^{S}_{H}$/W**
Maximum operating force (max OF)	30N	20N	20N	30N	20N
Maximum operating range (max PT)	7mm	45°	45°	80°	45°
Maximum operating force (max OF)	2.0mm	20°	20°		-

4. Overall and mounting dimensions

YBLX-K3/20S/Z

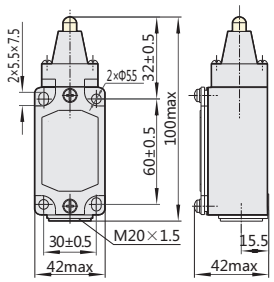

YBLX-K3/20S/B

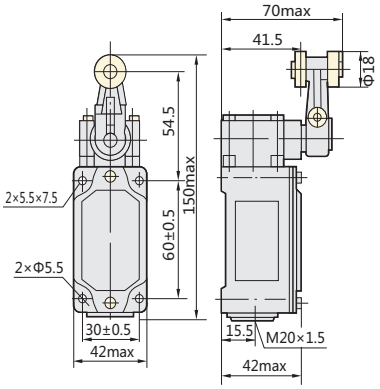

K

«Электро-Профи» - www.ep.ru

YBLX-K3/20H/D

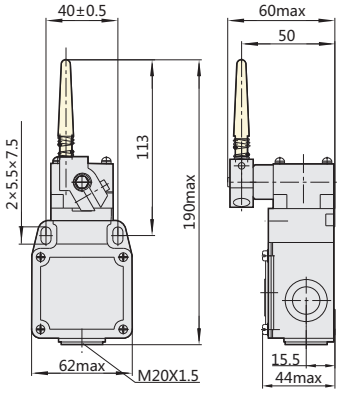

YBLX-K3/20S/T

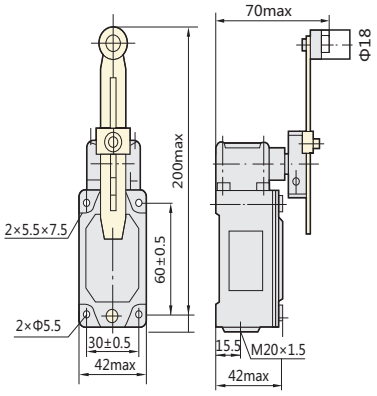

YBLX-K3/20S/W

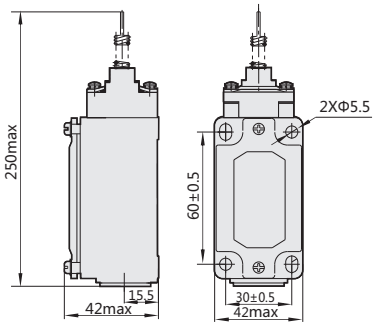

YBLX-K3/20S/H1, H2, H3

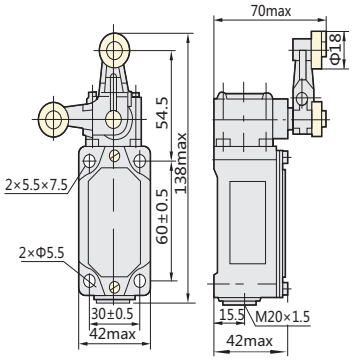

5. Ordering information

When ordering, the user shall specify the product name, type and quantity.
For example: YBLX-K3/20S/T Travel switch 100 pieces
User note:
YBLX-K3/20S/B, YBLX-K3/20H/B, YBLX-K3/20S/T. YBLX-L3/20H/T restricted by operating mechanism.
It can not apply to the arm action is greater than 90 degree condition.
Beware of the action angle is too large lead to turn arm rotation and other undesirable phenomena.

«Электро-Профи» - www.ep.ru



YBLX-10 Travel Switch

1. General

Series of YBLX-10 travel switch is suitable for AC-15 50Hz,Ue 380V,DC-13 220V, Ith 10A in electrical control circuit, using as terminal protection and travel switch for different kinds of crane, metallurgy and water equipment.

2. Type designation

YB LX 10 - □ □

- Number control circuit (digital representation)
- Actuating ways,digital code significance shown in Table 1
- Design sequence No.
- Travel switch
- Number of new products

3. Technical data

Table 2

Conventional thermal current	10A
Nominal voltage	AC-15 380V ； DC-13 220V
Nominal control current	AC-15 0.79A ； DC-13 0.091A
Operation frequency	6t/min
Ambient temperature	-5℃~+40℃
Relative humidity	≤90%(20℃)
Altitude	≤2000m
Installation category	Ⅱ
Pollution degree	class3
Insulation voltage Ui	415V
Rated impulse withstand voltage Uimp	2.5KV
Up to standard	GB/T 14048.5 , IEC 60947-5-1

Table 1

Digital code	Actuating ways
1	Single-roller lever operation arm
2	Double-roller fork lever operation arm
3	Heavy-hammer type loading lever operation arm

Contact type

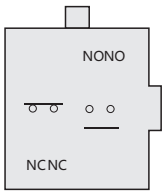

Type	Use
YBLX-10/11,12	Using for inertia stroke being very large slide works
YBLX-10/21,22	Using for inertia stroke being very large slide works

4. Overall and mounting dimensions

YBLX-10/11,YBLX-10/12

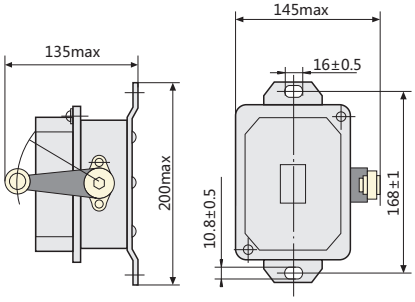

5. Ordering information

Please note the type of switch, name of switch, quantity of switch when users are ordering. For example,YBLX-10/21 travel 100

K

«Электро-Профи» - www.ep.ru



2. Type designation

YBLX-19/□ □ □

- "one" can automatically reset "two" can't automatically reset
- "0" direct-acting
  "1" Installed a roller on the transmission rod inside
  "2" Installed a roller on the transmission rod outside
  "3" Installed a roller on the transmission rod groove
  Different inside or inside and outside
- "0" no idler wheel
  "1" single idler wheel
  "2" Double idler wheels
- Design sequence No.
- Travel switch
- To improve products

Contact type

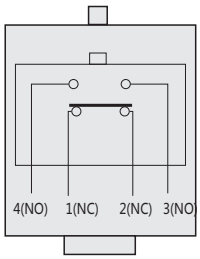

YBLX-19 Travel Switch

1. General

Apply to AC-15 50Hz/60Hz,Ue380V,Ie0.79A DC-13 Ue220V Ie0.1A and the following electrical lines, as stroke control of motion mechanism, motion direction or speed transformation, automatic machine tool control, limiting action of motion mechanism and control the trip or procedures used.

Standard: GB/T 14048.5,IEC 60947-5-1, won the Certification of CCC National mandatory product.

3. Technical data

Table 1

level of protection	IP52
Conventional thermal current	5A
Rated voltage	AC 380V ; DC220V
Rated control current	AC 0.79A ; DC0.1A
Frequency of operation	20t/min
Installation category	Ⅱ
Pollution degree	class3
Insulation voltage Ui	415V
Rated impulse withstand voltage Uimp	2.5KV
Ambient temperature	-5℃~+40℃
Relative humidity	≤90%(20℃)
Altitude of sea level	≤2000m
Comply with a standard	GB/T 14048.5 IEC 60947-5-1

Table 2

Type / Characteristic of performance	YBLX-19/001	YBLX-19/111 YBLX-19/121 YBLX-19/131	YBLX-19/212 YBLX-19/222 YBLX-19/232
Max of actuating force	16N	20N	25N
max of Operation range	7mm	45°	80°
Min of overtravel	2mm	15°	-

«Электро-Профи» - www.ep.ru

Table 3

Type	Structure and installation of drive
YBLX-19/001	Plunger
YBLX-19/111	A wheel mounted inside the "-" shaped pivot arm
YBLX-19/121	A wheel mounted outside the "-" shaped pivot arm
YBLX-19/131	A wheel mounted in the groove of the "-" shaped pivot arm
YBLX-19/212	Two roller are installed on internal side of "Cross" shaped rotating arm (Lower left Lower right)
YBLX-19/222	Two roller are installed on internal side of "Cross" shaped rotating arm (Upper left ,Upper right)
YBLX-19/232	Two roller are installed on "Cross" shaped rotating arm, One on the internal side and the other on the external side(Lower left ,Upper right)

4. Overall and mounting dimensions

YBLX-19/001

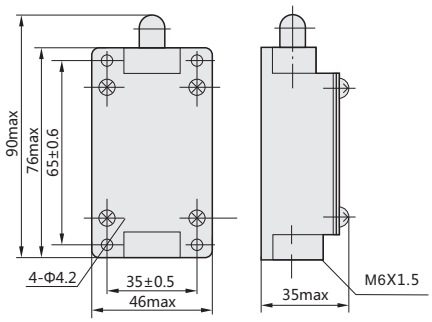

YBLX-19/111

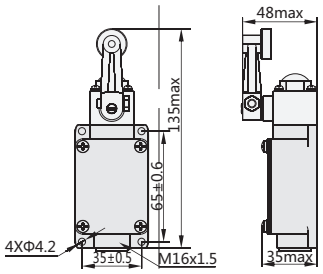

YBLX-19/121

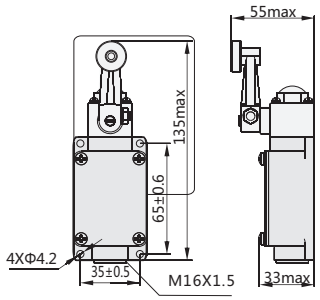

YBLX-19/131

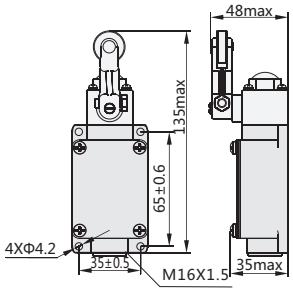

YBLX-19/212,222,232

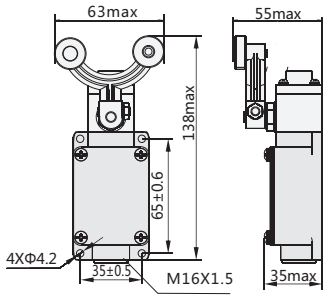

5. Ordering information

Please explain the model of switch, names and numbers when customers order

Such as: YBLX-19/111 Travel switch 100 peaces

User note:
YBLX-19/111,YBLX-19/121,YBLX-19/131 restricted by operating mechanism.
It can not apply to the arm action is greater than 90 degree condition.
Beware of the action angle is too large lead to turn arm rotation and other undesirable phenomena.

K

«Электро-Профи» - www.ep.ru



YBLT-3, YBLT-4
Foot Switch

1. General

The foot switch YBLT-3,4 series is suitable for alternating current 50Hz/60Hz;and the control lines of voltage to 380V,volts d.c.to 220V;as control machine tools electric,medical facility.

In accordance with standard: GB/T 14048.5, IEC 60947-5-1.

2. Type designation

YB LT- □

- Design sequence No.
- Foot switch
- Type of improved product

Contact type

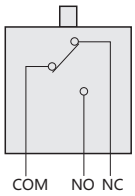

3. Overall and mounting dimensions

Voltage current:AC-15 380V ; DC-13 220V;
Voltage current:AC-15 0.79A ; DC-13 0.14A;
Promise heating current:3A;
Sheathing material:YBLT-3, YBLT-4 cast aluminum alloy;
Level of protection:IP31;
Installation category:Ⅱ;
Pollution degree:class3;
Insulation voltage Ui:415V;
Rated impulse withstand voltage Uimp:4KV.

«Электро-Профи» - www.ep.ru

YBLT-3

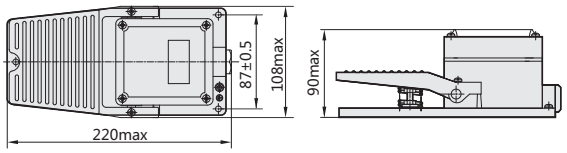

YBLT-4

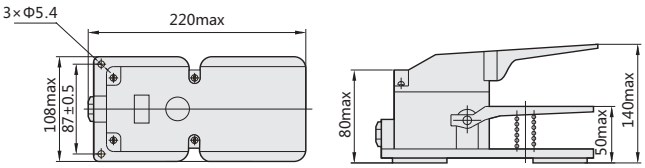

YBLT-4



4. Ordering information

The full model number,name and quality of the switch should be given when ordering.
For example: YBLT-3foot switch, 100 peace

K

«Электро-Профи» - www.ep.ru



YBLT-EKW/5A/B Foot Switch

1. General

The foot switch YBLT-EKW/5A/B series is suitable for alternating current 50~60Hz;and the control lines of voltage to 380V,volts d.c.to 220V;as control machine tools electric,medical facility etc.

In accordance with standard: GB/T 14048.5, IEC 60947-5-1.

2. Type designation

YB LT - EKW/5A /B

- B — Type B
- 5A — Promise heating current
- EKW — Design sequence No.
- LT — Foot switch
- YB — Type of improved product

Contact type

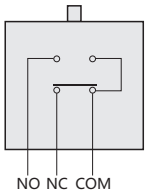

3. Overall and mounting dimensions

Voltage rating:AC-15 380V ; DC-13 220V;
Voltage current:AC-15 0.8A ; DC-13 0.16A;
Promise heating current:5A;
Switch element: YBLX-19/K Sheathing;
material: cast aluminum alloy;
Level of protection:IP20;
Installation category:Ⅱ;
Pollution degree:class3;
Insulation voltage Ui:500V;
Rated impulse withstand voltage Uimp:2.5KV;
Operation frequency:20t/min;
Ambient temperature:-5℃-+40℃.

YBLT-EKW/5A/B

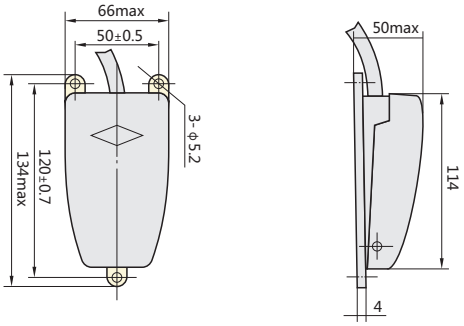

4. Ordering information

The full model number,name and quality of the switch should be given when ordering.
For example: YBLT-EKW/5A/Bfoot switch, 100 peace

«Электро-Профи» - www.ep.ru



YBLT-FS/1
Foot Switch

1. General

Voltage rating:AC-15 380V ; DC-13 220V;
Voltage current:AC-15 0.79A ; DC-13 0.14A;
Promise heating current:5A;
Sheathing material:YBLT-FS/1 armor plate.

2. Overall and mounting dimensions

YBLT-FS/1

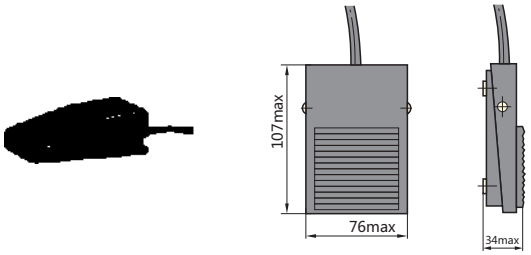

Contact type

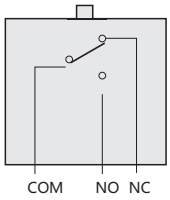

3. Ordering information

The full model number,name and quality of the switch should be given when ordering.
For example: YBLT-FS/1 foot switch, 100 peace

K

«Электро-Профи» - www.ep.ru



YBLT-FS/201
Foot Switch

1. General

YBLT-FS/201 foot switches apply to the control circuit, whose alternating current is 50Hz/60Hz,voltage is 380v,direct current is 220v,as electrical control of machinery tools,armarium and so on. The normal operation of switch is on altitude, which is not exceeding 2000m,ambient temperature is -30℃~+40℃,relative air humidity is not more than 85%;up to standard:GB/T 14048.5, IEC 60947-5-1.

2. Type designation

YB LT- FS/□

- Design sequence No.
- Foot switch
- Improved product

Contact type

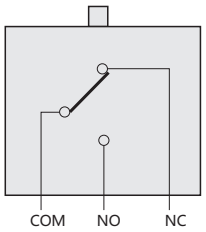

3. Overall and mounting dimensions

Rated current:AC-15 380V ; DC-13 220V;
rated current:AC-15 0.8A ; DC-13 0.16A;
agreed heating current:5A;
canning material:plastic.

YBLT-FS/201

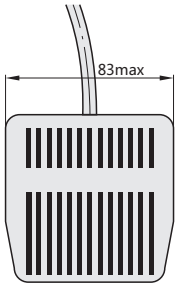

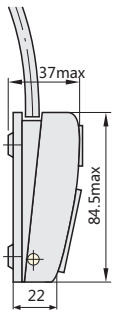

«Электро-Профи» - www.ep.ru



YBLXW-5
Microswitch

1. General

YBLXW-5 series microswitches apply to the control circuit,whose alternating current is 50Hz/60Hz,AC-15 380V,Ie0.79A;DC-13 220V, Ie0.14A.The switches are widely applied to the travel control, spacing protection and interlock of all kinds of machinery equipments,which are machinery, spinning, electronic instrument and so on. The normal operation of products are on altitude, which is not exceeding 2000m,environment temperature is -5℃~+40℃;humidity is 90%(20℃);operation frequency is 20 times every minute,level of protection is IP52.Up to standard:GB/T 14048.5,IEC 60947-5-1,acquired CCC national compulsory product certification.

2. Type designation

YB LX W-5/ 1 1 □

- Operating mode:code and implication see right-hand chart
- A pair of normally closed contact
- A pair of normally opened contact
- Design sequence No.
- Inching
- Travel switch
- Improved product

Contact type

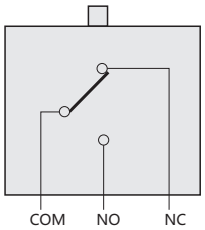

K

«Электро-Профи» - www.ep.ru

3. Technical data

Level of protection	IP52	
Operation frequency	20t/min	
Load	Ordinary type	AC-15 380V ; DC-13 220V
		AC-15 0.79A ; DC-13 0.14A
Speed of operation	0.1mm/s~0.5mm/s	
Contact resistance	≤100mΩ	
Environment temperature	-5℃~+40℃	
Relative humidity	≤90%(20℃)	
Altitude	≤2000m	
Installation category	Ⅱ	
Pollution degree	class3	
Insulation voltage Ui	415V	
Rated impulse withstand voltage Uimp	2.5KV	
Scope of application	The travel control, spacing protection, and interlock of all kinds of machinery equipments, which are machinery,spinning,electronic instrument and so on.	
Up to standard	GB/T 14048.5 , IEC 60947-5-1	

Model	Operating mode
YBLXW-5/11Z	Handspike plunger type
YBLXW-5/11N2	Compression bar type
YBLXW-5/11G2	Roller compression bar type
YBLXW-5/11D1	Short spring–loaded plunger type
YBLXW-5/11M	Panel mounting plunger type
YBLXW-5/11Q1	Panel mounting roller plunger type
YBLXW-5/11Q2	Panel mounting landscape roller plunger type
YBLXW-5/11N1	Hinge rail type
YBLXW-5/11G1	Hinge roller long rail type
YBLXW-5/11G2277	Hinge one–way roller long rail type
YBLXW-5/11G3	Hinge roller rail type
YBLXW-5/11GS	Fine push rod type

Model / Performance characteristic	YBLXW-5/11Z	YBLXW-5/11D1	YBLXW-5/11M	YBLXW-5/11Q1	YBLXW-5/11Q2
Movement(OF)	≤10N	≤10N	≤10N	≤10N	≤10N
Movement route	≤3.5mm	≤3.5mm	≤3.5mm	1.2±0.9mm	1.2±0.9mm
Excess of stroke	≥0.5mm	≥0.5mm	≥3mm	≥3mm	≥3mm

Model / Performance characteristic	YBLXW-5/11N1	YBLXW-5/11N2	YBLXW-5/11G1	YBLXW-5/11G2	YBLXW-5/11G3
Movement(OF)	≤6N	≤7N	≤6N	≤7N	≤6N
Movement route	≤13mm	≤10mm	≤11mm	≤7mm	≤8.5mm
Excess of stroke	≥3mm	≥2mm	≥3mm	≥2mm	≥2.5mm

«Электро-Профи» - www.ep.ru

4. Overall and mounting dimensions

YBLXW-5/11Z

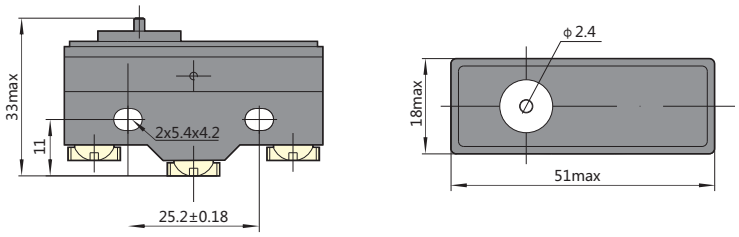

YBLXW-5/11N2

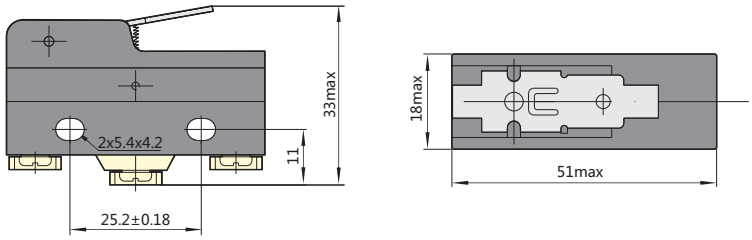

YBLXW-5/11G3

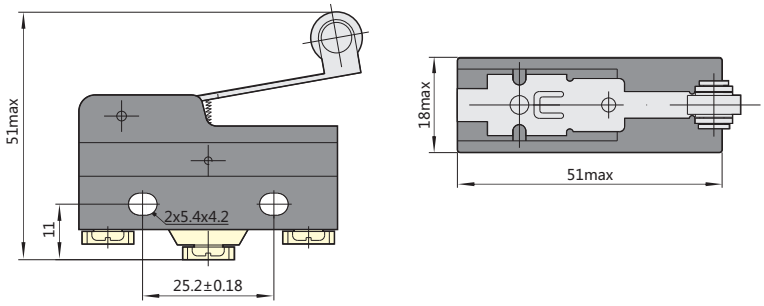

K

«Электро-Профи» - www.ep.ru

YBLXW-5/11D1

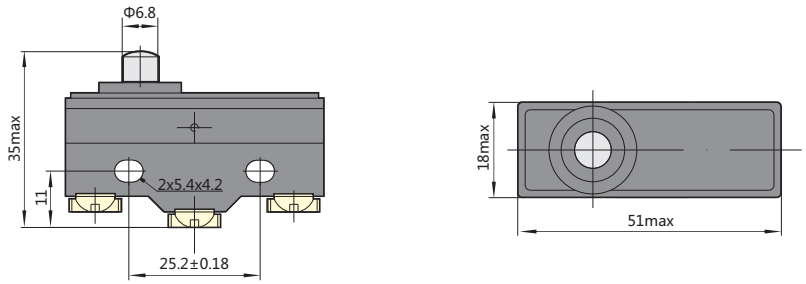

YBLXW-5/11M

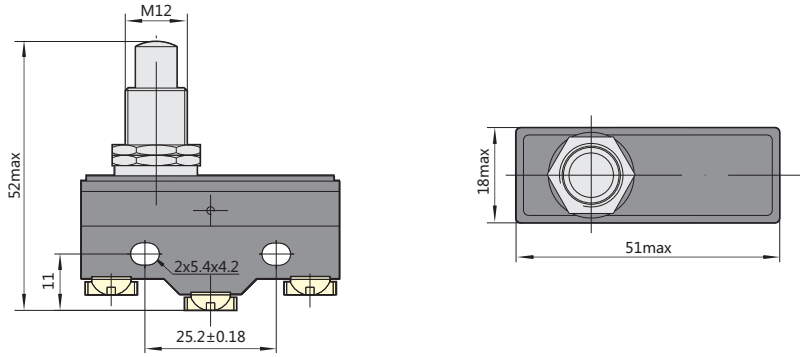

YBLXW-5/11Q1

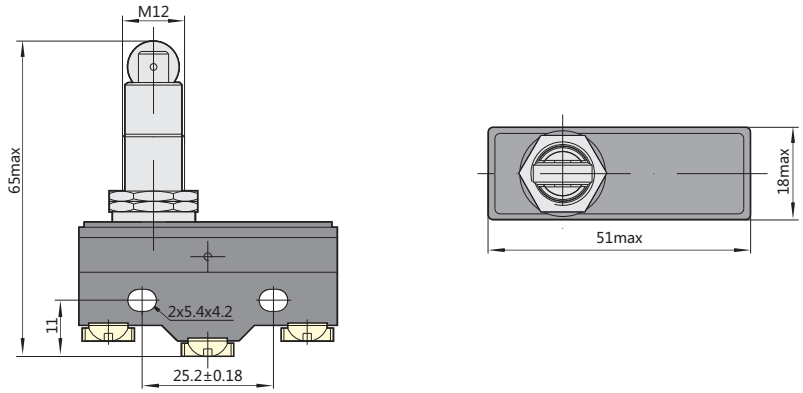

«Электро-Профи» - www.ep.ru

YBLXW-5/11Q2

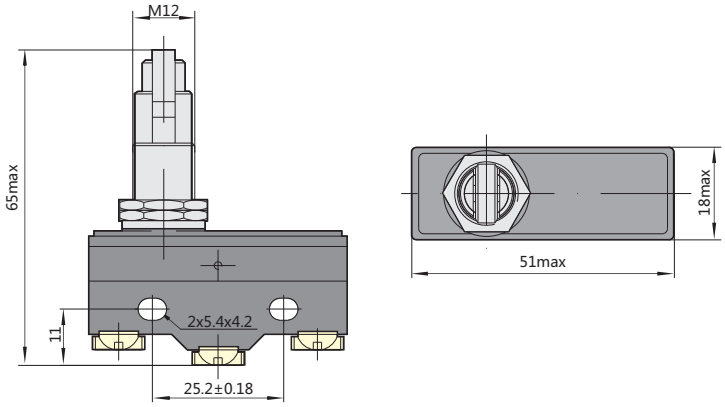

YBLXW-5/11N1

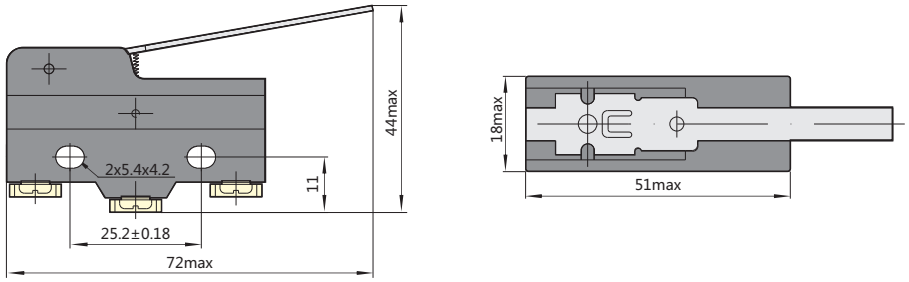

YBLXW-5/11G2

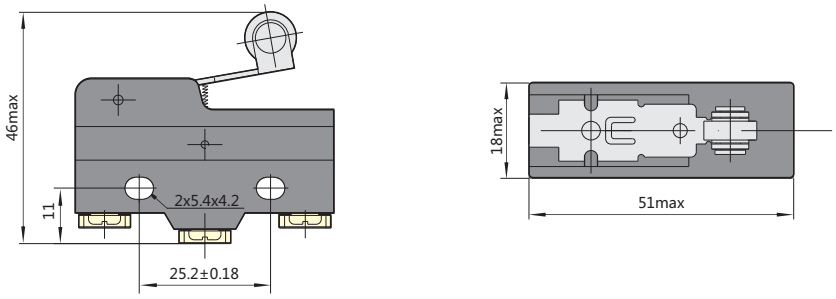

K

YBLXW-5/11G1

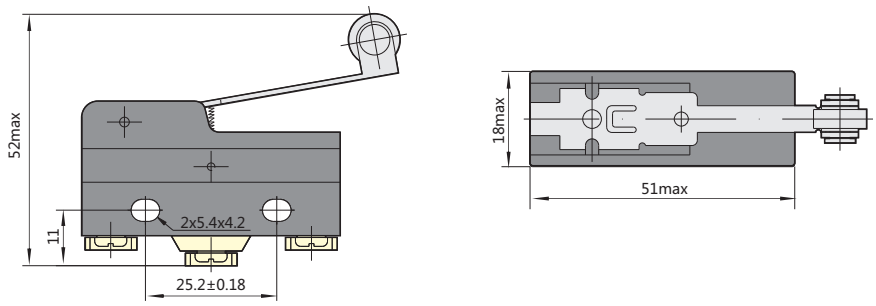

YBLXW-5/11G2277

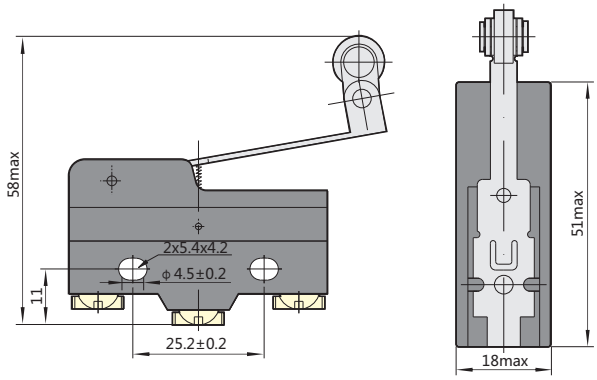

YBLXW-5/11GS

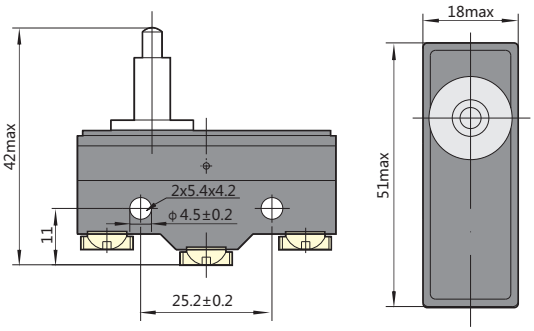

5. Ordering information

5.1 The user must specify the model, name and quantity of the switch when ordering. Eg: 100 YBLX-5/11Z Micro Switch
5.2 User note:
5.2.1 Please do not use in hot water and water vapor condition.
5.2.2 Please do not dip directly in oil or water.
5.2.3 Please install the equipment in the place that vibration does not occur, also no resonance occurs.

«Электро-Профи» - www.ep.ru



YBLXW-6 Microswitch

1. General

YBLXW-6 series microswitches apply to the control circuit, whose alternating current are 50Hz/60Hz,AC-15 380V,Ie0.79A;DC-13 220V,Ie0.14A.They are widely applied to the travel control, spacing protection and change the use of circuit component of all kinds of machinery equipments, which are machinery, spinning,light industry,electronic instrument and so on. The normal operation of products are on altitude, which is not exceeding 2000m,environment temperature is -5℃~+40℃; humidity is 85%(20℃);operation frequency is 20 times every minute, level of protection is IP52.

Up to standard:GB/T 14048.5,IEC 60947-5-1,acquired CCC national compulsory product certification.

2. Type designation

YB LX W-6 /1 1 □

- Operating mode
- A pair of normally closed contact
- A pair of normally opened contact
- Design sequence No.
- Inching
- Travel switch
- Improved product

Contact type

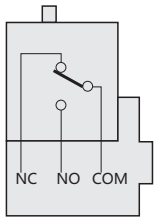

3. Technical data

Level of protection	IP52
Nominal voltage	AC-15 380V ; DC-13 220V
Nominal current	AC-15 0.79A ; DC-13 0.14A
Operation frequency	20 t/min
Operating speed	0.1mm/s~0.5mm/s
Environment temperature	-5℃~+40℃
Related humidity	≤85%(20℃)
Altitude	≤2000m
Installation category	Ⅱ
Pollution degree	class3
Insulation voltage Ui	415V
Rated impulse withstand voltage Uimp	2.5KV
Scope of application	Machine tool, mechanical automatic control, constrained motion, transmission mechanism movement or process contro
Up to standard	GB/T 14048.5 , IEC 60947-5-1

K

«Электро-Профи» - www.ep.ru

Type(recommend to adopt)	Operating mode	Type of replacement(discontinue)				
YBLXW-6/11BZ	Panel mounting plunger type	-AZ/7310	-TZ/7310	-MN/5310	-ZL/15G03	-D4MC/5000
YBLXW-6/11CA	Long press-button type					
YBLXW-6/11DA	Short press-button Itype	-AZ/7110	-TZ/7110	-MN/5110	-ZL/15G01	
YBLXW-6/11DA2	Short press-button II type	-AZ/7100	-TZ/7100	-MN/5100		
YBLXW-6/11CG	Long triangle type	-AZ/7120	-TZ/7120	-MN/5120	-ZL/15G060	-D4MC/1000
YBLXW-6/11DG	Short triangle type	-AZ/7140	-TZ/7140	-MN/5140	-ZL/15G06	-D4MC/1020
YBLXW-6/11CL	Long spar roller type	-AZ/7121	-TZ/7121	-MN/5121	-ZL/15G07	-D4MC/2000
YBLXW-6/11DL	Short spar roller type	-AZ/7141	-TZ/7141	-MN/5141	-ZL/15G09	-D4MC/2020
YBLXW-6/11CDL	Long spar one-way roller type	-AZ/7124	-TZ/7124	-MN/5124		
YBLXW-6/11DDL	Short spar one-way roller type	-AZ/7144	-TZ/7144	-MN/5144	-ZL/15G070	-D4MC/3030
YBLXW-6/11HL	Lateral roller type	-AZ/7312	-TZ/7312	-MN/5312	-ZL/15G031	-D4MC/5040
YBLXW-6/11ZL	Straight roller type	-AZ/7311	-TZ/7311	-MN/5311	-ZL/15G030	-D4MC/5020
YBLXW-6/11W1	Universal I type	-AZ/7161	-TZ/7161	-MN/5161		
YBLXW-6/11W2	Universal II type	-AZ/7166	-TZ/7166	-MN/5166		
YBLXW-6/11W3	Universal III type	-AZ/7169	-TZ/7169	-MN/5169		

Performance characteristic / Model	Movement (OF)max	Movement route (PT)max	Overtravel (OT)min
YBLXW-6/11BZ	≤8N	≤3.5mm	≥1.2mm
YBLXW-6/11CA	≤8N	≤3.5mm	≥1.2mm
YBLXW-6/11DA	≤8N	≤3.5mm	≥1.2mm
YBLXW-6/11DA2	≤8N	≤3.5mm	≥1mm
YBLXW-6/11CG	≤5N	≤12mm	≥4mm
YBLXW-6/11DG	≤6N	≤10mm	≥2mm
YBLXW-6/11CL	≤5N	≤12mm	≥4mm
YBLXW-6/11DL	≤6N	≤10mm	≥2mm
YBLXW-6/11CDL	≤6N	≤12mm	≥4mm
YBLXW-6/11DDL	≤5N	≤10mm	≥2mm
YBLXW-6/11HL	≤8N	≤3.5mm	≥1.2mm
YBLXW-6/11ZL	≤8N	≤3.5mm	≥1.2mm
YBLXW-6/11W1	≤2N	≤30°	-
YBLXW-6/11W2	≤2N	≤30°	-
YBLXW-6/11W3	≤2N	≤30°	-

4. Overall and mounting dimensions

YBLXW-6/11ZL

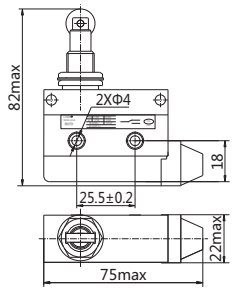

«Электро-Профи» - www.ep.ru

YBLXW-6/11HL

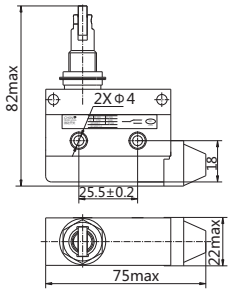

YBLXW-6/11DG

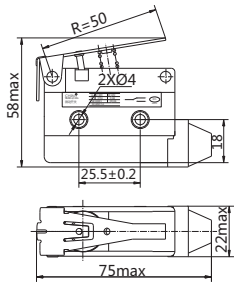

YBLXW-6/11DL

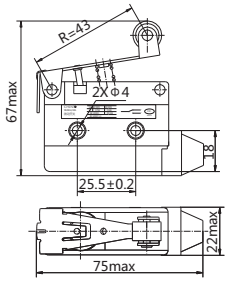

YBLXW-6/11BZ

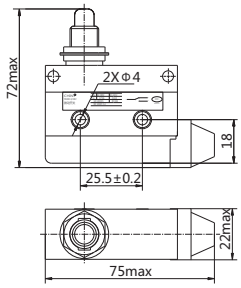

YBLXW-6/11CG

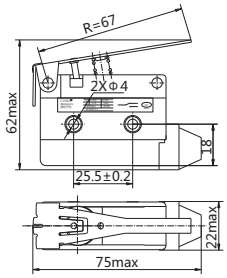

YBLXW-6/11CL

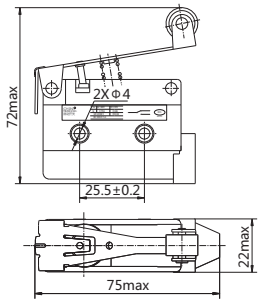

YBLXW-6/11DA

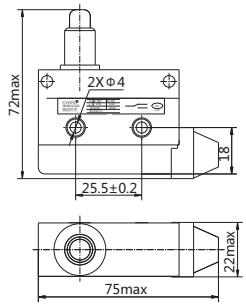

YBLXW-6/11DA2

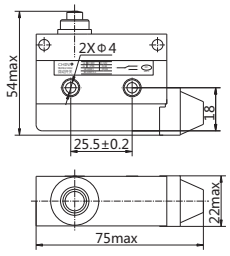

K

«Электро-Профи» - www.ep.ru

YBLXW-6/11CA

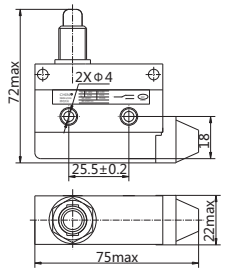

YBLXW-6/11DDL

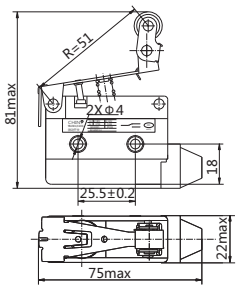

YBLXW-6/11W1

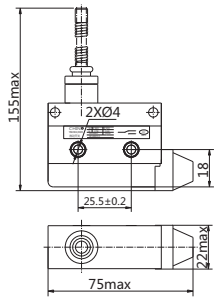

YBLXW-6/11W2

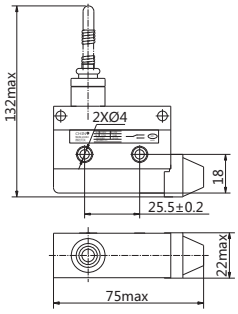

YBLXW-6/11W3

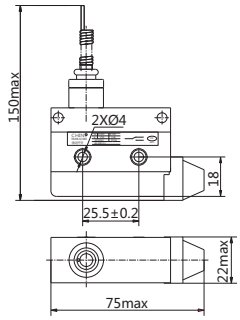

YBLXW-6/11CDL

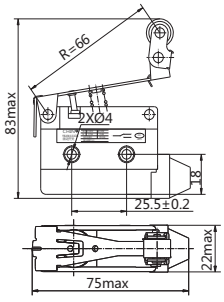

5. Order information

5.1 When ordering, the user shall specify the switch type, name and quantity.
For example: YBLXW-6/11DA. 100 Microswitch;

5.2 User note:

5.2.1 Please do not use it in hot water and water vapor condition.

5.2.2 Please do not use it directly in oil and water

5.2.3 Please install the equipment in the place that vibration does not occur, also no resonance occurs.

«Электро-Профи» - www.ep.ru



JD Electromagnetic Speed-adjustable Motor Control Device

1. General

JD series electromagnetic speed-adjustable motor controller is the national union (unified) design product of the former Ministry of Machinery Industry used to control speed governing of the electromagnetic speed-adjustable motor (slip motor) to achieve constant torque stepless speed control. The controller applies only to slip motor instead of ordinary motor.

2. Type designation

JD □□-□

- JD: the controller of electromagnetic speed-adjustable motor
- □□: design number(1-pointer type 2 -figure type capacity reference to table 3
- □: A: manual ordinary type B:manual precise type
- □: maximum power of controlled motor(W)

3. Operating conditions

3.1 Scope of speed adjustment
Power supply:~220V(±10%), 50Hz or 60Hz,
100r/min~1300r/min

3.2 Rotation speed variation rate
(mechanical properties-hardness)

$$\text{Rotation speed variation rate} = \frac{\text{Speed under 5\% load - Speed under 100\% load}}{\text{Rated speed}} \times 100\%$$

3.3 Steady speed accuracy≤1%

3.4 Maximum output:DC90V,8A

3.5 Controlling motor power:0.55kW~90kW

3.6 voltage speed ratio in three-phase midfrequency of tachogenerator≥2V/100r/min

Plug number	Connect corresponding name
1	midcourt line~220V
2	phase line~220V
3	Clutch excitation winding F1
4	Clutch excitation winding F2
5	Output end of tachogeneratorU
6	Output end of tachogeneratorV
7	Output end of tachogeneratorW

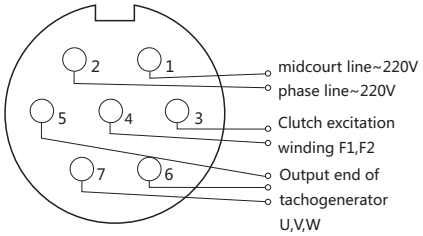

Note:F1,F2 are to select and use (recommend) 1mm2 copper conductor with 0.55kW~40kW and 1.5mm2 copper conductor with 45kw-90kw;U,V,W conductors are select and use (recommend) 0.75mm2 or 1mm2 copper conductor.

K

«Электро-Профи» - www.ep.ru

3.7 Manual ordinary type

Table 1

Model No.	JD_2^1A-11	JD_2^1A-40	JD_2^1A-90
Supply voltage	~220V(±10%) 50Hz~60Hz		
Maximum output rating(direct current 90V)	3.15A	5A	8A
Controllable power of motor (kW)	0.55~11	15~40	45~90
Tachogenerator	Ratio of transmission of Phase-Ⅲ i-f voltage is ≥2V/100r/min		
Relative speed variation	≤2.5%		
Steady velocity precision	≤1%		
Governor deflection (r/min)	1300~100	1300~100	1300~130

4. Overall and mounting dimensions

JD_2^1A-type external dimensions

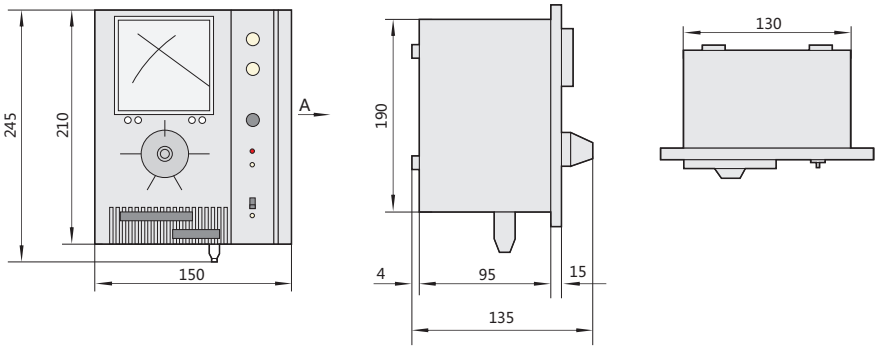

JD_2^1A-type plate embedded-type installation and the size of the holes controller

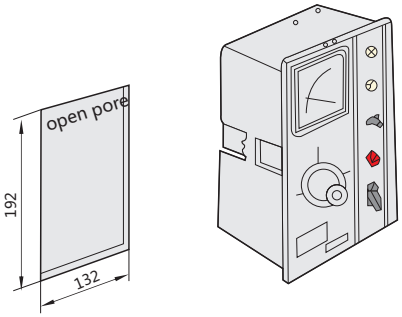

JD_2^1A-type used for wall-hung type installation size

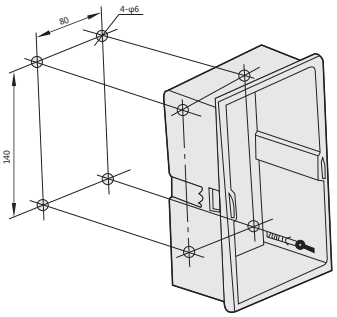

«Электро-Профи» - www.ep.ru

Link connecting control casing and asynchronous motor with electromagnetic speed regulation

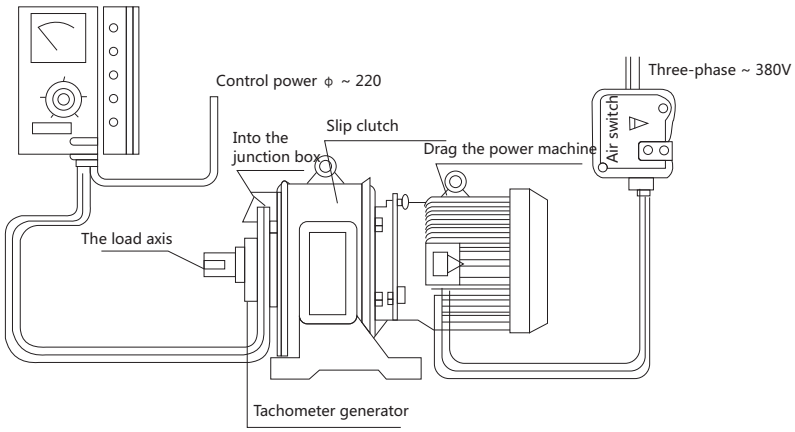

5. Ordering information

5.1 When ordering, shall give clear indicate of type,tachometer form,operation type, controlled power of motor and quantity.

5.2 If there are other special requirements, shall be indicated

5.3 ordering example: 200 JD1A-40, represent JD1A with indicating pointer,manual conventional type, controlled power of motor 40kW 200 of motor controllers with electromagnetic speed regulation.

«Электро-Профи» - www.ep.ru

CHINT ELECTRIC | Next series

The Next Reliable Choice

Modular Din Rail Product



Contact site indicating window, more clearly on the position

All products have the contact site indicating window, which can prevent wrong operation, and make the using more reliable.

Large current with small dimension, save the installation space

80A MCCB is only 18mm width, while 80A RCCB is only 36mm width.

More choice of specifications of the residual operating current

6 specifications including 10mA, 30mA, 50mA,75mA, 100mA and 300mA, for a wider choice and more accurate protection.

Complete accessories, multifunctional combination

More accessories selection to achieve customer needs, reduce customization and cost.

Absolute adaptability, with steady and reliable operation in extreme conditions

-35°C/+70°C operating temperature range. Meets several applications requirements.



«Электро-Профи» - www.ep.ru

10mA
Earth leakage protection

First prevent the danger
More reliably on safety



«Электро-Профи» - www.ep.ru

CHINT ELECTRIC | Next series

Modular Din Rail Product

Identifier description P-001

Product overview

Miniature circuit breaker P-002
Residual current operated circuit breaker P-003
Accessories P-004
Isolation P-006

Parameters

Circuit breaker and switch parameters P-007
Residual current operated circuit breaker (RCBO) parameters P-009

Tripping characteristics P-011

Cross-sectional area of the connecting copper wire P-012

Product selection and order P-013

Product description P-014

«Электро-Профи» - www.ep.ru

NXB-63 Miniature circuit breaker

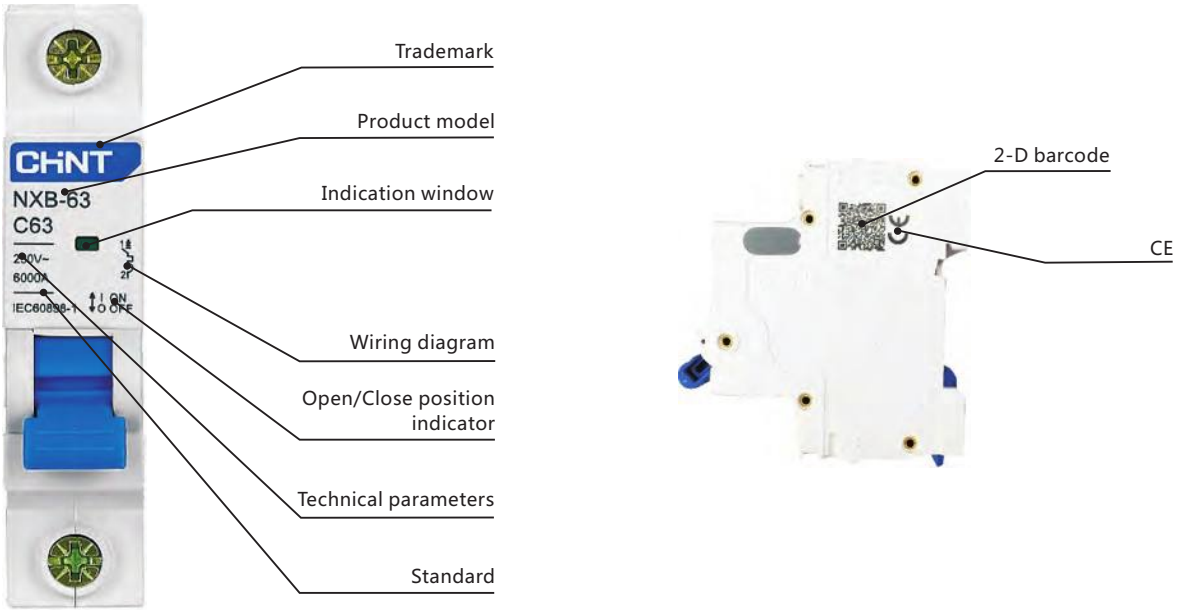

NXBLE-63 Residual current operated circuit breaker

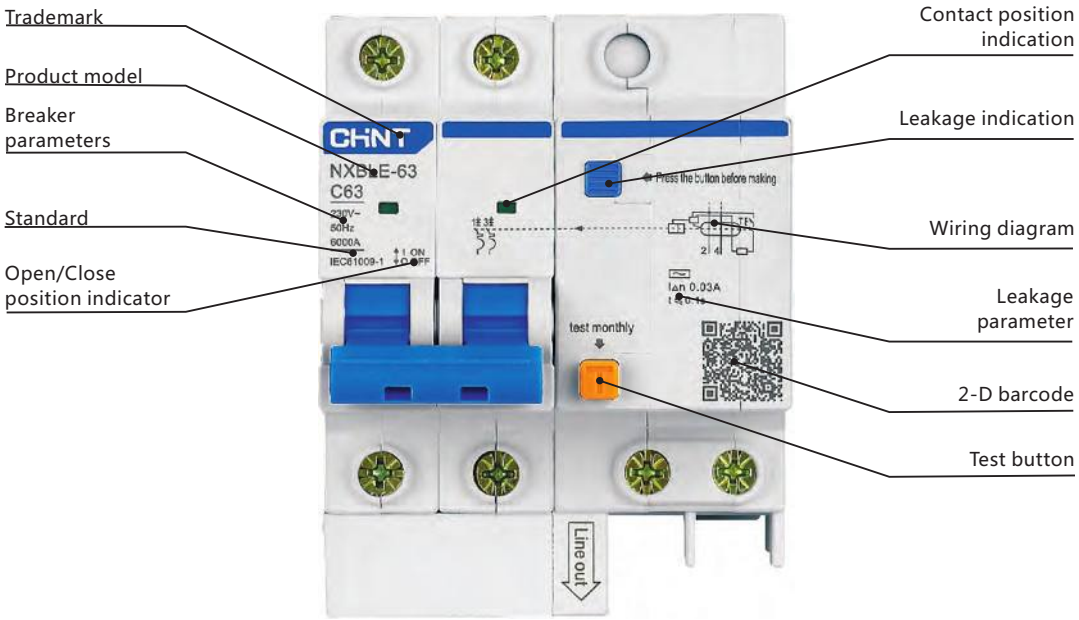

«Электро-Профи» - www.ep.ru

L

Miniature circuit breaker

Overload protection, short circuit protection and isolation. It is widely used in building power distribution, industrial power distribution, as well as control and protection for a variety of equipment with operating current not exceeding 125A.Key products series include:



NXB-40

40A and below single mode 1P + N Miniature Circuit Breaker
(IEC 60898-1)



NXB-63

63A and below Miniature Circuit Breaker
(IEC 60898-1)



NXB-63H

63A and below Miniature Circuit Breaker (IEC 60898-1)



NXB-80

80A and below 1P, 1P + N, 2P Miniature Circuit Breaker
(IEC 60898-1)



NXB-125

125A and below Molded Case Circuit Breaker
(IEC 60947-2)



NXB-125G

125A and below Miniature Circuit Breaker
(IEC 60898-1)

«Электро-Профи» - www.ep.ru

Residual current operated circuit breaker (RCBO)

It has the function of overload and short circuit protection, isolation and Earth leakage current protection, i.e., besides the protection function of Miniature Circuit Breaker, it can also serve as additional protection for direct or indirect electric leakage/shock or protective measures for electric fire. It is especially suited for places with low safety level, such as bathroom, swimming pool, plug socket or transformer.Key products series include:



NXBLE-40

40A and below 1P + N RCBO
(IEC 61009-1)



NXBLE-63Y

63A and below 1P + N RCBO
(IEC 61009-1)



NXBLE-32

32A and below RCBO
(IEC 61009-1)



NXBLE-63

63A and below RCBO
(IEC 61009-1)



NXBLE-125

125A and below RCBO
(IEC 60947-2)



NXBLE-125G

125A and below RCBO
(IEC 61009-1)

«Электро-Профи» - www.ep.ru

L

Accessories

A variety of additional features can be achieved with wide range of accessories when used with circuit breaker, such as alerts, shunt trip, under-voltage protection, etc. Usually the Max number of accessories assembled on the circuit breaker is three. Accessories with independent tripping function should be assembled first, such as shunt trip, and under-voltage trip, Followed by other accessories , such as auxiliary contacts, alarm auxiliary contacts.

Accessories that can be assembled with NXB-63 series (IEC 60947-5)



AX-X1

Auxiliary contacts



AL-X1

Alarm auxiliary contacts



SHT-X1

Shunt release



OVT-X1

Over-voltage release



UVT-X1

Under-voltage release



OUVT-X1

Over/under voltage release

«Электро-Профи» - www.ep.ru

Accessories for NXB-125 series (IEC 60947-5)



AX-X3

Auxiliary contacts



AL-X3

Alarm auxiliary contacts



SHT-X3

Shunt release



OVT-X3

Over-voltage release



UVT-X3

Under-voltage release



OUVT-X3

Over/under voltage release

«Электро-Профи» - www.ep.ru

L

Isolation switch

With isolation function, it is mainly used for isolation and functional disjunction of terminal power distribution.



NXHB-125

125A and below isolation switch (IEC 60947-3)

«Электро-Профи» - www.ep.ru

Circuit breaker and switch parameters

Product model		NXB-40	NXB-63	NXB-63H
Compliant standards		IEC60898-1	IEC60898-1	IEC60898-1
Rated current (A)		6~40	1~63	1~63
Rated voltage (V ~)		240	240/415	240/415
Rated frequency (Hz)		50	50	50
Number of poles		1P+N	1P, 1P+N, 2P, 3P, 3P+N, 4P	1P, 1P+N, 2P, 3P, 3P+N, 4P
Mechanical life (cycles)		20000	20000	20000
Electrical life (cycles)		10000	10000	10000
Rated short-circuit breaking capacity Ics (A)		4500	6000	10000
Short-circuit breaking capacity Icu (A)		4500	6000	7500
Rated impulse withstand voltage (1.2 / 50)(kV)		4	4	4
Dielectric test voltage (V)		(Power frequency 1 minute) 2000	(Power frequency 1 minute) 2000	(Power frequency 1 minute) 2000
Anti-humid and heat properties (IEC60068-2-30:55℃/90~96%,25℃/95~100%)		28 cycles	28 cycles	28 cycles
Terminals	Minimum cross section (mm^2)	1	1	1
	Maximum cross section (mm^2)	16	25	25
	Standard connection torque (N·m)	1.2	2	2
	Maximum withstand torque (N m)	1.8	2.5	2.5
	Wire insertion depth (mm)	10	12.5	12.5
Reference temperature for setting of thermal element (℃)		30	30	30
Ambient temperature (℃)		-35~+70	-35~+70	-35~+70
Ambient storage temperature (℃)		-35~+85	-35~+85	-35~+85
Applicable altitude (m)		2000	2000	2000
Electromagnetic trip type	Type B (3In ~ 5In)		■	■
	Type C (5In ~ 10In)	■	■	■
	Type D (10In ~ 16In)	■	■	■
	Type C (6.4In ~ 9.6In)			
	Type D (9.6In~14.4In)			
Derating factor with multiple products side by side (recommended value)		(0.9~0.95)In	(0.9~0.95)In	(0.9~0.95)In
		(0.86~0.80)In	(0.86~0.80)In	(0.86~0.80)In
		(0.78~0.76)In	(0.78~0.76)In	(0.78~0.76)In
		0.76In	0.76In	0.76In
Temperature compensation coefficient (recommended value)	Change for every 10℃ increase from the reference temp	-(0.04~0.07)In	-(0.03~0.05)In	-(0.04~0.07)In
	Change for every 10℃ decrease from the reference temp	+(0.04~0.07)In	+(0.03~0.08)In	+(0.04~0.08)In
Cable entry		Top or bottom entry	Top or bottom entry	Top or bottom entry
Mounting		TH35-7.5-rail mounting	TH35-7.5-rail mounting	TH35-7.5-rail mounting
Pollution degree		Pollution degree Ⅱ	Pollution degree Ⅱ	Pollution degree Ⅱ
Protection degree	Direct mounting	IP20	IP20	IP20
	Mounted in the distribution box	IP40	IP40	IP40
Accessories that can be assembled		AX-X1, AL-X1, SHT-X1, OVT-X1, UVT-X1, OUVT-X1	AX-X1, AL-X1, SHT-X1, OVT-X1, UVT-X1, OUVT-X1	AX-X1, AL-X1, SHT-X1, OVT-X1, UVT-X1, OUVT-X1

«Электро-Профи» - www.ep.ru

L

NXB-80	NXB-125	NXB-125G	NXHB-125
IEC60898-1	IEC60947-2	IEC60898-1	IEC60947-3
80	63~125	63、80、100(1P、2P、3P、4P), 125(1P、2P)	63~125
240	240/415	240/415	240/415
50	50	50	50
1P, 1P+N, 2P	1P, 2P, 3P, 4P	1P, 2P, 3P, 4P	1P, 2P, 3P, 4P
20000	20000	20000	10000
10000	6000(In≤100A), 4000(In>100A)	6000(In≤100A), 4000(In>100A)	3000
6000	10000	10000	20Ie
6000	7500	7500	3Ie
4	4	4	6
(Power frequency 1 minute) 2000	(Power frequency 1 minute) 1890	(Power frequency 1 minute) 2000	(Power frequency 1 minute) 1890
28 cycles	28 cycles	28 cycles	28 cycles
1	16	16	1
25	50	50	50
2	3.5	3.5	3.5
3	4	4	4
12.5	15	15	15
30	30	30	30
-35~+70	-35~+70	-35~+70	-35~+70
-35~+85	-35~+85	-35~+85	-35~+85
2000	2000	2000	2000
■		■	
■		■	
■		■	
	■		
	■		
(0.9~0.95)In			
(0.86~0.80)In			
(0.78~0.76)In			
0.76In			
-(0.03~0.05)In	-(0.03~0.05)In	-(0.03~0.05)In	
+(0.04~0.07)In	+(0.04~0.07)In	+(0.04~0.07)In	
Top or bottom entry	Top or bottom entry	Top or bottom entry	Top or bottom entry
TH35-7.5-rail mounting	TH35-7.5-rail mounting	TH35-7.5-rail mounting	TH35-7.5-rail mounting
Pollution degree Ⅱ	Pollution degree Ⅲ	Pollution degree Ⅲ	Pollution degree Ⅱ
IP20	IP20	IP20	IP20
IP40	IP40	IP40	IP40
AX-X1, AL-X1, SHT-X1, OVT-X1, UVT-X1, OUVT-X1	AX-X3, AL-X3, SHT-X3, OVT-X3, UVT-X3, OUVT-X3	AX-X3, AL-X3, SHT-X3, OVT-X3, UVT-X3, OUVT-X3	

«Электро-Профи» - www.ep.ru

Residual current operated circuit breaker parameter

Product model		NXBLE-40	NXBLE-63Y
Compliant standards		IEC61009-1	IEC61009-1
Rated current (A)		6~40	6~63
Rated residual operating current (A)		0.01, 0.03	0.01, 0.03
Leakage protection type		AC	AC
Rated voltage (V ~)		240	240
Rated frequency (Hz)		50	50
Number of poles		1P+N	1P+N
Mechanical life (cycles)		20000	20000
Electrical life (cycles)		10000	10000
Rated short-circuit breaking capacity (A)		4500	4500
Short-circuit breaking capacity (A)		4500	4500
Rated impulse withstand voltage (1.2 / 50)(kV)		4	4
Dielectric test voltage (V)		(Power frequency 1 minute) 2000	(Power frequency 1 minute) 2000
Anti-humid and heat properties (IEC60068-2-30:55℃/90~96%,25℃/95~100%)		28 cycles	28 cycles
Terminals	Minimum cross section (mm^2)	1	1
	Maximum cross section (mm^2)	16	25
	Standard connection torque (N·m)	1.2	2
	Maximum withstand torque (N m)	1.8	2.5
	Wire insertion depth (mm)	10	12.5
Reference temperature for setting of thermal element (℃)		30	30
Ambient working temperature (℃)		-35~+70	-35~+70
Ambient storage temperature (℃)		-35~+85	-35~+85
Applicable altitude (m)		2000	2000
Electromagnetic trip type	Type B (3In ~ 5In)		
	Type C (5In ~ 10In)	■	■
	Type D (10In ~ 20In)	■	■
	Type C (6.4In ~ 9.6In)		
	Type D (9.6In~14.4In)		
Derating factor with multiple products side by side (recommended value)	≤3	(0.9~0.95）In	(0.9~0.95）In
	4 ~ 6	(0.86~0.80)In	(0.86~0.80)In
	7 ~ 9	(0.78~0.76)In	(0.78~0.76)In
	>9	0.76In	0.76In
Temperature compensation coefficient (recommended value)	Change for every 10℃ increase from the reference temp	-(0.03~0.050)In	-(0.03~0.050)In
	Change for every 10℃ decrease from the reference temp	-(0.04~0.07)In	-(0.04~0.07)In
Cable entry		Top-in, Bottom-out	Top-in, Bottom-out
Mounting		TH35-7.5-rail mounting	TH35-7.5-rail mounting
Pollution degree		Pollution degree Ⅱ	Pollution degree Ⅱ
Protection class	Direct mounting	IP20	IP20
	Mounted in the distribution box	IP40	IP40
Accessories that can be assembled		AX-X1, AL-X1, SHT-X1, OVT-X1, UVT-X1, OUVT-X1	AX-X1, AL-X1, SHT-X1, OVT-X1, UVT-X1, OUVT-X1

«Электро-Профи» - www.ep.ru

L

NXBLE-32	NXBLE-63	NXBLE-125	NXBLE-125G
IEC61009-1	IEC61009-1	IEC60947-2	IEC61009-1
6~32	6~63	63、80、100(1P+N、2P、3P、3P+N、4P)125(1P+N、2P)	63~125
0.03, 0.05, 0.075, 0.1, 0.3	0.03, 0.05, 0.075, 0.1, 0.3	0.03, 0.05, 0.075, 0.1, 0.3	0.03, 0.05, 0.075, 0.1, 0.3
AC	AC	AC	AC
240/415	240/415	240/415	240/415
50	50	50	50
1P+N, 2P, 3P, 3P+N, 4P	1P+N, 2P, 3P, 3P+N, 4P	1P+N, 2P, 3P, 3P+N, 4P	1P+N, 2P, 3P, 3P+N, 4P
20000	20000	20000	20000
10000	10000	6000(In≤100A), 4000(In>100A)	6000(In≤100A), 4000(In>100A)
6000	6000	10000	10000
6000	6000	7500	7500
4	4	4	4
(Power frequency 1 minute) 2000	(Power frequency 1 minute) 2000	(Power frequency 1 minute) 1890	(Power frequency 1 minute) 2000
28 cycles	28 cycles	28 cycles	28 cycles
1	1	16	16
25	16	50	50
2	2	3.5	3.5
2.5	2.5	4	4
12.5	10	15	15
30	30	30	30
-35~+70	-35~+70	-35~+70	-35~+70
-35~+85	-35~+85	-35~+85	-35~+85
2000	2000	2000	2000
■	■		■
■	■		■
■	■		■
		■	
		■	
(0.9~0.95) In	(0.9~0.95) In	(0.9~0.95) In	(0.9~0.95) In
(0.86~0.80)In	(0.86~0.80)In	(0.86~0.80)In	(0.86~0.80)In
(0.78~0.76)In	(0.78~0.76)In	(0.78~0.76)In	(0.78~0.76)In
0.76In	0.76In	0.76In	0.76In
-(0.03~0.050)In	-(0.03~0.050)In	-(0.03~0.050)In	-(0.03~0.050)In
-(0.04~0.07)In	-(0.04~0.08)In	-(0.04~0.07)In	-(0.04~0.07)In
Top-in, Bottom-out	Top-in, Bottom-out	Top-in, Bottom-out	Top-in, Bottom-out
TH35-7.5-rail mounting	TH35-7.5-rail mounting	TH35-7.5-rail mounting	TH35-7.5-rail mounting
Pollution degree Ⅱ	Pollution degree Ⅱ	Pollution degree Ⅲ	Pollution degree Ⅲ
IP20	IP20	IP20	IP20
Ip40	IP40	IP40	IP40
AX-X1, AL-X1, SHT-X1, OVT-X1, UVT-X1, OUVT-X1	AX-X1, AL-X1, SHT-X1, OVT-X1, UVT-X1, OUVT-X1	AX-X3, AL-X3	AX-X3, AL-X3

«Электро-Профи» - www.ep.ru

Tripping characteristics are in compliant with standard IEC60898-1 and IEC61009-1

Test	Type	Test current	Starting state	Trip/Not trip time limit	Expected outcome	Notes
a	B,C,D	1.13In	Cold	t≤1 h(for In≤63A) t < 2 h(for In > 63A)	Not trip	
b	B,C,D	1.45In	Right after test	t < 1 h(for In≤63A) t < 2 h(for In > 63A)	Trip	Current increase steadily within 5s
c	B,C,D	2.55In	Right after test	1s < t < 60s (for In≤32A) 1s < t < 120s (for In > 32A)	Trip	
d	B C D	3In 5In 10In	Cold	t≤0.1s	Not trip	Connect the current by closing the auxiliary switch
e	B C D	5In 10In 20In	Cold	t < 0.1s	Trip	Connect the current by closing the auxiliary switch

Tripping characteristics are in compliant with standard IEC60947-2

Release type	Test current	Starting state	Trip/Not trip time limit	Expected outcome	Notes
C,D	1.05In	Cold	t≤1 h(for In≤63A)	Not trip	
			t≤2 h(for In > 63A)		
C,D	1.3In	Right after test	t < 1 h(for In≤63A)	Trip	Current increase steadily within 5s
			t < 2 h(for In > 63A)		
C,D	2In	Cold	t < 900s	Trip	
C	6.4In	Cold	t≤0.2s	Not trip	Connect the current by closing the auxiliary switch
D	9.6In				
C	9.6In	Cold	t < 0.2s	Trip	
D	14.4In				

Tripping curve

Compliant with standard IEC60898-1 and IEC61009-1

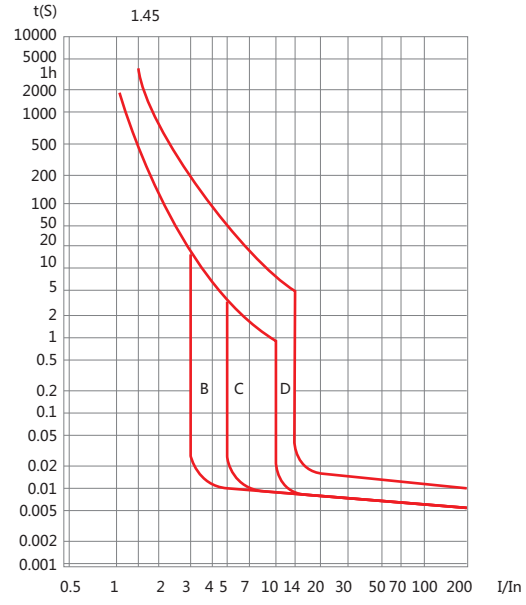

Compliant with standard IEC60947-2

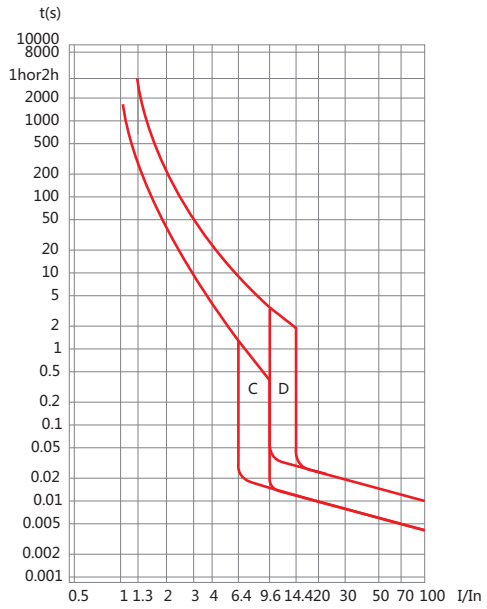

«Электро-Профи» - www.ep.ru

The following table shows the cross-sectional area of the copper wire corresponding to the rated current (recommended value):

Copper wire cross-sectional area Smm²	Rated current In(A)
1	In≤6
1.5	6＜In≤13
2.5	13＜In≤20
4	20＜In≤25
6	25＜In≤32
10	32＜In≤50
16	50＜In≤63
25	63＜In≤80
35	80＜In≤100
50	100＜In≤125

«Электро-Профи» - www.ep.ru

Circuit breakers

Product model	Number of poles	Electromagnetic release type	Rated current	Rated residual operating current
NXB-40	1P+N	C, D	6A, 10A, 16A, 20A, 25A, 32A, 40A	
NXBLE-40				0.01A, 0.03A
NXB-63	1P, 1P+N, 2P, 3P, 3P+N, 4P	B, C, D	1A, 2A, 3A, 4A, 6A, 10A, 16A, 20A, 25A, 32A, 40A, 50A, 63A	
NXBLE-32	1P+N, 2P, 3P, 3P+N, 4P	B, C, D	6A, 10A, 16A, 20A, 25A, 32A	0.03A, 0.05A, 0.075A, 0.1A, 0.3A
NXBLE-63			6A, 10A, 16A, 20A, 25A, 32A, 40A, 50A, 63A	
NXBLE-63Y	1P+N	C, D	6A, 10A, 16A, 20A, 25A, 32A, 40A, 50A, 63A	0.01A, 0.03A
NXB-80	1P, 1P+N, 2P	B, C, D	80A	
NXB-125	1P, 2P,	C, D	63A, 80A, 100A, 125A	
NXB-125G	3P, 4P	B, C, D	63A, 80A, 100A	
NXBLE-125	1P+N, 2P,	C, D	63A, 80A, 100A, 125A	0.03A, 0.05A, 0.075A, 0.1A, 0.3A
NXBLE-125G	3P, 3P+N, 4P	B, C, D	63A, 80A, 100A	

Ordering example: NXB-40 C16 50 units
NXB-63 3P D63 50 units
NXBLE-63 1P+N C63 0.03A 30 units

«Электро-Профи» - www.ep.ru

L

Miniature circuit breaker

NXB-63 Miniature circuit breaker P-015
NXB-63H Miniature circuit breaker P-016
NXB-80 Miniature circuit breaker P-017
NXB-40 Miniature circuit breaker P-018
NXB-125 Moulded case circuit breaker P-019
NXB-125G Miniature circuit breaker P-020

Residual current operated circuit breaker (RCBO)

NXBLE-32 Residual current operated circuit breaker (RCBO) P-021
NXBLE-63 Residual current operated circuit breaker (RCBO) P-022
NXBLE-63Y Residual current operated circuit breaker (RCBO) P-023
NXBLE-40 Residual current operated circuit breaker (RCBO) P-024
NXBLE-125 Residual current operated circuit breaker (RCBO) P-025
NXBLE-125G Residual current operated circuit breaker (RCBO) P-026

Accessories

AX-X1 Auxiliary contact P-027
AL-X1 Alarm auxiliary contact P-029
SHT-X1 Shunt release P-031
OVT-X1 Overvoltage release P-033
UVT-X1 Under-voltage release P-034
OUVT-X1 Over/under voltage release P-035
AX-X3 Auxiliary contact P-037
AL-X3 Alarm auxiliary contact P-039
SHT-X3 Shunt release P-041
OVT-X3 Overvoltage release P-043
UVT-X3 Under-voltage release P-044
OUVT-X3 Over/under voltage release P-045

Isolation switch

NXHB-125 Isolation switch P-046

«Электро-Профи» - www.ep.ru



NXB-63 Miniature circuit breaker

1. Compliant standards

IEC60898-1

2. Compliant certification

CE

3. Major function

Overload protection, short circuit protection, positive isolation

4. Technical parameters

Rated current: 1A, 2A, 3A, 4A, 6A, 10A, 16A, 20A, 25A, 32A, 40A, 50A, 63A;
Rated voltage: 220V~/230V~/240V ~ (1P, 1P+N), 380V~/400V~/415V ~ (2 ~ 4P, 3P+N);
Frequency: 50;
Electromagnetic release type: B, C, D;
Number of poles: 1P, 1P+N, 2P, 3P, 3P+N, 4P;
Mechanical life: 20000 cycles;
Electrical life: 10000 cycles;
Rated short-circuit breaking capacity(Icn): 6000A;
Short-circuit breaking capacity (Ics): 6000A;
Rated impulse withstand voltage (Uimp): 4kV;
Power consumption on each pole of the circuit breaker: see Table 1.

Table 1

Rated current In (A)	Maximum power consumption per pole (W)
1~10	3
16	3.5
20~25	4.5
32	6
40	7.5
50	9
63	13

5. Dimensions and installation sizes

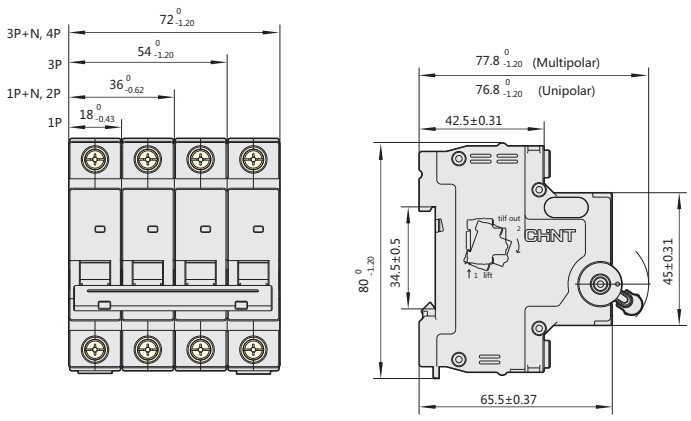

«Электро-Профи» - www.ep.ru

L









NXB-63H Miniature circuit breaker

1. Compliant standards

IEC60898-1

2. Compliant certification

CCC,CE,SII,SNI

3. Major function

Overload protection, short circuit protection , positive isolation

4. Technical parameters

Rated current: 1A, 2A, 3A, 4A, 6A, 10A, 16A, 20A, 25A, 32A, 40A, 50A, 63A,;
Rated voltage: 240V ~ (1P, 1P+N), 415V ~ (2 ~ 4P, 3P+N);
Frequency: 50Hz;
Electromagnetic release type: B, C, D;
Number of poles: 1P, 1P+N, 2P, 3P, 3P+N, 4P;
Mechanical life: 20000 cycles;
Electrical life: 10000 cycles;
Rated short-circuit breaking capacity: 10000A;
Short-circuit breaking capacity: 7500A;
Rated impulse withstand voltage: 4kV;
Power consumption on each pole of the circuit breaker: see Table 1.

Table 1

Rated current In (A)	Maximum power consumption per pole (W)
1~10	3
16~32	3.5
40~63	7.5

5. Dimensions and installation sizes

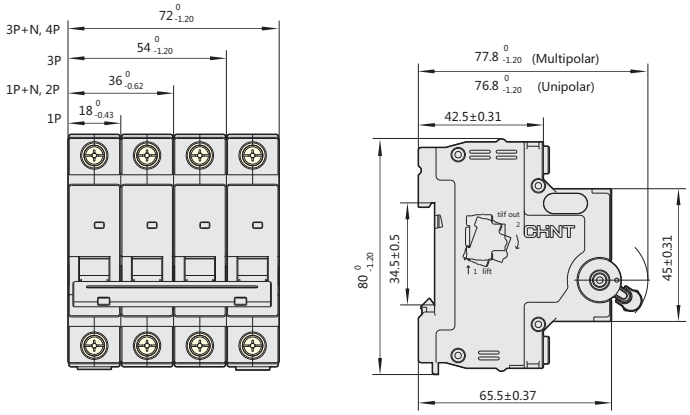

«Электро-Профи» - www.ep.ru



NXB-80 Miniature circuit breaker (coming soon)

1. Compliant standards

IEC60898-1

2. Compliant certification

CE

3. Major function

Overload protection, short circuit protection , positive isolation

4. Technical parameters

Rated current: 80A;
Rated voltage: 240V ~;
Frequency: 50;
Electromagnetic release type: B, C, D;
Number of poles: 1P, 1P+N, 2P;
Mechanical life: 20000 cycles;
Electrical life: 10000 cycles;
Rated short-circuit breaking capacity: see Table 1;
Short-circuit breaking capacity: see Table 1;
Rated impulse withstand voltage Uimp(kV): 4;
Power consumption on each pole of the circuit breaker: ≤ 6.5W

Table 1

Model	Number of poles	Rated voltage	Rated short-circuit breaking capacity	Short-circuit breaking capacity
NXB-80	1P, 1P+N	240V	6000A	6000A
	2P	240V	6000A	6000A

5. Dimensions and installation sizes

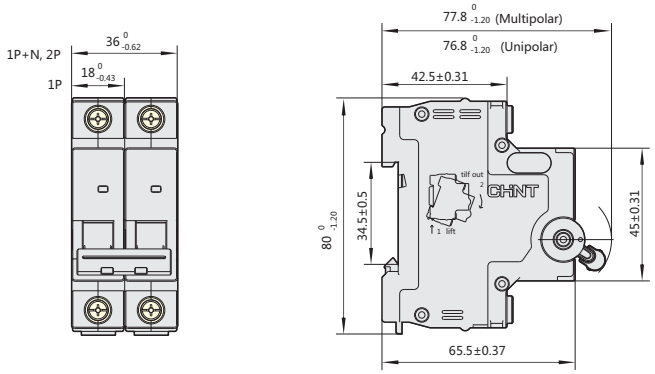

«Электро-Профи» - www.ep.ru

L



NXB-40 Miniature circuit breaker

1. Compliant standards

IEC60898-1

2. Compliant certification

CE

3. Major function

Overload protection, short circuit protection, positive isolation

4. Technical parameters

Rated current: 6A, 10A, 16A, 20A, 25A, 32A, 40A;
Rated voltage: 240V;
Frequency: 50Hz;
Electromagnetic release type: C, D;
Number of poles: 1P+N;
Mechanical life: 20000 cycles;
Electrical life: 10000 cycles;
Rated short-circuit breaking capacity(Icu): 4500A;
Short-circuit breaking capacity(Ics): 4500A;
Rated impulse withstand voltage(Uimp): 4kV;
Power consumption on each pole of the circuit breaker: see Table 1.

Table 1

Rated current In (A)	Maximum power consumption per pole (W)
1~10	2
16~32	3.5
40~63	5

5. Dimensions and installation sizes

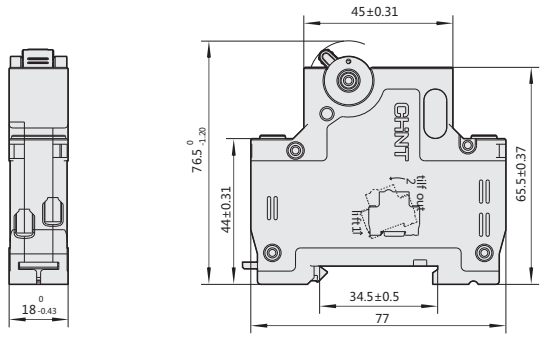

«Электро-Профи» - www.ep.ru



NXB-125 Moulded case circuit breaker

1. Compliant standards

IEC60947-2

2. Compliant certification

CE

3. Major function

Overload protection, short circuit protection, positive isolation

4. Technical parameters

Rated current: 63A, 80A, 100A, 125A;
Rated voltage: 240V ~ (1P), 415V ~ (2P, 3P, 4P);
Frequency: 50Hz;
Electromagnetic release type: C, D;
Number of poles: 1P, 2P, 3P, 4P;
Mechanical life: 20000 cycles;
Electrical life: 6000 cycles (In≤100A); 4000 cycles (In > 100A);
Rated short-circuit breaking capacity(Icu): 10000A;
Short-circuit breaking capacity(Ics): 7500A;
Rated impulse withstand voltage(Uimp): 4kV;
Power consumption on each pole of the circuit breaker: see Table 1.

5. Dimensions and installation sizes

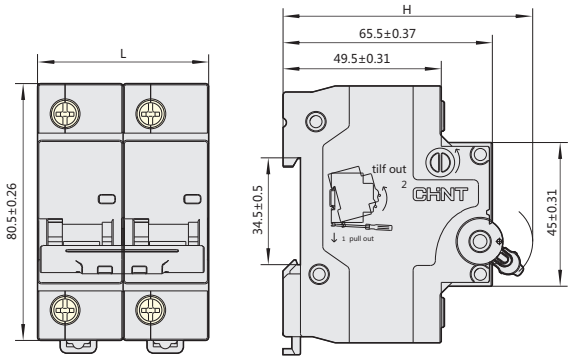

	1P	2P	3P	4P
L(mm)	$27^{0}_{-0.52}$	$54^{0}_{-0.74}$	$81^{0}_{-1.40}$	$108^{0}_{-1.40}$
H(mm)	$75.5^{0}_{-1.20}$	$78.5^{0}_{-1.20}$	$78.5^{0}_{-1.20}$	$78.5^{0}_{-1.20}$

«Электро-Профи» - www.ep.ru

L



NXB-125G Miniature circuit breaker

1. Compliant standards

IEC60898-1

2. Compliant certification

CE

3. Major function

Overload protection, short circuit protection, positive isolation

4. Technical parameters

Rated current: 63, 80, 100(1P, 2P, 3P, 4P), 125(1P, 2P);
Rated voltage: 240V ~ (1P), 415V ~ (2P, 3P, 4P);
Frequency: 50Hz;
Electromagnetic release type: B, C, D;
Number of poles: 1P, 2P, 3P, 4P;
Mechanical life: 20000 cycles;
Electrical life: 6000 cycles (In≤100A); 4000 cycles (In > 100A);
Rated short-circuit breaking capacity(Icn): 10000A;
Short-circuit breaking capacity(Ics): 7500A;
Rated impulse withstand voltage(Uimp): 4kV;
Power consumption on each pole of the circuit breaker: see Table 1.

Table 1

Rated current In (A)	Maximum power consumption per pole (W)
63	3.5
80	5.5
100	7.5
125	11.5

5. Dimensions and installation sizes

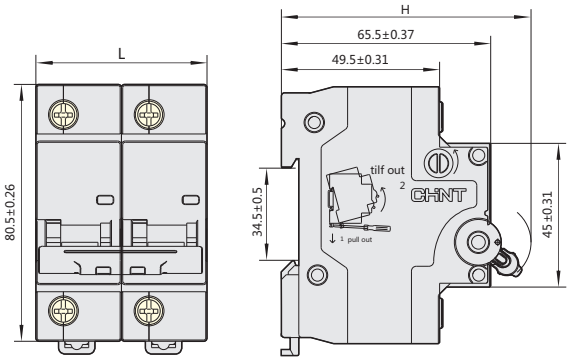

	1P	2P	3P	4P
L(mm)	$27^{0}_{-0.52}$	$54^{0}_{0.74}$	$81^{0}_{-1.40}$	$108^{0}_{-1.40}$
H(mm)	$75.5^{0}_{-1.20}$	$78.5^{0}_{-1.20}$	$78.5^{0}_{-1.20}$	$78.5^{0}_{-1.20}$

«Электро-Профи» - www.ep.ru



NXBLE-32 Residual current operated circuit breaker (RCBO)

1. Compliant standards

IEC61009-1

2. Compliant certification

CE

3. Major function

Overload protection, short circuit protection, positive isolation, residual current operation

4. Technical parameters

Rated current: 6A, 10A, 16A, 20A, 25A, 32A;
Rated residual operating current: 0.03A, 0.05A, 0.075A, 0.1A, 0.3A;
Rated voltage: 240V ~ (1P+N, 2P), 415V ~ (3P, 3P+N, 4P);
Frequency: 50Hz;
Electromagnetic release type: B, C, D;
Number of poles: 1P+N, 2P, 3P, 3P+N, 4P;
Mechanical life: 20000 cycles;
Electrical life: 10000 cycles;
Rated short-circuit breaking capacity(Icu): 6000A;
Short-circuit breaking capacity(Ics): 6000A;
Rated impulse withstand voltage(Uimp): 4kV.

5. Dimensions and installation sizes

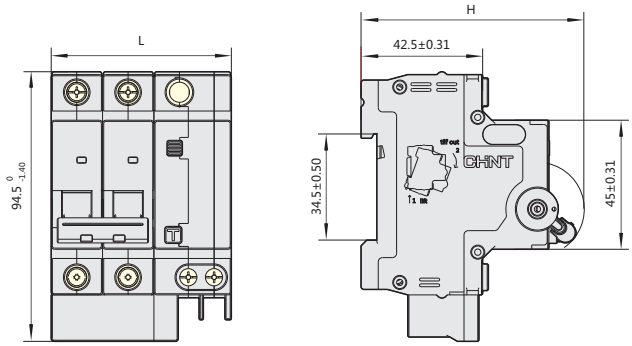

	1P+N	2P	3P	3P+N	4P
L(mm)	$45^{0}_{-0.62}$	$63^{0}_{-0.74}$	$90^{0}_{-1.40}$	$99^{0}_{-1.40}$	$117^{0}_{-1.40}$
H(mm)	$76.8^{0}_{-1.20}$	$77.8^{0}_{-1.20}$	$77.8^{0}_{-1.20}$	$77.8^{0}_{-1.20}$	$77.8^{0}_{-1.20}$

«Электро-Профи» - www.ep.ru

L



NXBLE-63 Residual current operated circuit breaker (RCBO)

1. Compliant standards

IEC61009-1

2. Compliant certification

CE

3. Major function

Overload protection, short circuit protection, isolation, residual current operation

4. Technical parameters

Rated current: 6A, 10A, 16A, 20A, 25A, 32A, 40A, 50A, 63A;
Rated residual operating current: 0.03A, 0.05A, 0.075A, 0.1A, 0.3A;
Rated voltage: 240V ~ (1P+N, 2P), 415V ~ (3P, 3P+N, 4P);
Frequency: 50Hz;
Electromagnetic release type: B, C, D;
Number of poles: 1P+N, 2P, 3P, 3P+N, 4P;
Mechanical life: 20000 cycles;
Electrical life: 10000 cycles;
Rated short-circuit breaking capacity(Icu): 6000A;
Short-circuit breaking capacity(Ics): 6000A;
Rated impulse withstand voltage(Uimp): 4kV;

5. Dimensions and installation sizes

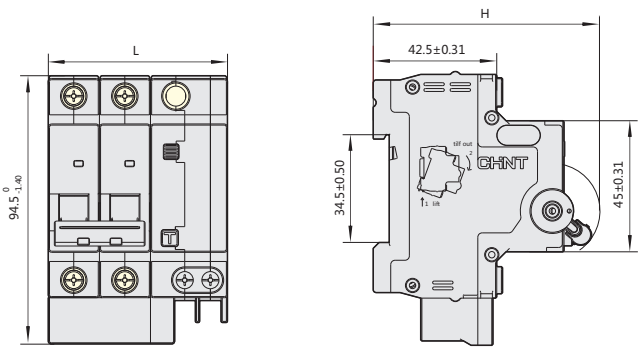

	1P+N	2P	3P	3P+N	4P
L(mm)	54 $^{0}_{-0.74}$	72 $^{0}_{-0.74}$	103.5 $^{0}_{-1.40}$	117 $^{0}_{-1.40}$	135 $^{0}_{-1.60}$
H(mm)	76.8 $^{0}_{-1.20}$	77.8 $^{0}_{-1.20}$	77.8 $^{0}_{-1.20}$	77.8 $^{0}_{-1.20}$	77.8 $^{0}_{-1.20}$

«Электро-Профи» - www.ep.ru



NXBLE-63Y Residual current operated circuit breaker (RCBO)

1. Compliant standards

IEC61009-1

2. Compliant certification

CE

3. Major function

Overload protection, short circuit protection, isolation, residual current operation

4. Technical parameters

Rated current: 6A, 10A, 16A, 20A, 25A, 32A, 40A, 50A, 63A;
Rated residual operating current: 0.01A, 0.03A;
Rated voltage: 240V ~ ;
Frequency: 50Hz;
Electromagnetic release type: C, D;
Number of poles: 1P+N;
Mechanical life: 20000 cycles;
Electrical life: 10000 cycles;
Rated short-circuit breaking capacity(Icu): 4500A;
Short-circuit breaking capacity(Ics): 4500A;
Rated impulse withstand voltage(Uimp): 4kV;

5. Dimensions and installation sizes

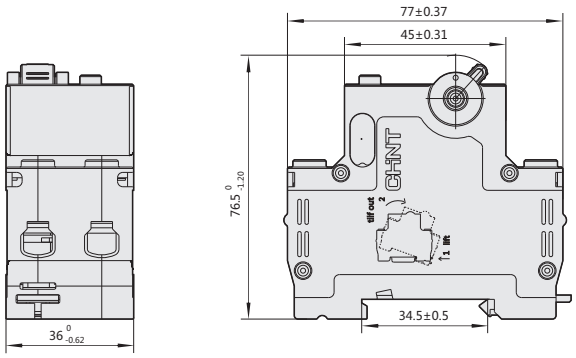

«Электро-Профи» - www.ep.ru

L



NXBLE-40 Residual current operated circuit breaker (RCBO)

1. Compliant standards

IEC61009-1

2. Compliant certification

CE

3. Major function

Overload protection, short circuit protection, isolation, residual current operation

4. Technical parameters

Rated current: 6A, 10A, 16A, 20A, 25A, 32A, 40A;
Rated residual operating current: 0.01A, 0.03A;
Rated voltage: 240V ~ ;
Frequency: 50Hz;
Electromagnetic release type: C, D;
Number of poles: 1P+N;
Mechanical life: 20000 cycles;
Electrical life: 10000 cycles;
Rated short-circuit breaking capacity(Icu): 4500A;
Short-circuit breaking capacity(Ics): 4500A;
Rated impulse withstand voltage(Uimp): 4kV.

5. Dimensions and installation sizes

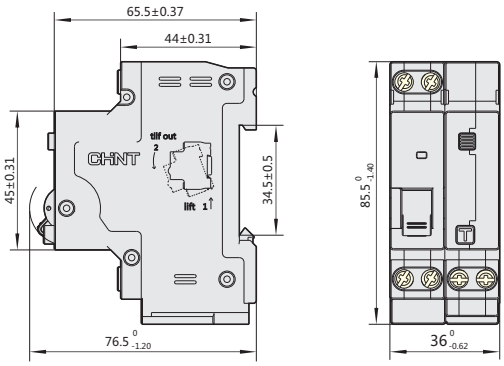

«Электро-Профи» - www.ep.ru



NXBLE-125 Residual current operated circuit breaker (RCBO)

1. Compliant standards

IEC60947-2

2. Compliant certification

CE

3. Major function

Overload protection, short circuit protection, isolation, residual current operation

4. Technical parameters

Rated current: 63, 80, 100 (1P+N, 2P, 3P, 3P+N, 4P), 125 (1P+N, 2P);
Rated residual operating current: 0.03A, 0.05A, 0.075A, 0.1A, 0.3A;
Rated voltage: 240V ~ (1P+N, 2P), 415V ~ (3P, 3P+N, 4P);
Frequency: 50Hz;
Electromagnetic release type: C, D;
Number of poles: 1P+N, 2P, 3P, 3P+N, 4P;
Mechanical life: 20000 cycles;
Electrical life: 6000 cycles (In≤100A); 4000 cycles (In> 100A);
Rated short-circuit breaking capacity(Icu): 10000A;
Short-circuit breaking capacity(Ics): 7500A;
Rated impulse withstand voltage(Uimp): 4kV.

5. Dimensions and installation sizes

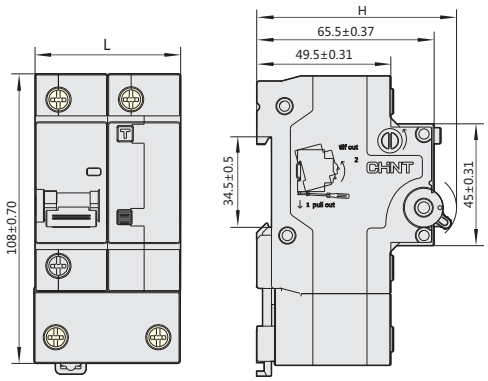

	1P+N	2P	3P	4P
L(mm)	$54^{0}_{-0.74}$	$81^{0}_{-0.87}$	$108^{0}_{-1.40}$	$135^{0}_{-1.60}$
H(mm)	$75.5^{0}_{-1.20}$	$78.5^{0}_{-1.20}$	$78.5^{0}_{-1.20}$	$78.5^{0}_{-1.20}$

«Электро-Профи» - www.ep.ru

L



NXBLE-125G Residual current operated circuit breaker (RCBO)

1. Compliant standards

IEC61009-1

2. Compliant certification

CE

3. Major function

Overload protection, short circuit protection, isolation, residual current operation

4. Technical parameters

Rated current: 63, 80, 100 (1P+N, 2P, 3P, 3P+N、4P), 125 (1P+N, 2P);
Rated residual operating current: 0.03A, 0.05A, 0.075A, 0.1A, 0.3A;
Rated voltage: 240V ~ (1P+N, 2P), 415V ~ (3P, 3P+N, 4P);
Frequency: 50/60Hz;
Electromagnetic release type: B, C, D;
Number of poles: 1P+N, 2P, 3P, 3P+N, 4P;
Mechanical life: 20000 cycles;
Electrical life: 6000 cycles (In≤100A); 4000 cycles (In > 100A);
Rated short-circuit breaking capacity(Icn): 10000A;
Short-circuit breaking capacity(Ics): 7500A;
Rated impulse withstand voltage(Uimp): 4kV.

5. Dimensions and installation sizes

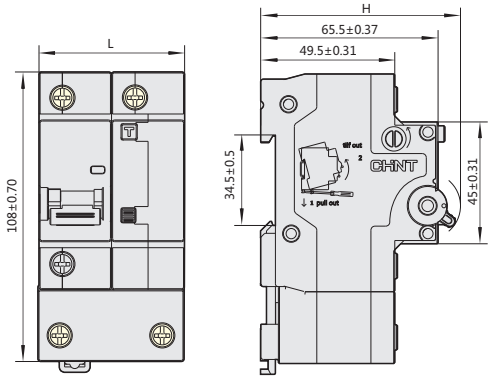

	1P+N	2P	3P	4P
L(mm)	$54^{0}_{-0.74}$	$81^{0}_{-0.87}$	$108^{0}_{-1.40}$	$135^{0}_{-1.60}$
H(mm)	$75.5^{0}_{-1.20}$	$78.5^{0}_{-1.20}$	$78.5^{0}_{-1.20}$	$78.5^{0}_{-1.20}$

«Электро-Профи» - www.ep.ru



AX-X1 Auxiliary contact

1. Compliant standards

IEC60947-5

2. Compliant certification

CE

3. Major function

To achieve long-distance signal indication for the open/close status of the circuit breaker

4. Parameters and performance

Table 1

Utilization category	Rated operating voltage V	Rated operating current A
AC-12	AC 415	3
	AC 240	6
DC-12	DC 130	1
	DC 48	2
	DC 24	6

Figure 1

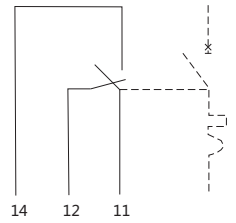

Action characteristics: Figure 1 shows the wiring diagram for auxiliary contacts.
When the auxiliary contacts is open, terminals 11 and 12 are connected;
When the auxiliary contacts is closed, terminals 11 and 14 are connected.
Life: Operating life of auxiliary contacts is ≥ 10000 cycles.

5. Assembly and installation of the product

Can be assembled with NXB-63, NXB-40 series circuit breakers, with assembly diagram shown below:

Figure 2

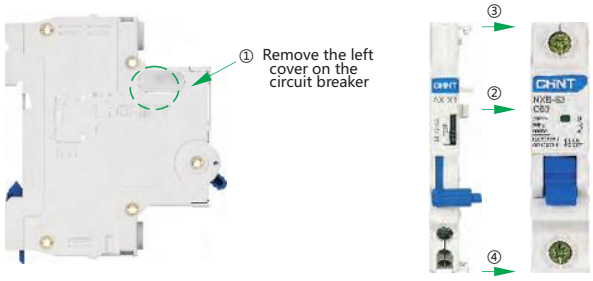

After AX-X1 is assembled with the circuit breaker, mount them on the TH3.5-7.5 steel mounting rail.

«Электро-Профи» - www.ep.ru

L

6. Dimensions and installation sizes

Figure 3

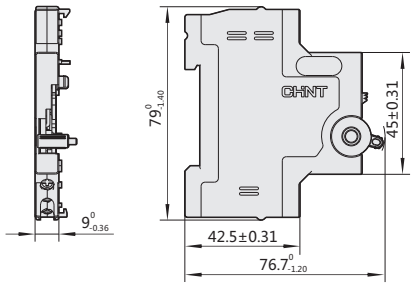

«Электро-Профи» - www.ep.ru



AL-X1 Alarm auxiliary contact

1. Compliant standards

IEC60947-5

2. Compliant certification

CE

3. Major function

To achieve signal indication over long distance for open/close status of the circuit breaker and alarm.

4. Parameters and performance

Table 1

Utilization category	Rated operating voltage V	Rated operating current A
AC-12	AC 415	3
	AC 240	6
DC-12	DC 130	1
	DC 48	2
	DC 24	6

Action characteristics: Figure 1 shows the wiring diagram for auxiliary contact.When the auxiliary contact is open, terminals 91 and 94 are connected;When the auxiliary contact is closed, terminals 91 and 92 are connected. When the alarm auxiliary contact is closed, and manually opened with the handle, terminals 91 and 92 shall still be connected; when the alarm auxiliary contact is closed, and the assembled circuit trip is open due to error, terminals 91 and 92 shall be open, and terminals 91 and 94 shall be connected; Life: Operating life of alarm auxiliary contact is ≥ 10000 cycles.

Figure 1

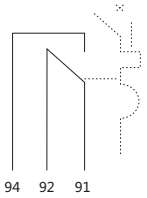

«Электро-Профи» - www.ep.ru

L

5. Assembly and installation of the product

Can be assembled with NXB-63, NXB-40 series circuit breakers, with assembly diagram shown below:

Figure 2

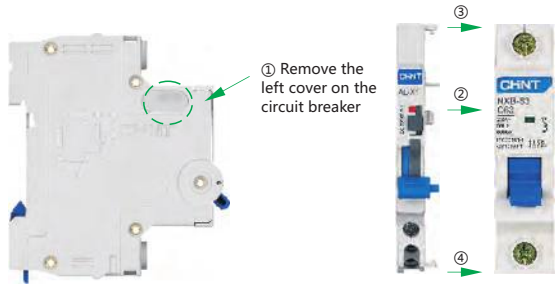

After AL-X1 is assembled with the circuit breaker, mount them on the TH3.5-7.5 steel mounting rail.

6. Dimensions and installation sizes

Figure 3

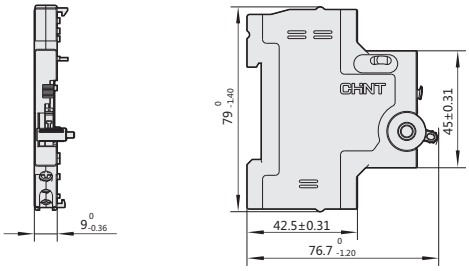

«Электро-Профи» - www.ep.ru



SHT-X1 Shunt release

1. Major function

To be assembled with the circuit breaker to achieve remote shunt trip.

2. Parameters and performance

Rated insulation voltage (Ui): 500V;
Rated operation current under different rated operation voltage (see Table 1):
Utilization category: AC-12, DC-12.

Table 1

Rated operating voltage (V)	Rated operating current (A)
AC 415	3
AC 240	6
AC/DC 48	3
AC/DC 24	6

Action characteristics: within the range of 70% ~ 110% of the rated control supply voltage, the release should operate reliably to open the circuit breaker. Figure 1 shows the wiring diagram for the release. When the release is open, terminal C2 and 12 shall be connected, and the external security indicator shall light up; when the release is closed, terminal C2 and 14 shall be connected, and the external warning indicator shall light up; when the release is closed, and the external button is connected, the release shall trip and drive the circuit breaker to trip and be opened. Meanwhile, the release indicator shall display trip mark. Mechanical life: operating life of the release is ≥ 4000 cycles.

Figure 1

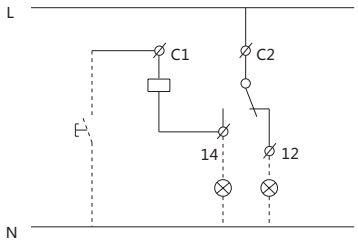

«Электро-Профи» - www.ep.ru

L

3. Assembly and installation of the product

SHT-X1 can be assembled with NXB-63 or NXB-40 series circuit breaker, with the assembly diagram shown below:

Figure 2

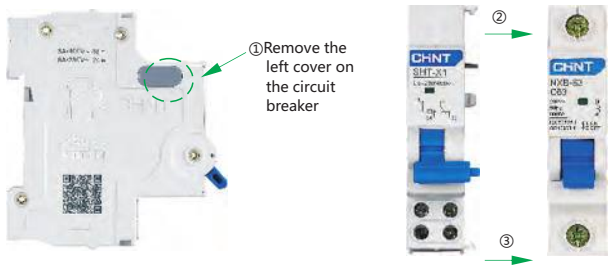

After SHT-X1 is assembled with the circuit breaker, mount them on TH35-7.5 steel mounting rail.

4. Dimensions and installation sizes

Figure 3

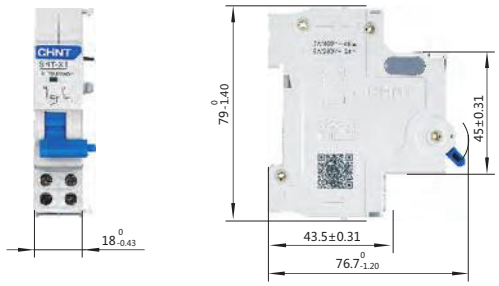

«Электро-Профи» - www.ep.ru



OVT-X1 Overvoltage release

1. Major function

To be assembled with the circuit breaker to achieve overvoltage protection.

2. Parameters and performance

Rated operation voltage Ue: AC 240V 50Hz (or 60Hz).
Rated insulation voltage Ui: 500V.
Overvoltage setting value Uvo: 280V.
Release action characteristics: when the main circuit voltage is in the range of (85% ~ 110%) Ue, the release shall be able to keep the circuit breaker to work reliably for long term. When the main circuit voltage is increased to 280 (1 ± 5%) V, the release assembled with NXB-63 series circuit breaker should act and trip open NXB-63 circuit breaker.
Mechanical and electrical life: the mechanical and electrical life of release is ≥4000 operation cycles.

3. Assembly and installation of the product

OVT-X1 can be assembled with NXB-63 or NXB-40 series circuit breaker, with the assembly diagram shown below:

Figure 1

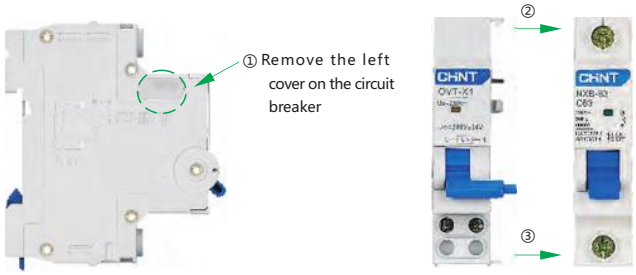

After the release is assembled with the circuit breaker, mount them on TH35-7.5 steel mounting rail.

4. Dimensions and installation sizes

Figure 2

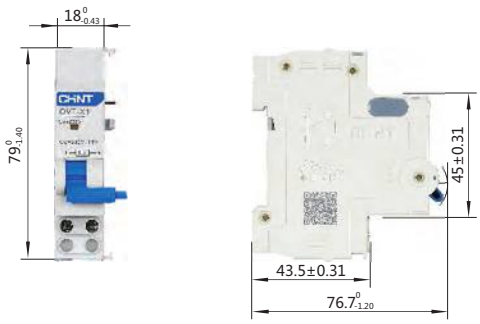

«Электро-Профи» - www.ep.ru

L



UVT-X1 Under-voltage release

1. Major function

To be assembled with the circuit breaker to achieve overvoltage protection.

2. Parameters and performance

Rated operation voltage Ue: AC 240V
Rated insulation voltage Ui 500V
Action characteristics: when the applied voltage ≤35% Ue, the product should prevent circuit breaker from closing; when 35% Ue≤ applied voltage ≤70% Ue, the product should operate and drive the circuit breaker open; when the applied voltage ≥85% Ue, the product should be able to close. The applied voltage should not exceed 110%Ue.
Life: the operating life of the release is ≥ 4000 cycles.

3. Assembly and installation of the product

UVT-X1 can be assembled with NXB-63 or NXB-40 series circuit breaker, with the assembly diagram shown below:

Figure 1

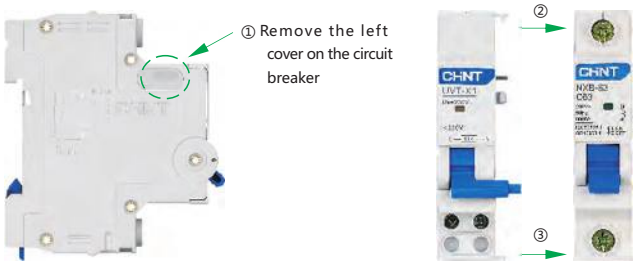

After the release is assembled with the circuit breaker, mount them on TH35-7.5 steel mounting rail.

4. Dimensions and installation sizes

Figure 2

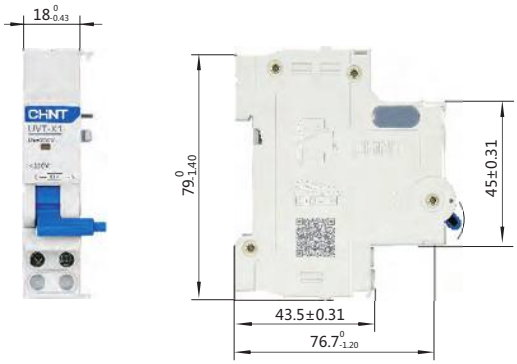

«Электро-Профи» - www.ep.ru



OUVT-X1 Over/under voltage release

1. Major function

To be assembled with circuit breaker to achieve over/under voltage protection.

2. Parameters and performance

Rated operation voltage Ue: AC 240V, 50Hz;
Overvoltage operation setting value Uvo: 280V;
Rated insulation voltage Ui: 500V;
Tripping characteristics: the release is assembled with NXB-63 series circuit breaker. When the applied voltage is reduced to 35%Ue or increased to 95% ~ 105% of the over-voltage setting value, the release should drive the circuit breaker to act. When the applied voltage is below 35%Ue or above 105% of the over-voltage setting value, the release should be able to prevent the circuit breaker from closing. When the supply voltage is above 85% Ue and below 95% of over-voltage setting value, the circuit breaker should be able to close normally. The upper limit of the applied voltage should be less than 110% over-voltage operation setting value.
Mechanical and electrical life: the mechanical and electrical life after the release is assembled with the circuit breaker should be ≥ 4000 cycles, of which, 500 cycles for over-voltage trip and under-voltage trip each, and 3000 cycles for the open/close of the circuit breaker.

3. Assembly and installation of the product

OUVT-X1 can be assembled with NXB-63 or NXB-40 series circuit breaker, with the assembly diagram shown below:

Figure 1



After AL-X1 is assembled with the circuit breaker, mount them on the TH3.5-7.5 steel mounting rail.

«Электро-Профи» - www.ep.ru

L

4. Dimensions and installation sizes

Figure 2

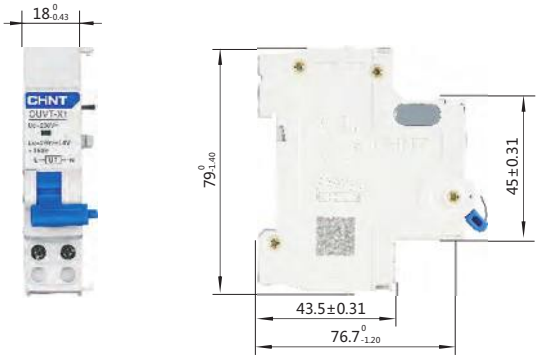

«Электро-Профи» - www.ep.ru



AX-X3 Auxiliary contact

1. Compliant standards

IEC60947-5

2. Compliant certification

CE

3. Major function

To be assembled with the circuit breaker to achieve long-distance signal indication for the open/close status of the circuit breaker

4. Parameters and performance

Rated operating currents under different working voltages:

Table 1

Utilization category	Rated operating voltage V	Rated operating current A
AC-12	AC 415	3
	AC 240	6
DC-12	DC 130	1
	DC 48	2
	DC 24	6

Action characteristics: Figure 1 shows the wiring diagram for auxiliary contacts.When the auxiliary contacts is open, terminals 11 and 12 is connected; When the auxiliary contacts is closed, terminals 11 and 14 is connected.

Life: Operating life of auxiliary contacts is ≥ 10000 cycles.

Figure 1

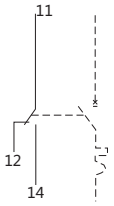

5. Assembly and installation of the product

AX-X3 can be assembled with NXB-125, NXB-125G series circuit breaker, with the assembly diagram shown below:

Figure 2

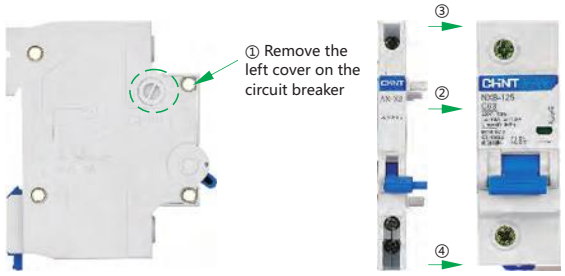

After AX-X3 is assembled with the circuit breaker, mount them on the TH3.5-7.5 steel mounting rail.

«Электро-Профи» - www.ep.ru

L

6. Dimensions and installation sizes

Figure 3

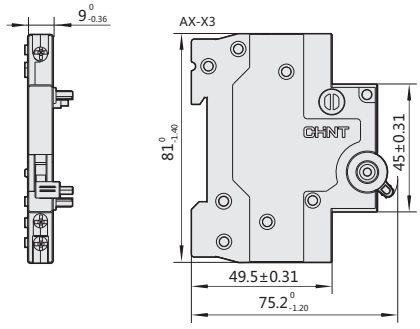

«Электро-Профи» - www.ep.ru



AL-X3 Alarm auxiliary contact

1. Compliant standards

IEC60947-5

2. Compliant certification

CE

3. Major function

To be assembled with the circuit breaker to achieve signal indication over long distance for open/close status of the circuit breaker and alarm.

4. Parameters and performance

Rated operation currents under different working voltages:

Table 1

Utilization category	Rated operating voltage V	Rated operating current A
AC-12	AC 415	3
	AC 240	6
DC-12	DC 130	1
	DC 48	2
	DC 24	6

Action characteristics: Figure 1 shows the wiring diagram for auxiliary contact.

When the auxiliary contact is open, terminals 91 and 94 is connected; When the auxiliary contact is closed, terminals 91 and 92 is connected. When the alarm auxiliary contact is closed, and manually open with the handle, terminals 91 and 92 shall still be connected; when the alarm auxiliary contact is closed, and the assembled circuit trip open due to error, terminals 91 and 92 shall be open, and terminals 91 and 94 shall be connected;

Life: Operating life of alarm auxiliary contact is ≥ 10000 cycles.

Figure 1

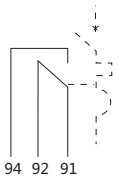

«Электро-Профи» - www.ep.ru

L

5. Assembly and installation of the product

AL-X3 can be assembled with NXB-125 series circuit breaker, with the assembly diagram shown below:

Figure 2

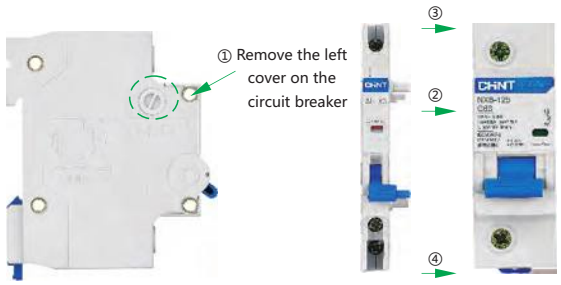

After AL-X3 is assembled with the circuit breaker, mount them on the TH3.5-7.5 steel mounting rail.

6. Dimensions and installation sizes

Figure 3

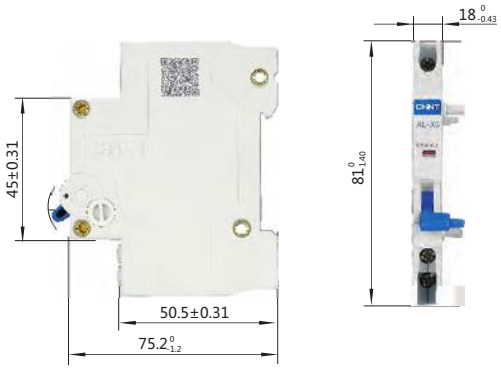

«Электро-Профи» - www.ep.ru



SHT-X3 Shunt release

1. Major function

To be assembled with the circuit breaker to achieve remote shunt trip.

2. Parameters and performance

Rated insulation voltage (Ui): 500V;
Rated operation current under different rated operation voltage (see Table 1):
Utilization category: AC-12, DC-12.

Table 1

Rated operating voltage (V)	Rated operating current (A)
AC 415	3
AC 240	6
AC/DC 48	3
AC/DC 24	6

Action characteristics: within the range of 70% ~ 110% of the rated control supply voltage, the release should operate reliably to open the circuit breaker. Figure 1 shows the wiring diagram for the release. When the release is open, terminal C2 and 12 shall be connected, and the external security indicator shall light up; when the release is closed, terminal C2 and 14 shall be connected, and the external warning indicator shall light up; when the release is closed, and the external button is connected, the release shall trip and drive the circuit breaker to trip and be opened. Meanwhile, the release indicator shall display trip mark.Mechanical life: operating life of the release is ≥ 4000 cycles.

Figure 1

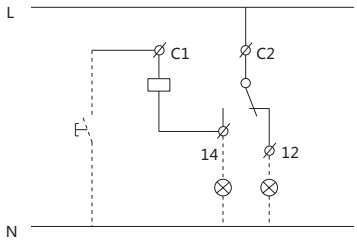

«Электро-Профи» - www.ep.ru

L

3. Assembly and installation of the product

SHT-X3 can be assembled with NXB-125 circuit breaker, with the assembly diagram shown below:

Figure 2

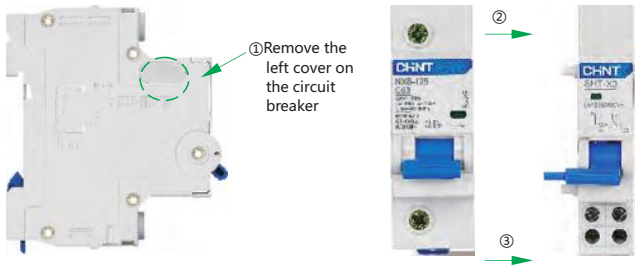

After the release is assembled with the circuit breaker, mount them on TH35-7.5 steel mounting rail.

4. Dimensions and installation sizes

Figure 3

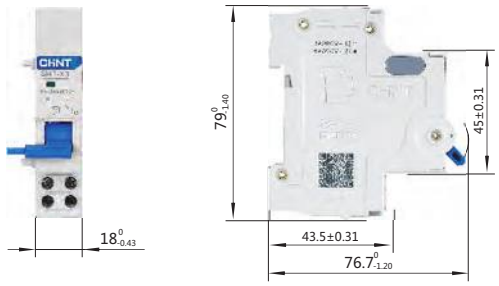

«Электро-Профи» - www.ep.ru



OVT-X3 Overvoltage release

1. Major function

To be assembled with the circuit breaker to achieve overvoltage protection.

2. Parameters and performance

Rated operation voltage Ue: AC 240V 50Hz (or 60Hz).
Rated insulation voltage Ui: 500V.
Overvoltage setting value Uvo: 280V.
Release action characteristics: when the main circuit voltage is in the range of (85% ~ 110%) Ue, the release shall be able to keep the circuit breaker to work reliably for long term. When the main circuit voltage is increased to 280 (1 ± 5%) V, the release assembled with NXB-125series circuit breaker should act and trip open NXB-125 circuit breaker.
Mechanical and electrical life: the mechanical and electrical life of release is ≥ 4000 operation cycles.

3. Assembly and installation of the product

OVT-X3 can be assembled with NXB-125 series circuit breaker, with the assembly diagram shown below:

Figure 2



After the release is assembled with the circuit breaker, mount them on TH35-7.5 steel mounting rail.

4. Dimensions and installation sizes

Figure 3

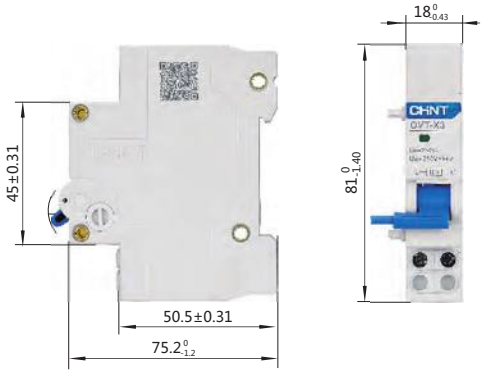

«Электро-Профи» - www.ep.ru

L



UVT-X3 Under-voltage release

1. Major function

To be assembled with the circuit breaker to achieve under-voltage protection

2. Parameters and performance

Rated operation voltage Ue: AC240V
Rated insulation voltage Ui: 500V
Life: the operating life of the release is ≥ 4000 cycles.
Action characteristics: when the applied voltage ≤35% Ue, the product should prevent circuit breaker from closing; when 35% Ue≤applied voltage ≤70% Ue, the product should operate and drive the circuit breaker open; when the applied voltage ≤85% Ue, the product should be able to close. The applied voltage should not exceed 110%Ue.

3. Assembly and installation of the product

UVT-X3 can be assembled with NXB-125 series circuit breaker, with the assembly diagram shown below:

Figure 2



After the release is assembled with the circuit breaker, mount them on TH35-7.5 steel mounting rail.

4. Dimensions and installation sizes

Figure 3

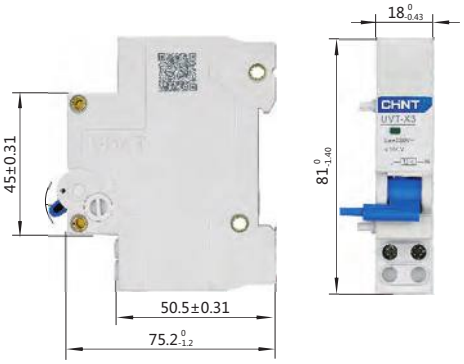

«Электро-Профи» - www.ep.ru



OUVT-X3 Over/under voltage release

1. Major function

To be assembled with circuit breaker to achieve over/under voltage protection

2. Parameters and performance

Rated operation voltage Ue: AC240V, 50Hz;
Overvoltage operation setting value Uvo: 280V;
Rated insulation voltage Ui: 500V;
Tripping characteristics: the release is assembled with NXB-125 series circuit breaker. When the applied voltage is reduced to 35%Ue or increased to 95% ~ 105% of the over-voltage setting value, the release should drive the circuit breaker to act. When the applied voltage is below 35%Ue or above 105% of the over-voltage setting value, the release should be able to prevent the circuit breaker from closing. When the supply voltage is above 85% Ue and below 95% of over-voltage setting value, the circuit breaker should be able to close normally. The upper limit of the applied voltage should be less than 110% over-voltage operation setting value.
Mechanical and electrical life: the mechanical and electrical life after the release is assembled with the circuit breaker should be ≥ 4000 cycles, of which, 500 cycles for over-voltage trip and under-voltage trip each, and 3000 cycles for the open/close of the circuit breaker.

3. Assembly and installation of the product

OUVT-X3 can be assembled with NXB-125 series circuit breaker, with the assembly diagram shown below:

Figure 2



After OUVT-X3 is assembled with the circuit breaker, mount them to TH35-7.5 steel mounting rail.

4. Dimensions and installation sizes

Figure 3

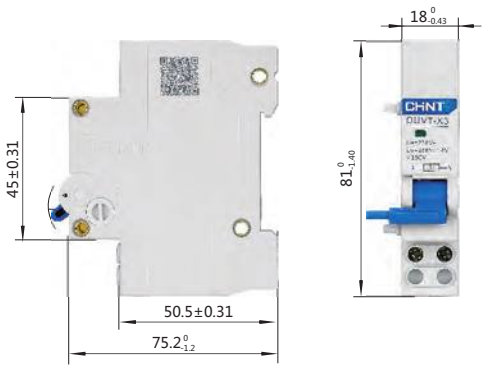

«Электро-Профи» - www.ep.ru

L



NXHB-125 Isolation switch

1. Compliant standards

IEC60947-3

2. Compliant certification

CE

3. Major function

Isolation function

4. Parameters and performance

Rated current Ie: 20A, 32A, 40A, 63A, 80A, 100A, 125A;
Number of poles: 1P, 2P, 3P, 4P;
Rated insulation voltage Ui: 500V;
Rated operation voltage Ue: 240V~(1P), 415V~(2P, 3P, 4P);
Rated impulse withstand voltage Uimp: 6kV;
Rated short time withstand current Icw: 12 Ie, power-on time of 1s;
Rated short-circuit making capacity Icm: 20Ie, power-on time of 0.1s;
Rated making and breaking capacity: 3Ie, 1.05Ue, COSΦ=0.65;
Operation performance: mechanical life of 10,000 cycles, electrical life of 3000 cycles;
Pollution degree: Ⅱ;
Utilization category: AC-22A, AC-21B;
Installation category: Ⅱ, Ⅲ;
Installation: TH35-7.5 steel rail mounting, the gradient of the mounting surface from the vertical plane should be ≤5°;
Wiring: screw clamp wiring, tightening torque 3.5N·m (80A ~ 125A);
tightening torque 2.0N·m(20A ~ 63A).

5. Dimensions and installation sizes

Fig 1 Dimensions and installation sizes

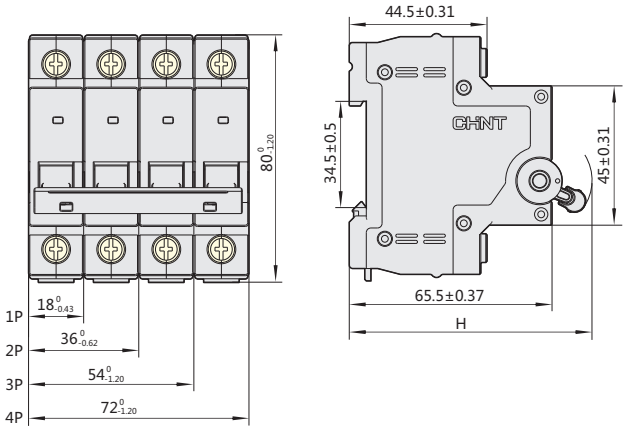

	1P	2P~4P
H(mm)	$76.3^{0}_{-1.2}$	$78^{0}_{-1.2}$

«Электро-Профи» - www.ep.ru

The brand-new electronic release

Manage fault accurately
Operate more efficiently and reliably

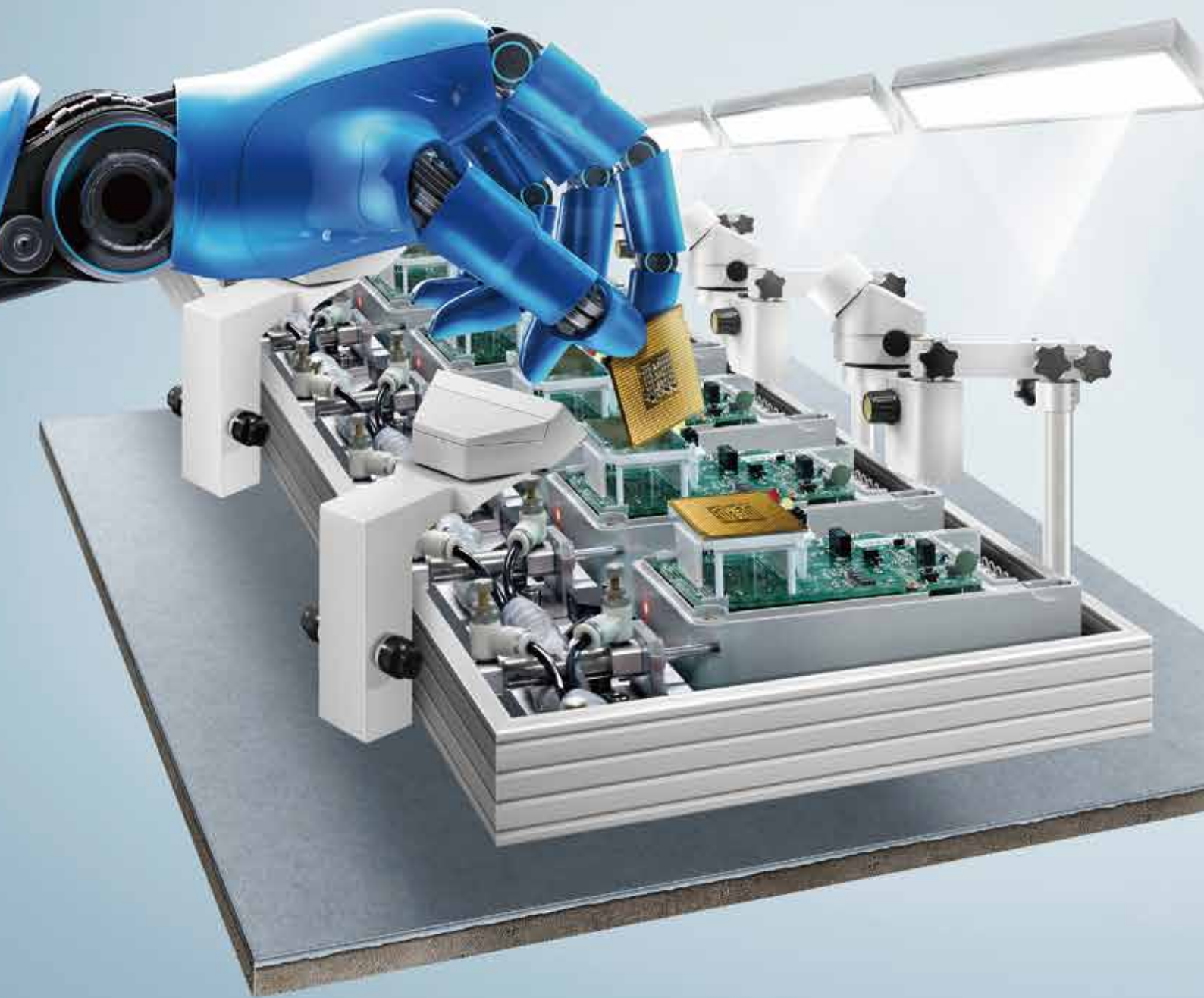

«Электро-Профи» - www.ep.ru

CHINT ELECTRIC | Next series

The Next Reliable Choice

Moulded Case Circuit Breaker



Detailed division of frame size, with more options

Select the most suitable frame size, increase the product cost performance and reduce costs of using.

The brand-new electronic release, provide more accurate circuit protection

The all-new electronic release can deal with the hidden fault more accurately, with a more convenient parameters setting.

Dual insulation design, for a more convenient maintenance

Enhance the insulating capacity of the product, allowing the accessories installation, which make the maintenance more safe and efficient.

With a USB port for better human-machine interaction

Connected with PC devices through the USB port, lets you manage functions such as data reading, parameter setting, on-line detection and failure recording.

Absolute adaptability, with steady and reliable operation in extreme conditions

-35°C/+70°C operating temperature range. Meets several applications requirements.

«Электро-Профи» - www.ep.ru

CHINT ELECTRIC | Next series

Moulded Case Circuit Breaker

NXM series moulded case circuit breaker P-001

Overview P-003

Product selection P-009

Code of inner accessories P-017

Functions and features

Technical parameters P-027
Protection feature P-035
Accessories P-045
Complementary technical data P-058

Dimensions and installation P-062

Tripping curves P-081

«Электро-Профи» - www.ep.ru

Accessories

1. Body
2. Alarm contact (optional)
3. Motor-driven mechanism (optional)
4. Auxiliary contact (optional)
5. Connection plate (optional)
6. Shunt release (optional)
7. Communication module(optional)
8. Rear connection plate (optional)
9. Under voltage release (optional)
10. Interphase barrier (standard)
11. Plug-in basement(optional)
12. Handheld test module(optional)
13. Manual operation mechanism (optional)



«Электро-Профи» - www.ep.ru

M

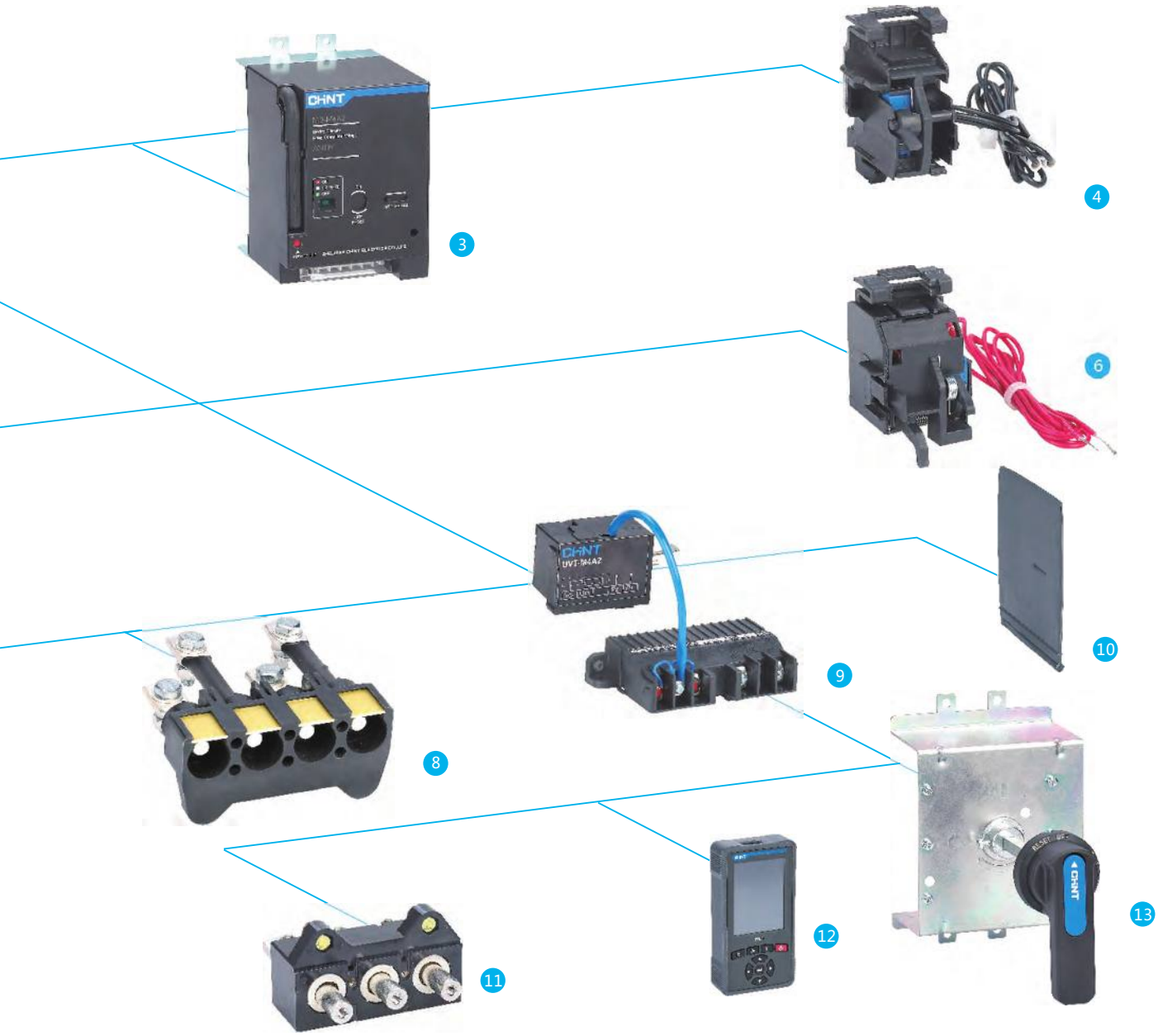

«Электро-Профи» - www.ep.ru

NXM series moulded case circuit breaker



NXM-250S/4300A



NXMS-250H/3300

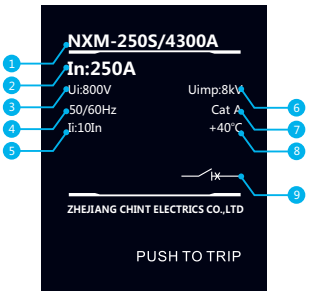

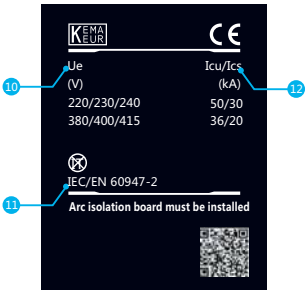

NXM Nameplate of thermomagnetic stationary molded case circuit breaker

Breaker

The moulded case circuit breaker will provide protection for the circuit and equipment in case of overload, short circuit and under voltage condition occurred in the power distribution circuit. Besides, it can also provide protection of overload, short circuit and under voltage for the non-frequent start of motor

- Frame size:
  NXM series moulded case circuit breaker: 63A, 125A, 160A, 250A, 400A, 630A, 800A, 1000A, 1250A, 1600A
  NXMS series electronic breaker: 160A, 250A, 400A, 630A, 1000A, 1250A, 1600A
- Rated operational voltage: Ue : 220V/230V/240V, 380V/400V/415V, 500V , 690V
- Breaking capacity code: E, S, F, H
- Number of poles: 2P, 3P, 4P
- Release type:thermal magnetic fixed type; magnetic fixed type; electronic type.
- Installation method: Fixed type; plug-in type

Nameplate interpretation

1. Product type: Frame size; breaking capacity; poles number
2. In: Rated operational current
3. Ui: Rated insulation voltage
4. Frequency of A.C.
5. Ii: 10In Multiple of current of transient behavior
6. Uimp: Rated impulsive withstand voltage
7. Cat A: Utilization category of breaker
8. +40°C: Ambient temperature
9. Electrical symbol for circuit breaker with isolating function
10. Ue: Rated operational voltage
11. The product is in conformity with standard IEC/EN 60947.2
12. Icu/Ics: Ultimate short circuit breaking capacity/Service short circuit breaking capacity

«Электро-Профи» - www.ep.ru

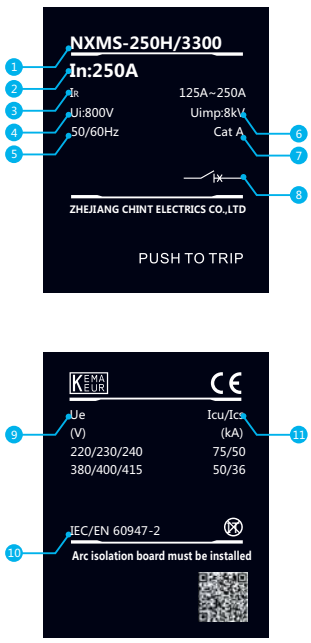

Nameplate of NXM electronic molded case circuit breaker

1. Product type: Frame size; breaking capacity; poles number
2. In: Rated operational current
3. I_R: Long-time-delay setting current range
4. Ui: Rated insulation voltage
5. Frequency of A.C.
6. Uimp: Rated impulsive withstand voltage
7. Cat A: Utilization category of breaker
8. Electrical symbol for circuit breaker with isolating function
9. Ue: Rated operational voltage
10. The product is in conformity with standard IEC/EN 60947.2
11. Icu/Ics: Ultimate short circuit breaking capacity/Service short circuit breaking capacity

Electronic release

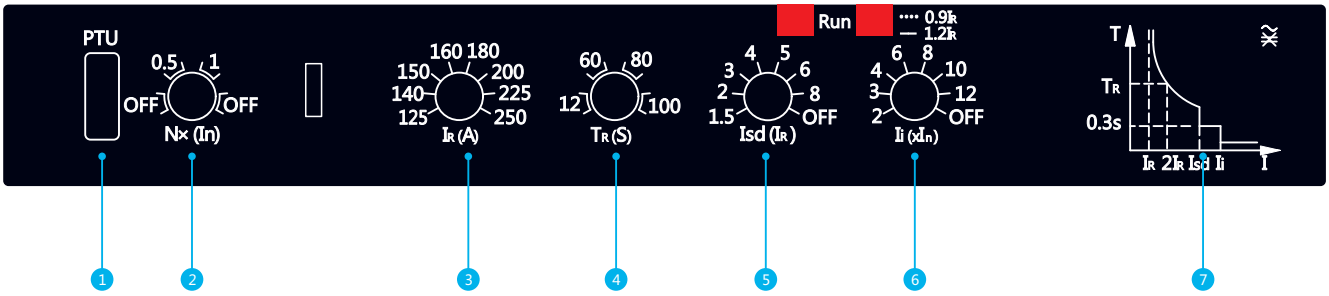

1. PTU interface
2. Neutral pole protection current setting, with 2 steps of current that is adjustable and can be turned off (OFF)
3. Rated current setting with 8 steps
4. Long-time-delay (S) setting with 4 steps
5. Short-time-delay current Isd setting with 7 steps that is adjustable and can be turned off (OFF)
6. Instantaneous action current Ii setting with 7 steps and that can be turned off (OFF)
7. Current-time protection curve

«Электро-Профи» - www.ep.ru

NXMLE series residual current circuit breaker



NXMLE-250S/4300A

Residual current operated protection breaker (Coming soon)

Residual current circuit breakers are used mainly to provide protection against leakage current which may cause insulation failure , electric shock to equipment and human body irrespectively along with the standard protection against over load & short circuit condition.

- Frame size: 125A, 160A, 250A, 400A, 630A
- Rated operational voltage: Ue(V AC): 220/230/240, 380/400/415
- Breaking capacity code: S, F, H
- Number of poles: 1PN, 2P, 3P, 3PN, 4P
- Installation method: fixed type; plug-in type

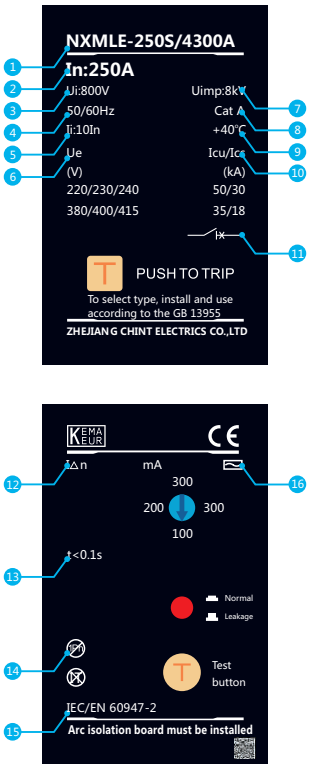

Nameplate of NXMLE residual current circuit breaker

Nameplate interpretation

1. Product type: Frame size, breaking capacity, poles number
2. In: Rated operational current
3. Ui: Rated insulation voltage
4. Frequency of A.C.
5. Ii: 10In: Multiple of current of transient behavior
6. Ue: Rated operational voltage
7. Uimp: Rated impulsive withstand voltage
8. Cat A: Utilization category of breaker
9. +40℃: Ambient temperature
10. Icu/Ics: Rated ultimate breaking capacity / Rated service breaking capacity
11. Electrical symbol for circuit breaker with isolating function
12. Rated residual operating current value
13. t: Maximum breaking time
14. Only applicable for three-phase power
15. The product is in conformity with standard IEC/EN 60947.2
16. Leakage current selection (mA)

«Электро-Профи» - www.ep.ru

M

NXHM series disconnector switch

Disconnector switch (Coming soon)

The disconnector switch series are mainly used for non-frequent circuit making or breaking circuit in the distribution network.

- Frame size: 63A, 125A, 160A, 250A, 320A, 400A, 630A, 800A, 1000A
- Rated operational voltage: Ue(VAC): 380/400/415/690
- Number of poles: 3P, 4P
- Installation method: fixed type; plug-in type



NXHM-250

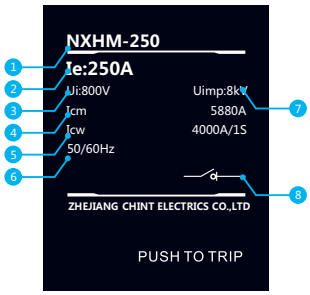

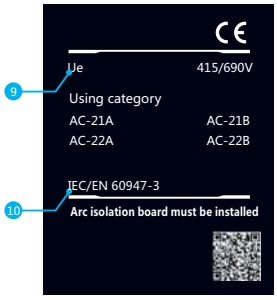

Nameplate of NXHM disconnector switch

Installation method: stationary type and plug-in type

1. Product type: Frame size; poles number
2. Ie: Rated operational current
3. Ui: Rated insulation voltage
4. Icm: Rated short-time making capacity
5. Icw: Rated short-time withstand current
6. Frequency of A.C.
7. Uimp: Rated impulsive withstand voltage
8. Disconnector Function as per IEC/EN
9. Ue: Rated operational voltage
10. The product is in conformity with standard IEC/EN 60947.3

«Электро-Профи» - www.ep.ru

Compliant with standard



- Product standard
  IEC 60947-1(General rules)
  IEC 60947-2(Breaker)
  IEC 60947-3(switch, disconnector)
  IEC 60947-4(motor, drive)

- Use standard in extreme environment
  IEC 60068-2-1(low temperature)
  IEC 60068-2-2(dry heat)
  IEC 60068-2-11(salt mist)
  IEC 60068-2-30(damp and hot)

Anti-humid heat capacity



The product has passed the environmental test of dry cold, dry heat, and wet heat and the like. It can operate reliably under extreme environmental conditions.

«Электро-Профи» - www.ep.ru

M

Environment temperature





It must calculate according to the temperature compensation coefficient table provided in the sample in the event the temperature is lower than -5℃ or higher than 40℃.

Altitude and pollution degree



The installation altitude of normal operation is 2000 m and below. In case of higher than 2000m, it must consider the decrease of dielectric strength and colder air. The amendment action shall be implemented according to the altitude derating factor table provided in the sample.



The product can operate reliably in pollution degree III environment defined in IEC 60947-1and 60664-1(industrial environment).

Protection grade



The product is in conformity with the standard requirements of IEC 60529 (enclosure protection grade).
Product body: protection grade is IP30 (except the wiring terminal position)

- Installation of cabinet door
  Equipped with toggle handle: the protection grade is IP40
  Equipped with rotation handle: the protection grade is IP50
  Equipped with motor-driven mechanism: the protection grade is IP40

«Электро-Профи» - www.ep.ru

NXM series moulded case circuit breaker

Model definition and description

NXM	-	160	S	P	/	4	300	
Product code		Frame size code	Breaking capacity code[2]	Operation way code		Number of poles code	Code of release type and inner accessories[3]	
NXM: moulded case circuit breaker		63A 125A 160A 250A 400A 630A 800A 1000A 1250A 1600A	E: 15kA S: 25kA F: 36kA H: 50kA E: 20kA S: 36kA F: 36kA H: 50kA E: 36kA S: 50kA F: 50kA H: 70kA S: 50kA F: 50kA H: 70kA S: 50kA H: 70kA	No code: direct handle operation P: motor operation Z: rotary handle operation		2: 2 poles 3: 3 poles 4: 4 poles	First number represents the release type 2: only magnetic type 3: thermal magnetic type The second number and the third number are codes of inner accessories	

Model selection examples:

NXM-160S P/4300 2 A G 100 R: To order one moulded case circuit breaker with 160A frame size, 35kA breaking capacity, thermal adjustable and magnetic fixed release, with motor-driven mechanism, 4 poles, with no inner accessories, motor protection, the category of four poles is A, with overload alarm non-tripping function. The rated current is 100A and rear connection.

Note: [1] The rated current of each frame can be seen in table 1.

[2] The corresponding poles number and breaking capacity related to frame size can be seen in table 2.

[3] For tripping method and inner accessories, see page 17-20.

Comparison table of frame sizes and rated current

Rated current (A)		10	15	16	20	25	30	32	40	50	60	63	65	70	75	80	90	100	110	125	140	150	160
Frame size (A)	63	■	■	■	■	■	■	■	■	■	■	■											
	125	■	■	■	■	■	■	■	■	■	■	■	■	■	■	■	■	■	■	■			
	160					■	■	■	■	■	■	■		■	■	■		■		■	■	■	■
	250																						■
	400																						
	630																						
	800																						
	1000																						
	1250																						
	1600																						

Comparison table of frame sizes, number of poles and breaking capacity

Frame size (A)		63			125			160			250		
Number of poles		2P	3P	4P	2P	3P	4P	2P	3P	4P	2P	3P	4P
Code of breaking capacity	E	■	■	■	■	■	■	■	■	■	■	■	■
	S	■	■	■	■	■	■	■	■	■	■	■	■
	F	-	■	■	-	■	■	-	■	■	-	■	■
	H	-	■	■	-	■	■	-	■	■	-	■	■

«Электро-Профи» - www.ep.ru

M

	2	A	100	R
	Usage code	Product with N pole the code is selectable	Rated current[1)]	Code of installation
	No code: distribution protection 2: motor protection	A: there is no over current release installed at pole N and the N pole will always connect, which will not operate with the other three poles. B: there is no over current release installed at pole N and the N pole will operate with the other three poles; C: there is over current release installed at N pole, and the N pole will operate with the other three poles; D: there is over current release installed at N pole, and the N pole will always connects, which will operate with the other three poles	10A~1600A	No code: front connection R: rear connection DR: plug-in type rear connection

Table 1

	170	180	200	225	250	280	315	320	400	500	600	630	700	800	900	1000	1250	1600
	■	■	■	■	■													
					■	■	■	■	■									
									■	■	■	■						
												■	■	■				
														■	■	■		
																■	■	
																■	■	■

Table 2

	400			630			800			1000			1250			1600		
	2P	3P	4P	2P	3P	4P	2P	3P	4P	2P	3P	4P	2P	3P	4P	2P	3P	4P
	-	■	■	-	■	■	-	-	-	-	-	-	-	-	-	-	-	-
	-	■	■	-	■	■	-	■	■	-	■	■	-	■	■	-	■	■
	-	■	■	-	■	■	-	■	■	-	-	-	-	-	-	-	-	-
	-	■	■	-	■	■	-	■	■	-	■	■	-	■	■	-	■	■

«Электро-Профи» - www.ep.ru

NXMS series electronic moulded case circuit breaker

Description

NXMS	-	160	H	P	/	3	
Product code		Frame size code	Breaking capacity code[2]	Operation code		Number of poles code[2]	
NXMS series electronic moulded case circuit breaker		160A 250A 400A 630A 1000A 1250A 1600A	F: 36kA H: 50kA S: 50kA F: 50kA H: 70kA S: 50kA H: 70kA S: 50kA H: 70kA	No code: direct handle operation P: motor operation Z: rotary handle operation		3: 3 poles 4: 4 poles[4]	

Model selection examples:

NXMS-160H P/3300 2 T 125R: To order one electronic moulded case circuit breaker with frame size 160 , 50kA breaking capacity, with motor-driven mechanism, 3 poles, with no inner accessories, electronic release type, motor protection, with communication module.

The rated current is 125A and the installation method is rear connection.

Note: [1] The rated current of each frame can be seen in table 3.

[2] The corresponding poles number and breaking capacity related to each frame size can be seen in table 4.

[3] For tripping method and inner accessories, see page 21-22.

[4] The type of neutral pole (N pole) is: there is over current release installed at N pole and N pole will operate with the other three poles together (N pole will connect at first and then disconnect).

Comparison table frame size and rated current

Table 3

Rated current(A)		32	63	125	160	250	400	630	800	1000	1250	1600
Frame size(A)	160	■	■	■	■							
	250					■						
	400						■					
	630							■				
	1000								■	■		
	1250										■	
	1600											■

Comparison table of frame size, number of poles and breaking capacity

Table 4

Frame size(A)		160		250		400		630		1000		1250		1600	
Number of poles		3P	4P	3P	4P	3P	4P	3P	4P	3P	4P	3P	4P	3P	4P
Code of breaking capacity	S	-	-	-	-	■	■	■	■	■	■	■	■	■	■
	F	■	■	■	■	■	■	■	■	-	-	-	-	-	-
	H	■	■	■	■	■	■	■	■	■	■	■	■	■	■

«Электро-Профи» - www.ep.ru

M

	300	2	T	125	R
	Releasing method and code of inner accessories	Usage code	Communication module code	Rated current[1)]	Code of installation
	First number represents the release type. 3: The second number and the third number are code of inner accessories	No code: distribution protection 2: motor protection	No code: no communication module T: with communication module	32A~1600A	No code: front connection R: rear connection DR: plug-in type of rear connection

«Электро-Профи» - www.ep.ru

NXMLE series residual current circuit breaker (Coming soon)

Description

NXMLE	-	125	H	P	/	3	300	2	
Product code		Frame size code	Breaking capacity code[2]	Code of operation mode		Code of poles number	Releasing method and code of inner accessories[3]	Usage code	
NXMLE: residual current circuit breaker		125A 160A 250A 400A 630A	S: 25kA F: 18kA H: 36kA S: 35kA H: 50kA S: 50kA H: 75kA	No code: direct handle operation P: motor operation Z: rotary handle operation		1PN 2P 3P 3PN 4P	First number represents the release type. only magnetic type 2: type6) 3: thermal magnetic type The second number and the third number are codes of accessories	No code distribution protection 2:motor protection	

Model selection examples:
NXMLE-125H P/4300 2 A 100 J A Y R: To order one residual current circuit breaker with 125A frame size, 35kA breaking capacity, with motor-driven mechanism, 3 poles , thermal magnetic fixed type release, with no inner accessories, motor protection, the code of N pole is A.
The rated current is 100A with electric leakage alarm non-trip function, and the residual current value is A (30/50/100). It is delay type and rear connection.

Comparison table of frame size and rated current

Rated current (A)		10	16	20	25	32	40	50	63	80	100	125	160	180
Frame size (A)	125	■	■	■	■	■	■	■	■	■	■	■		
	160											■	■	
	250												■	■
	400													
	630													

Comparison table of frame size, poles number and breaking capacity

Frame size (A)		125			160			250		
Number of poles		1PN/2P	3P	3PN/4P	1PN/2P	3P	3PN/4P	1PN/2P	3P	3PN/4P
Code of breaking capacity	S	■	■	■	■	■	■	■	■	■
	F	-	■	■	-	■	■	-	■	■
	H	-	■	■	-	■	■	-	■	■

Comparison table of frame size and residual current value and code

Frame size (A)		125	160	250
Fixed single grade, non-delay type	Residual current value and code (mA)	30/50/100/200/300/500	30/50/100/200/300/500	30/50/100/200/300/500
Adjustable 3 grades, non-delay type		A: 30/50/100	A: 30/50/100	A: 30/50/100
		B: 50/100/200	B: 50/100/200	B: 50/100/200
		C: 100/200/300	C: 100/200/300	C: 100/200/300
		D: 200/300/500	D: 200/300/500	D: 200/300/500
Fixed single grade, delay type		50/100/200/300/500	50/100/200/300/500	50/100/200/300/500
Adjustable 3 grades, delay type		B: 50/100/200	B: 50/100/200	B: 50/100/200
		C: 100/200/300	C: 100/200/300	C: 100/200/300
		D: 200/300/500	D: 200/300/500	D: 200/300/500
		-	-	-

«Электро-Профи» - www.ep.ru

M

	A	Y	J	A	100	R
	Product with N pole, selectable code	Openning time[5]	Code of residual current alarm function	Code of residual current value[4]	Rated current[1]	Code of installation
	A: there is no over current release installed at N pole and the N pole will always connect, which will not operate with the other three poles. B: there is no over current release installed at N pole and the N pole will operate with the other three poles;	No code: no time delay type Y: time delay type	No code Without residual current alarm with non-trip function J: Residual current alarm with non-trip function Q: Residual current start and stop function	A B C D E	10A~800A	No code: front connection R: rear connection DR: plug-in type with rear connection

Note : [1] See table 5 for rated current included in each frame size
[2] See table 6 for corresponding poles, breaking capacity.
[3] See page 23-24 for release type and inner accessories.
[4] As for the un-adjustable type, mark the residual current value directly; for the adjustable type, mark the code.
[5] See table 8 for opening time.

Table 5

	200	225	250	315	350	400	500	630
	■	■	■					
			■	■	■	■		
						■	■	■

Table 6

	400			630	
	3P	3PN/4P	3PN/4P	3P	3PN/4P
	■	■	■	■	■
	■	■	■	■	■
	■	■	■	■	■

Table 7

	400	630
	50/100/200/300/500/1000	50/100/200/300/500/1000
	B: 50/100/200	B: 50/100/200
	C: 100/200/300	C: 100/200/300
	D: 200/300/500	D: 200/300/500
	E: 300/500/1000	E: 300/500/1000
	50/100/200/300/500/1000	50/100/200/300/500/1000
	B: 50/100/200	B: 50/100/200
	C: 100/200/300	C: 100/200/300
	D: 200/300/500	D: 200/300/500
	E: 300/500/1000	E: 300/500/1000

«Электро-Профи» - www.ep.ru

Comparison table of frame size and maximum opening time

Frame size (A)	125	160	250
Non-delay type (s)	≤0.1	≤0.1	≤0.1
Delay type Y (s)	0.3/0.4/0.5	0.3/0.4/0.5	0.3/0.4/0.5

NXHM series switch disconnector (Coming soon)

Description

NXHM	-	63	P	/	3	00
Product code		Frame size code	Code of operation way		Number of poles code	Code of inner accessories[1)]
NXHM: switch disconnector		63A 125A 160A 250A 400A 630A 800A 1000A	No code: direct handle operation P: motor operation Z: rotary handle operation		3: 3 poles 4: 4 poles	Code of inner accessories

Model selection examples:

NXHM-63 P/300 : To order one disconnector switch with 63A frame size, with motor-driven mechanism, 3 poles, with no inner accessories rear connection.

Note: [1)] See page 25-26 of product sample for inner accessories code. The number code "00" can be omitted in case of no inner accessories.

«Электро-Профи» - www.ep.ru

Table 8

	400	630
	≤0.1	≤0.1
	0.3/0.4/0.5	0.3/0.4/0.5

«Электро-Профи» - www.ep.ru

NXM series moulded case circuit breaker,code of inner accessories

☐ Alarm contact, ■ Auxiliary contact, ● Shunt release, ○ Under voltage release.

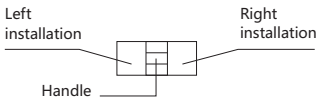

Accessories name	Accessories code		NXM-63E/S NXM-125E/S		NXM-63F/H NXM-125F/H	
	Only magnetic	Thermal magnetic release	3P	4P	3P	4P
No inner accessories	200	300				
Alarm contact	208	308	□	□	□	□
Shunt release	210	310	●	●	●	●
Auxiliary contact (1NO1NC)	220	320	■	■	■	■
Auxiliary contact (2NO2NC)						
Under voltage release	230	330	○	○	○	○
Shunt release, auxiliary contact (1NO1NC)	240	340	● ■	● ■	● ■	● ■
Shunt release, auxiliary contact (2NO2NC)						
Under voltage release, shunt release	250	350	○ ●	○ ●	○ ●	○ ●
Two groups of auxiliary contact (2NO2NC)	260	360				
Under voltage release, auxiliary contact (1NO1NC)	270	370	○ ■	○ ■	○ ■	○ ■
Under voltage release, auxiliary contact (2NO2NC)						
Shunt release, alarm contact	218	318	● □	● □	● □	● □
Auxiliary contact (1NO1NC),alarm contact	228	328	■ □	■ □	■ □	■ □
Auxiliary contact (2NO2NC), alarm contact						
Under voltage release, alarm contact	238	338	○ ○	○ ○	○ ○	○ ○
Shunt release, auxiliary contact (1NO1NC), alarm contact	248	348	● ■ □	● ■ □	● ■ □	● ■ □
Two groups of auxiliary contact (2NO2NC), alarm contact	268	368				
Under voltage release, auxiliary contact (1NO1NC), alarm contact	278	378	○ ■ □	○ ■ □	○ ■ □	○ ■ □

«Электро-Профи» - www.ep.ru

M

	NXM-160E/S		NXM-160F/H	
	3P	4P	3P	4P
				
				
				
				
				
				
				
				
				
				

«Электро-Профи» - www.ep.ru

(Continued from the table above)

Accessories name	Accessories code		NXM-250E/S		NXM-250F/H	
	Only magnetic	Thermal magnetic release	3P	4P	3P	4P
No inner accessories	200	300				
Alarm contact	208	308				
Shunt release	210	310				
Auxiliary contact (1NO1NC)	220	320				
Auxiliary contact (2NO2NC)						
Under voltage release	230	330				
Shunt release, auxiliary contact (1NO1NC)	240	340				
Shunt release, auxiliary contact (2NO2NC)						
Under voltage release, shunt release	250	350				
Two groups of auxiliary contact (2NO2NC)	260	360				
Under voltage release, auxiliary contact (1NO1NC)	270	370				
Under voltage release, auxiliary contact (2NO2NC)						
Shunt release, alarm contact	218	318				
Auxiliary contact (1NO1NC), alarm contact	228	328				
Auxiliary contact (2NO2NC), alarm contact						
Under voltage release, alarm contact	238	338				
Shunt release, auxiliary contact (1NO1NC), alarm contact	248	348				
Two groups of auxiliary contact (2NO2NC), alarm contact	268	368				
Under voltage release, auxiliary contact (1NO1NC), alarm contact	278	378				

«Электро-Профи» - www.ep.ru

M

	NXM-400E/S/F/H NXM-630E/S/F/H		NXM-800S/F/H NXM-1000S/H		NXM-1250S/H		NXM-1600S/H	
	3P	4P	3P	4P	3P	4P	3P	4P
								
								
								
								
								

«Электро-Профи» - www.ep.ru

NXMS series electronic moulded case circuit breaker, code of inner accessories

Accessories name	Accessories code		NXMS-160F/H		NXMS-250F/H	
	Only magnetic	Thermal magnetic release	3P	4P	3P	4P
No inner accessories	200	300				
Alarm contact	208	308				
Shunt release	210	310				
Auxiliary contact (1NO1NC)	220	320				
Auxiliary contact (2NO2NC)						
Under voltage release	230	330				
Shunt release, auxiliary contact (1NO1NC)	240	340				
Shunt release, auxiliary contact (2NO2NC)						
Under voltage release shunt release	250	350				
Two groups of auxiliary contact (2NO2NC)	260	360				
Under voltage release, auxiliary contact (1NO1NC)	270	370				
Under voltage release, auxiliary contact (2NO2NC)						
Shunt release, alarm contact	218	318				
Auxiliary contact (1 NO1NC), alarm contact	228	328				
Auxiliary contact (2 NO2NC), alarm contact						
Under voltage release, alarm contact	238	338				
Shunt release, auxiliary contact (1NO1NC), alarm contact	248	348				
Two groups of auxiliary contact (2NO2NC), alarm contact	268	368				
Under voltage release, auxiliary contact (1NO1NC), alarm contact	278	378				

«Электро-Профи» - www.ep.ru

M

	NXMS-400S/F/H NXMS-630S/F/H		NXMS-1000S/H		NXMS-1250S/H		NXMS-1600S/H	
	3P	4P	3P	4P	3P	4P	3P	4P
								
								
								
								
								

«Электро-Профи» - www.ep.ru

NXMLE series residual current circuit breaker, code of inner accessories

Accessories name	Accessories code		NXMLE-125S/H		NXMLE-160S/F/H	
	Only magnetic	Thermal magnetic release	3P	3PN/4P	3P	3PN/4P
No inner accessories	200	300				
Alarm contact	208	308				
Shunt release	210	310				
Auxiliary contact (1 NO1NC)	220	320				
Auxiliary contact (2 NO2NC)						
Under voltage release	230	330				
Shunt release, auxiliary contact (1NO1NC)	240	340				
Shunt release, auxiliary contact (2NO2NC)						
Under voltage release, shunt release	250	350				
Two groups of auxiliary contact (2NO2NC)	260	360				
Under voltage release, auxiliary contact (1NO1NC)	270	370				
Under voltage release, auxiliary contact (2NO2NC)						
Shunt release, alarm contact	218	318				
Auxiliary contact (1 NO1NC), alarm contact	228	328				
Auxiliary contact (2 NO2NC), alarm contact						
Under voltage release, alarm contact	238	338				
Shunt release, auxiliary contact (1NO1NC), alarm contact	248	348				
Two groups of auxiliary contact (2NO2NC), alarm contact	268	368				
Under voltage release, auxiliary contact (1NO1NC), alarm contact	278	378				

«Электро-Профи» - www.ep.ru

M

	NXMLE-250S/F/H		NXMLE-400S/F/H NXMLE-630S/F/H	
	3P	3PN/4P	3P	3PN/4P
				
				
				
				
				
				
				
				
				
				
				
				
				
				
				
				

«Электро-Профи» - www.ep.ru

NXHM series disconnector switch, code of inner accessories

Accessories name	Accessories code	NXHM-63 NXHM-125		NXHM-160	
		3P	4P	3P	4P
No inner accessories	00				
Alarm contact	08				
Shunt release	10				
Auxiliary contact (1NO1NC)	20				
Auxiliary contact (2NO2NC)					
Under voltage release	30				
Shunt release, auxiliary contact (1NO1NC)	40				
Shunt release, auxiliary contact (2NO2NC)					
Under voltage release, shunt release	50				
Two groups of auxiliary contact (2NO2NC)	60				
Under voltage release, auxiliary contact (1NO1NC)	70				
Under voltage release, auxiliary contact (2NO2NC)					
Shunt release, alarm contact	18				
Auxiliary contact (1NO1NC), alarm contact	28				
Auxiliary contact (2NO2NC), alarm contact					
Under voltage release, alarm contact	38				
Shunt release, auxiliary contact (1NO1NC), alarm contact	48				
Two groups of auxiliary contact (2NO2NC), alarm contact	68				
Under voltage release, auxiliary contact (1NO1NC), alarm contact	78				

«Электро-Профи» - www.ep.ru

M

	NXHM-250 NXHM-320		NXHM-400 NXHM-630		NXHM-800		NXHM-1000	
	3P	4P	3P	4P	3P	4P	3P	4P
								
								
								
								
								

«Электро-Профи» - www.ep.ru

Technical Parameters

NXM series moulded case circuit breaker

Frame Size, rated current Inm (A)			63				125				160				250			
Rated current In (A), 40℃, 55℃			10,16,20,25,30, 32,40,50,60,63				10,16,20,25,30,32, 40,50,60,63,70,75, 80,100,125				32,40,50,60,63,70,75,80, 100,125,140,150,160				160,170,180,200,225,250			
Rated insulation voltage Ui(V)			800				800				800				800			
Rated impulse withstand voltage Uimp(kV)			8				8				8				8			
Rated operational voltage Ue(V), AC50/60Hz			220/230/240, 380/400/415/500				220/230/240, 380/400/415/500				220/230/240, 380/400/415				220/230/240, 380/400/415			
Breaking capacity code			E	S	F	H	E	S	F	H	E	S	F	H	E	S	F	H
Number of poles		2P	■	■	-	-	■	■	-	-	■	■	-	-	■	■	-	-
		3P	■	■	■	■	■	■	■	■	■	■	■	■	■	■	■	■
		4P	■	■	■	■	■	■	■	■	■	■	■	■	■	■	■	■
Rated ultimate short circuit breaking capacity Icu (kA)		AC220/230/240V	18	36	50	75	18	36	50	75	40	50	50	75	40	50	50	75
		AC380/400/415V	15	25	36	50	15	25	36	50	20	36	36	50	20	36	36	50
		AC500V	-	-	15	25	-	-	-	-	-	-	-	-	-	-	-	-
Rated service short circuit breaking capacity Ics (kA)		AC220/230/240V	18	18	50	50	18	18	50	50	30	30	50	50	30	30	50	50
		AC380/400/415V	15	15	36	36	15	15	36	36	20	20	36	36	20	20	36	36
		AC500V	-	-	15	25	-	-	-	-	-	-	-	-	-	-	-	-
In conformity with standards			IEC/EN 60947-2															
Utilization category			A				A				A				A			
Isolation function			■				■				■				■			
Ambient temperature			-35℃~+70℃															
Arcing distance			≤50				≤50				≤50				≤50			
Mechanical life (times)		Without maintenance	20000				20000				20000				20000			
		With maintenance	40000				40000				40000				40000			
Electricallife (times)		AC415V, In	10000				10000				10000				10000			
Release type and protection type	Magnetic release	Distribution protection	■	■			■	■			■	■			■	■		
		Motor protection	■	■			■	■			■	■			■	■		
	Thermal magnetic release	Distribution protection	■	■			■	■			■	■			■	■		
		Motor protection	■	■			■	■			■	■			■	■		
Accessories	Auxiliary contact		■	■			■	■			■	■			■	■		
	Alarm contact		■	■			■	■			■	■			■	■		
	Auxiliary contact, alarm contact		■	■			■	■			■	■			■	■		
	Shunt release		■	■			■	■			■	■			■	■		
	Under voltage release		■	■			■	■			■	■			■	■		
	Manual operational mechanism		■	■			■	■			■	■			■	■		
	Motor-driven mechanism		■	■			■	■			■	■			■	■		
	Rear connection		■	■			■	■			■	■			■	■		
	Plug-in type		■	■			■	■			■	■			■	■		
	Extending terminal bonding bar		■	■			■	■			■	■			■	■		
Derivative product	For special use of prepaid ammeter		■	-			■	-			■	-			■	-		
	Overload alarm non-trip		-	-			-	-			■	■			■	■		
Dimension and size(mm) Width (w) X height (H)X depth(D)		Width (2P/3P/4P)	56/78/103				56/78/103				63/90/120				78/105/140			
		Height	135				135				155				165			
		Depth (E/S/F/H type)	71/71/81/81				71/71/81/81				75.5/75.5/91/91				77/77/102/102			

«Электро-Профи» - www.ep.ru

M

	400				630				800			1000		1250		1600	
	250,280,300,315,320,350,400				400,450,500,600,630				630, 700, 800			800,900,1000		1000, 1250		1000, 1250,1600	
	1000				1000				1000			1000		1000		1000	
	12				12				12			12		12		12	
	220/230/240, 380/400/415				220/230/240, 380/400/415				220/230/240, 380/400/415			220/230/240, 380/400/415		220/230/240, 380/400/415		220/230/240, 380/400/415	
	E	S	F	H	E	S	F	H	S	F	H	S	H	S	H	S	H
	-	-	-	-	-	-	-	-	-	-	-	-	-	-	-	-	-
	■	■	■	■	■	■	■	■	■	■	■	■	■	■	■	■	■
	■	■	■	■	■	■	■	■	■	■	■	■	■	■	■	■	■
	50	75	75	100	50	75	75	100	75	75	100	75	100	75	100	75	100
	36	50	50	70	36	50	50	70	50	50	70	50	70	50	70	50	70
	-	-	-	-	-	-	-	-	-	-	-	-	-	-	-	-	-
	50	50	75	75	50	50	75	75	50	75	75	50	75	50	75	50	75
	36	36	50	50	36	36	50	50	36	50	50	36	50	36	50	36	50
	-	-	-	-	-	-	-	-	-	-	-	-	-	-	-	-	-
	A				A				A			A		A		A	
	■				■				■			■		■		■	
	≤100				≤100				≤100			≤100		≤100		≤100	
	10000				10000				8000			5000		5000		5000	
	20000				20000				10000			10000		10000		10000	
	8000				8000				5000			2500		2500		2500	
	■	■			■	■			■	■		■	■	■	■	■	■
	■	■			■	■			■	■		■	■	■	■	■	■
	■	■			■	■			■	■		■	■	■	■	■	■
	■	■			■	■			■	■		■	■	■	■	■	■
	■	■			■	■			■	■		■	■	■	■	■	■
	■	■			■	■			■	■		■	■	■	■	■	■
	■	■			■	■			■	■		■	■	■	■	■	■
	■	■			■	■			■	■		■	■	■	■	■	■
	■	■			■	■			■	■		■	■	■	■	■	■
	■	■			■	■			■	■		■	■	■	■	■	■
	■	■			■	■			■	■		■	■	■	■	■	■
	■	■			■	■			■	■		■	■	■	■	■	■
	■	■			■	■			■	■		■	■	-	-	-	-
	■	■			■	■			■	■		■	■	-	-	-	-
	■	■			■	■			■	■		■	■	■	■	■	■
	■	-			-	-			-	-		-	-	-	-	-	-
	■	■			■	■			■	■		■	■	-	-	-	-
	140/185				140/185				182/240			210/280		210/280		210/280	
	257				257				270			280		370		370	
	108/108/108/108				108/108/108/108				113.5/113.5/113.5			117.5/117.5		152/152		1600A:157;<1600A:152	

«Электро-Профи» - www.ep.ru

Technical Parameters

NXMS series electronic moulded case circuit breaker

Frame size Inm(A)		**160**		**250**		**400**		
Rated current In(A),40℃		32、63、125、160		250		400		
Rated insulation voltage Ui(V)		800		800		1000		
Rated impulse withstand voltage Uimp(kV)		8		8		12		
Rated operational voltage Ue(V),AC 50/60Hz		220/230/240、380/400/415、690*		220/230/240、380/400/415、690*		220/230/240、380/400/415、690*		
Breaking capacity code		F	H	F	H	S	F	H
Number of poles	3P	■	■	■	■	■	■	■
	4P	■	■	■	■	■	■	■
Rated ultimate short circuit breaking capacity Icu(kA)	AC220/230/240	50	75	50	75	75	75	100
	AC380/400/415V	36	50	36	50	50	50	70
	AC690V	10	10	10	10	10	10	15
Rated service short circuit breaking capacity Ics(kA)	AC220/230/240	50	50	50	50	50	75	75
	AC380/400/415V	36	36	36	36	36	50	50
	AC690V	5	5	5	5	7.5	7.5	7.5
Rated shor-time withstand current Icw(kA),1s	AC400/415V	-		-		8		
In confromity with standard		IEC/EN 60947-2						
Utilization category		A		A		B		
Isolation function		■		■		■		
Ambient temperature		-25℃~+70℃						
Arcing distance		≤50		≤50		≤100		
Mechanical life (times)	Without maintenance	20000		20000		10000		
	With maintenance	40000		40000		20000		
Electrical life (times)	AC415V,In	10000		10000		8000		
Electric release (times)	Distribution protection	■		■		■	■	
	Motor protection	■		■		■	■	
Accessories	Auxiliary contact	■		■		■	■	
	Alarm contact	■		■		■	■	
	Auxiliary contact, alarm contact	■		■		■	■	
	Shunt release	■		■		■	■	
	Under voltage release	■		■		■	■	
	Communication module	■		■		■	■	
	Maintenance tester	■		■		■	■	
	Setting and monitoring software	■		■		■	■	
	Remote indication contact	■		■		■	■	
	Manual operational mechanism	■		■		■	■	
	Motor-driven mechanism	■		■		■	■	
	Rear connection	■		■		■	■	
	Plug-in type	■		■		■	■	
	Extending terminal bonding bar	■		■		■	■	
	Temperature monitoring module	■		■		■	■	
	Interphase barrier	■		■		■	■	
Dimension and size (mm) Width x height x depth	Width (3P/4P)	90/120		105/140		140/185		
	Height	155		165		257		
	Depth (S/H type)	91/91		102		108/108		

*690V only has CE certification

«Электро-Профи» - www.ep.ru

M

	630			1000		1250		1600	
	630			800, 1000		1250		1600	
	1000			1000		1000		1000	
	12			12		12		12	
	220/230/240、380/400/415、690*			220/230/240、380/400/415、690*		220/230/240、380/400/415、690*		220/230/240、380/400/415、690*	
	S	F	H	S	H	S	H	S	H
	■	■	■	■	■	■	■	■	■
	■	■	■	■	■	■	■	■	■
	75	75	100	75	100	75	100	75	100
	50	50	70	50	70	50	70	50	70
	10	10	15	15	20	-	30	-	30
	50	75	75	50	75	50	75	50	75
	36	50	50	36	50	36	50	36	50
	7.5	7.5	7.5	12.5	15	-	20	-	20
	8			12		19.2		19.2	
	B			B		B		B	
	■			■		■		■	
	≤100			≤100		≤100		≤100	
	10000			5000		5000		5000	
	20000			10000		10000		10000	
	8000			2500		2500		2500	
	■	■		■	■	■	■	■	■
	■	■		–	–	–	–	–	–
	■	■		■	■	■	■	■	■
	■	■		■	■	■	■	■	■
	■	■		■	■	■	■	■	■
	■	■		■	■	■	■	■	■
	■	■		■	■	■	■	■	■
	■	■		■	■	■	■	■	■
	■	■		■	■	■	■	■	■
	■	■		■	■	■	■	■	■
	■	■		■	■	■	■	■	■
	■	■		■	■	■	■	■	■
	■	■		■	■	■	■	■	■
	■	■		■	■	–	–	–	–
	■	■		■	■	–	–	–	–
	■	■		■	■	■	■	■	■
	–	–		■	■	■	■	■	■
	■	■		■	■	■	■	■	■
	140/185			210/280		210/280		210/280	
	257			280		370		370	
	108/108			117.5/117.5		152/152		157/157	

*690V only has CE certification

«Электро-Профи» - www.ep.ru

Technical Parameters

NXMLE series residual current circuit breaker (Coming soon)

Frame size Inm(A)		125			160		
Rated operational current In (A), 40℃		10,16,20,25,32,40,50, 63,80,100,125			32,40,50,80,100,125,140,160		
Rated insulation voltage Ui(V)		800			800		
Rated impulse withstand voltage Uimp(kV)		8			8		
Rated operational voltage Ue(V), AC 50/60Hz		220/230/240,380/400/415			220/230/240,380/400/415		
Rated residual operating current IΔn(mA)	Fixed single grade, non-delay type	30/50/100/200/300/500			30/50/100/200/300/500		
	Fixed single grade, delay type	50/100/200/300/500			50/100/200/300/500		
	Adjustable three grades, non-delay type	A: 30/50/100			A: 30/50/100		
		B: 50/100/200			B: 50/100/200		
		C: 100/200/300			C: 100/200/300		
		D: 200/300/500			D: 200/300/500		
	Adjustable three grades, non-delay type	B: 50/100/200			B: 50/100/200		
		C: 100/200/300			C: 100/200/300		
		D: 200/300/500			D: 200/300/500		
		-			-		
Rated residual non-operating current IΔno(A)		0.5IΔn			0.5IΔn		
Non-delay type 5IΔn, maximum breaking time(s)		≤0.04			≤0.04		
Delayed adjustable 2IΔn limit non-actuating time (s)non-adjustable		0.1/0.2/0.3, optional			0.1/0.2/0.3, optional		
Delayed adjustable 2IΔn maximum breaking time		0.3/0.4/0.5, optional			0.3/0.4/0.5, optional		
Breaking capacity code		S	F	H	S	F	H
Number of poles	1P+N	■	-	-	■	-	-
	2P	■	-	-	■	-	-
	3P	■	■	■	■	■	■
	3P+N	■	■	■	■	■	■
	4P	■	■	■	■	■	■
Rated ultimate short circuit breaking capacity Icu(kA),	AC220/230/240	36	36	50	50	50	75
	AC380/400/415	25	18	36	35	25	50
Rated service short circuit breaking capacity Ics (kA)	AC220/230/240	18	36	36	30	50	50
	AC380/400/415	13	18	18	18	25	25
In conformity with standard		IEC/EN 60947-2					
Utilization category		A			A		
Isolation function[1]		■			■		
Ambient temperature		-35℃~+70℃					
Arcing distance		≤50			≤50		
Mechanical life (times)	Without maintenance	20000			20000		
	With maintenance	40000			40000		
Electrical life (times)	AC415V,In	10000			10000		
Accessories	Auxiliary contact (1open and 1closed)	■	■		■	■	
	Auxiliary contact (2open and 2closed)	-	-		■	■	
	Alarm contact	■	■		■	■	
	Auxiliary contact, alarm contact	■	■		■	■	
	Shunt release	■	■		■	■	
	Under voltage release	■	■		■	■	
	Residual current alarm with non-trip module	-	-		■	■	
	Manual operational mechanism	■	■		■	■	
	Motor-driven mechanism	■	■		■	■	
	Rear connection	■	■		■	■	
	Plug-in type	■	■		■	■	
	Extending terminal bonding bar	■	■		■	■	
	Interphase barrier	■	■		■	■	
Dimension and sizes(mm) width(W) x height(H) x depth(D)	Width (1PN/2P/3P/3PN/4P)	56/56/76/103/103			63/63/90/120/120		
	Height	156			160		
	Depth (S type and H type)	71/81			75.5/91		

Note: [1] 1PN/3PN has no isolation function.

«Электро-Профи» - www.ep.ru

M

	250			400			630		
	125,160,180,200, 225,250			250,280,315,320,350,400			400,500,630		
	800			800			800		
	8			8			8		
	220/230/240,380/400/415			220/230/240,380/400/415			220/230/240,380/400/415		
	30/50/100/200/300/500			50/100/200/300/500/1000			50/100/200/300/500/1000		
	50/100/200/300/500			50/100/200/300/500/1000			50/100/200/300/500/1000		
	A: 30/50/100			B: 50/100/200			B: 50/100/200		
	B: 50/100/200			C: 100/200/300			C: 100/200/300		
	C: 100/200/300			D: 200/300/500			D: 200/300/500		
	D: 200/300/500			E: 300/500/1000			E: 300/500/1000		
	B: 50/100/200			B: 50/100/200			B: 50/100/200		
	C: 100/200/300			C: 100/200/300			C: 100/200/300		
	D: 200/300/500			D: 200/300/500			D: 200/300/500		
	-			E: 300/500/1000			E: 300/500/1000		
	0.5IΔn			0.5IΔn			0.5IΔn		
	≤0.04			≤0.04			≤0.04		
	0.1/0.2/0.3, optional			0.1/0.2/0.3, optional			0.1/0.2/0.3, optional		
	0.3/0.4/0.5, optional			0.3/0.4/0.5, optional			0.3/0.4/0.5, optional		
	S	F	H	S	F	H	S	F	H
	▪	-	-	-	-	-	-	-	-
	■	-	-	-	-	-	-	-	-
	■	■	■	■	■	■	■	■	■
	■	■	■	■	■	■	■	■	■
	■	■	■	■	■	■	■	■	■
	50	50	75	75	75	100	75	75	100
	35	25	50	50	36	70	50	36	70
	30	50	50	50	75	75	50	75	75
	18	25	25	25	36	36	25	36	36
				IEC/EN 60947-2					
	A			A			A		
	■			■			■		
				-35℃~+70℃					
	≤100			≤100			≤100		
	20000			10000			10000		
	40000			20000			20000		
	10000			8000			8000		
	■	■		■	■		■	■	
	■	■		■	■		■	■	
	■	■		■	■		■	■	
	■	■		■	■		■	■	
	■	■		■	■		■	■	
	■	■		■	■		■	■	
	■	■		■	■		■	■	
	■	■		■	■		■	■	
	■	■		■	■		■	■	
	■[2)]	■[2)]		■	■		■	■	
	■	■		■	■		■	■	
	■	■		■	■		■	■	
	■	■		■	■		■	■	
	78/78/105/140/140			-/-/140/185/185			-/-/140/185/185		
	170			267			267		
	77/80			108/108			108/108		

«Электро-Профи» - www.ep.ru

Technical Parameters

NXHM* series disconnector switch (Coming soon)

Conventional thermal current Ith(A), 40℃			**63**	**125**	**160**
Rated current Ie (A)			63	125	160
Rated insulation voltage Ui (V)			800	800	800
Rated impulse withstand voltage Uimp (kV)			8	8	8
Rated operational voltage Ue (V),AC 50/60Hz			400/415	400/415	400/415,690
Number of poles			3P/4P	3P/4P	3P/4P
Rated short-time withstand current ICW (peak value A)AC 400/415V		1s	800	1500	2000
In conformity with standards		IEC/EN/ 60947-3			
Utilization category			AC-22A/AC-23A	AC-22A/AC-23A	AC-21A(B)/AC-22A(B)
Ambient temperature	-35℃~+70℃				
Arcing distance	≤50		≤50	≤50	≤50
Mechanical life (times)	Without maintenance		20000	20000	20000
	With maintenance		40000	40000	40000
Electrical life (times)	AC415V,In		10000	10000	10000
Accessories	Auxiliary contact		■	■	■
	Alarm contact		■	■	■
	Auxiliary contact, alarm contact		■	■	■
	Shunt release		■	■	■
	Under voltage release		■	■	■
	Manual operational mechanism		■	■	■
	Motor-driven mechanism		■	■	■
	Rear connection		■	■	■
	Plug-in		■	■	—
	Extending terminal bonding bar		■	■	■
	Interphase barrier		■	■	■
Dimension and sizes (mm Width(W) x height(H) x depth(D))	Width (3P//4P)		78/103	78/103	90/120
	Height		135	135	155
	Depth		71	71	75.5

*NXHM series product only has CE certification

«Электро-Профи» - www.ep.ru

M

250	400	630	800	1000
250	400	630	800	1000
1000	1000	1000	1000	1000
8	12	12	12	12
380/400/415/690	400/415/690	400/415/690	400/415/690	400/415/690
3P/4P	3P/4P	3P/4P	3P/4P	3P/4P
4000	5000	7800	10000	12000
IEC/EN 60947-3				
AC-21A(B)/AC-22A(B)	AC-21A(B)/AC-22A(B)	AC-21A(B)/AC-22A(B)	AC-21A(B)/AC-22A(B)	AC-21A(B)/AC-22A(B)
-35℃~+70℃				
≤50	≤100	≤100	≤100	≤100
20000	10000	10000	8000	5000
40000	20000	20000	10000	10000
10000	8000	8000	5000	2500
■	■	■	■	■
■	■	■	■	■
■	■	■	■	■
■	■	■	■	■
■	■	■	■	■
■	■	■	■	■
■	■	■	■	■
■	■	■	■	■
■	■	■	■	■
■	■	■	■	■
■	■	■	■	■
105/140	140/185	140/185	182/240	210/280
165	257	257	270	280
77	108	108	113.5	117.5

*NXHM series product only has CE certification

«Электро-Профи» - www.ep.ru

Protection Feature

Distribution protection –Only magnetic release

Only magnetic release	Frame size I_{nm}(A)	Rated current I_n(A)	Setting of short circuit protection current	Setting value of short circuit protection current I_i(A) and allowance	Release time
Short circuit protection	63	10~63	Fixed	$10I_n$, ±20%	Instantaneous action
	125	10~125	Fixed	$10I_n$, ±20%	
	160	32~160	Fixed	$10I_n$, ±20%	
	250	125~250	Fixed	$10I_n$, ±20%	
	400	250~400	Fixed	$10I_n$, ±20%	
	630	400~630	Fixed	$10I_n$, ±20%	
	800	630~800	Fixed	$10I_n$, ±20%	
	1000	800~1000	Fixed	$10I_n$, ±20%	
	1250	1000~1250	Adjustable	I_i : (7-8-9-10) I_n	
	1600	1000~1600	Adjustable	I_i : (7-8-9-10) I_n	

	Frame size I_{nm}(A)	Rated current I_n(A)	Setting of neutral pole protection current	Setting value of neutral pole short circuit protection current (A) and allowance	Release time
Neutral pole protection (code of N poles C/D)	63	10~63	Fixed	I_i, ±20%	Instantaneous action
	125	10~125	Fixed	I_i, ±20%	
	160	32~160	Fixed	I_i, ±20%	
	250	125~250	Fixed	I_i, ±20%	
	400	250~400	Fixed	I_i, ±20%	
	630	400~630	Fixed	I_i, ±20%	
	800	630~800	Fixed	I_i, ±20%	
	1000	800~1000	Fixed	I_i, ±20%	
	1250	1000~1250	Adjustable	I_i : (7-8-9-10) I_n	
	1600	1000~1600	Adjustable	I_i : (7-8-9-10) I_n	

«Электро-Профи» - www.ep.ru

M

Distribution protection—Thermal magnetic release

Thermal magnetic release	Frame size I_{nm}(A)	Rated current I_n(A)	Setting of overcurrent protection	Release feature
Overload protection	63A~1000A	10A~1000A	Fixed	I^2t=constant 1.05I_n(cold state), 2h non-trip(I_n > 63A), 1h non-trip(I_n≤63A) 1.30I_n(heat state), 2h trip(I_n > 63A), 1h trip(I_n≤63A)
	1600	1000A~1600A	Adjustable	I_R adjustable range: (0.7-0.8-0.9-1)In

Thermal magnetic release	Frame size I_{nm}(A)	Rated current I_n(A)	Setting of short circuit protection current	Setting value of short circuit protection current I_i(A) and allowance	Release time
Short circuit protection	63	10~63	Fixed	10I_n , ±20%	Instantaneous action
	125	10~125	Fixed	10I_n , ±20%	
	160	32~160	Fixed	10I_n , ±20%	
	250	125~250	Fixed	10I_n , ±20%	
	400	250~400	Fixed	10I_n , ±20%	
	630	400~630	Fixed	10I_n , ±20%	
	800	630~800	Fixed	10I_n , ±20%	
	1000	800~1000	Fixed	10I_n , ±20%	
	1250	1000~1250	Adjustable	I_i : (7-8-9-10) I_n	
	1600	1000~1600	Adjustable	I_i : (7-8-9-10) I_n	

	Frame size I_{nm}(A)	Rated current I_n(A)	Setting of neutral pole protection current	Setting value of neutral pole overload protection current(A)setting value neutral pole short circuit protection current(A)
Neutral pole protection (code of N pole C/D)	63	10~63	Fixed	I_R , I_i , ±20%
	125	10~125	Fixed	I_R , I_i , ±20%
	160	32~160	Fixed	I_R , I_i , ±20%
	250	125~250	Fixed	I_R , I_i , ±20%
	400	250~400	Fixed	I_R , I_i , ±20%
	630	400~630	Fixed	I_R , I_i , ±20%
	800	630~800	Fixed	I_R , I_i , ±20%
	1000	800~1000	Fixed	I_R , I_i , ±20%
	1250	1000~1250	Adjustable	I_i : (7-8-9-10) I_n
	1600	1000~1600	Adjustable	I_i : (7-8-9-10) I_n

«Электро-Профи» - www.ep.ru

Protection Feature

Distribution protection—Electronic release

Electronic release	Frame size I_{nm}(A)	Rated current I_n(A)	Setting of overcurrent protection I_R (A)	Release feature/time
Overload long-time-delay protection	160	32	16-18-20-22-25-28-30-32	I^2t=constant 1.05I_R, no action within 2h 1.3I_R, action with 1h 2I_R, t_R=(12-60-80-100)s, I_{nm} < 400A 2I_R, t_R=(12-60-100-150)s, I_{nm}≥400A
		63	32-36-40-45-50-56-60-63	
		125	63-70-75-80-90-100-110-125	
		160	80-90-100-110-125-140-150-160	
	250	250	125-140-150-160-180-200-225-250	
	400	400	200-225-250-280-300-315-350-400	
	630	630	400-450-480-500-530-560-600-630	
	1000	800	630-660-680-700-720-750-780-800	
		1000	630-680-720-780-820-900-950-1000	
	1250	1250	630-700-800-900-1000-1100-1200-1250	
	1600	1600	800-900-1000-1100-1250-1400-1500-1600	
Action allowance				±10%
Short circuit short-time-delay protection	All series	32~1600	I_{sd}=(1.5-2-3-4-5-6-8)I_R+OFF	t_{sd}=0.3,±0.06s
Action allowance			±15%	
Instantaneous protection	160~1600	32~1600	I_i=(2-3-4-6-8-10-12)I_R+OFF	Instantaneous action
Action allowance			±15%	
Neutral pole protection (code of four pole C/D)	All series	32~1600	I_{RN}=(0.5 ,1)I_n+OFF, Adjustable	
Indication of overload	All series	32~1600	I_{R0}=1.2I_R	

«Электро-Профи» - www.ep.ru

M

Distribution protection—Only magnetic release + residual current release

Only magnetic release	Frame size I_{nm}(A)	Rated current I_n(A)	Setting of short circuit protection current	Setting value of short circuit protection current I_i(A) and allowance	Release time
Short circuit protection	125	10~125	Fixed	$10I_n$, ±20%	Instantaneous action
	160	125,160	Fixed	$10I_n$, ±20%	
	250	160~250	Fixed	$10I_n$, ±20%	
	400	315~400	Fixed	$10I_n$, ±20%	
	630	400~630	Fixed	$10I_n$, ±20%	
	800	630~800	Fixed	$10I_n$, ±20%	

	Frame size I_{nm}(A)	Residual current Release type	Residual current release type	Setting value of rated residual current $I_{\Delta n}$ (A)	Release time
Residual action current protection	125/160/250	AC Type	Non delay: single grade and non-adjustable	30/50/100/200/300/500	
			Three grades and adjustable	A/B/C/D	
			Delay type: single grade and non-adjustable	50/100/200/300/500	
			Three grades and adjustable	B/C/D	
	400/630	AC Type	Non delay: single grade and non-adjustable	50/100/200/300/500/1000	
			Three grades and adjustable	B/C/D/E	
			Delay type: single grade and non-adjustable	50/100/200/300/500/1000	
			Three grades and adjustable	B/C/D/E	

Non-delay type 5IΔn maximum breaking time(s)	≤0.4		
Delay type 2IΔn limit non-driving time (s) Adjustable	0.1	0.2	0.3
Delay type 2IΔn maximum breaking time(s) Adjustable	0.3	0.4	0.5

«Электро-Профи» - www.ep.ru

Protection Feature

Distribution protection—Thermal magnetic release+ residual current release

Thermal magnetic release	Frame size I_{nm}(A)	Rated current In(A)	Overload protection current Setting	Release feature
Overload protection	All series	10A~800A	Fixed	I^2t=constant 1.05 I_n(cold state), 2h non-release(I_n > 63A),1h non-release(I_n≤63A) 1.30 I_n(heat state), 2h release(I_n > 63A),1h release(I_n≤63A)

	Frame size I_{nm}(A)	Rated current I_n(A)	Setting of short circuit protection current	Setting value of short circuit protection current I_i(A) and allowance	Release time
Short circuit protection	125	10~125	Fixed	10I_n, ±20%	Instantaneous action
	160	125,160	Fixed	10I_n, ±20%	
	250	160~250	Fixed	10I_n, ±20%	
	400	315~400	Fixed	10I_n, ±20%	
	630	400~630	Fixed	10I_n, ±20%	

	Frame size I_{nm}(A)	Residual current release type		Setting value of rated residual current $I_{\Delta n}$(A)	Release time
Residual current protection	125/160/250	AC type	Non delay: single grade and non-adjustable	30/50/100/200/300/500	
			Three grades and adjustable	A/B/C/D	
			Delay type: single grade and non-adjustable	50/100/200/300/500	
			Three grades and adjustable	B/C/D	
	400/630	AC type	Non delay: single grade and non-adjustable	50/100/200/300/500/1000	
			Three grades and adjustable	B/C/D/E	
			Delay type: single grade and non-adjustable	50/100/200/300/500/1000	
			Three grades and adjustable	B/C/D/E	

Non-delay type 5IΔn maximum breaking time(s)	≤0.4		
Delay type 2IΔn limit non-driving time (s) Adjustable	0.1	0.2	0.3
Delay type 2IΔn maximum breaking time(s) Adjustable	0.3	0.4	0.5

«Электро-Профи» - www.ep.ru

M

Motor protection—Only magnetic release

Only magnetic release	Frame size I_{nm}(A)	Rated current I_n(A)	Setting of short circuit protection current	Setting value of short circuit protection current I_i(A) and allowance	Release time
Short circuit protection	63	10~63	Fixed	$12I_n$, ±20%	Instantaneous action
	125	10~125	Fixed	$12I_n$, ±20%	
	160	32~160	Fixed	$12I_n$, ±20%	
	250	125~250	Fixed	$12I_n$, ±20%	
	400	250~400	Fixed	$12I_n$, ±20%	
	630	400~630	Fixed	$12I_n$, ±20%	
	800	630~800	Fixed	$12I_n$, ±20%	

	Frame size I_{nm}(A)	Rated current I_n(A)	Setting of neutral pole protection current	Setting value of neutral pole overload protection current(A) Setting value neutral pole short circuit protection current(A)
Neutral pole protection (code of N pole C/D)	63	10~63	Fixed	I_R, I_i, ±20%
	125	10~125	Fixed	I_R, I_i, ±20%
	160	125,160	Fixed	I_R, I_i, ±20%
		125,160	Fixed	I_R, I_i, ±20%
	250	160~250	Fixed	I_R, I_i, ±20%
	400	315~400	Fixed	I_R, I_i, ±20%
	630	400~630	Fixed	I_R, I_i, ±20%
	800	630~800	Fixed	I_R, I_i, ±20%

«Электро-Профи» - www.ep.ru

Protection Feature

Motor protection—Thermal magnetic release

Thermal magnetic release	Frame size I_{nm}(A)	Rated current I_n(A)	Setting of overcurrent protection	Release feature
Overload protection	125~800	25~630A	Fixed	I^2t=constant 1.0In(cold state), ＞2h non release 1.2In(hot state), ≤2h release 7.2In(hot state),4s≤T≤10s, 10A≤In≤225A 6s≤T≤20s, 225A＜In≤630A(including 800A frame 630A) Trip class: 10(≤160A), 20(160A＜In≤630A)

Thermal magnetic release	Frame size I_{nm}(A)	Rated current I_n(A)	Setting of short circuit protection current	Setting value of short circuit protection current I_i(A) and allowance	Release time
Short circuit protection	63	10~63	Fixed	$12I_n$, ±20%	Instantaneous action
	125	10~125	Fixed	$12I_n$, ±20%	
	160	32~160	Fixed	$12I_n$, ±20%	
	250	125~250	Fixed	$12I_n$, ±20%	
	400	250~400	Fixed	$12I_n$, ±20%	
	630	400~630	Fixed	$12I_n$, ±20%	
	800	630~800	Fixed	$12I_n$, ±20%	

	Frame size I_{nm}(A)	Rated current I_n(A)	Setting of neutral pole protection current	Setting value of neutral pole overload protection current(A) Setting value neutral pole short circuit protection current(A)
Neutral pole protection (code of N pole C/D)	63	10~63	Fixed	I_R I_i ±20%
	125	10~125	Fixed	I_R I_i ±20%
	160	125,160	Fixed	I_R I_i ±20%
		125,160	Fixed	I_R I_i ±20%
	250	160~250	Fixed	I_R I_i ±20%
	400	315~400	Fixed	I_R I_i ±20%
	630	400~630	Fixed	I_R I_i ±20%
	800	630~800	Fixed	I_R I_i ±20%

«Электро-Профи» - www.ep.ru

M

Motor protection—Electronic release

<table>
<tr><th>Electronic release</th><th>Frame size I_{nm} (A)</th><th>Rated current I_n (A)</th><th>Setting of overcurrent protection I_R (A)</th><th>Release feature/time</th></tr>
<tr><td rowspan="8">Overload long-time-delay protection</td><td rowspan="6">160</td><td>32</td><td>16-18-20-22-25-28-30-32</td><td rowspan="8">I^2t=constant
<table><tr><td>$1.05I_R$</td><td colspan="4">No actuation within 2h</td></tr><tr><td>$1.2I_R$</td><td colspan="4">Actuation within 1h</td></tr><tr><td>Release class</td><td>10A</td><td>10</td><td>20</td><td>30</td></tr><tr><td>$1.5I_R$</td><td>53</td><td>107</td><td>178</td><td>267</td></tr><tr><td>$2I_R$</td><td>30</td><td>60</td><td>100</td><td>150</td></tr><tr><td>$7.2I_R$</td><td>2.3</td><td>4.6</td><td>7.7</td><td>11.6</td></tr><tr><td colspan="5">Delay time accuracy: ±20%</td></tr></table></td></tr>
<tr><td>63</td><td>32-36-40-45-50-56-60-63</td></tr>
<tr><td>100</td><td>63-70-75-80-85-90-95-100</td></tr>
<tr><td>125</td><td>63-70-75-80-90-100-110-125</td></tr>
<tr><td>160</td><td>80-90-100-110-125-140-150-160</td></tr>
<tr><td>200</td><td>100-125-140-150-160-170-180-200</td></tr>
<tr><td>250</td><td>250</td><td>125-140-150-160-180-200-225-250</td></tr>
<tr><td>400</td><td>400</td><td>200-225-250-280-300-315-350-400</td></tr>
<tr><td>630</td><td>630</td><td>400-450-480-500-530-560-600-630</td></tr>
<tr><td colspan="3">Operation allowance</td><td>±20%</td></tr>
<tr><td>Short circuit short-time-delay protection</td><td>160~630</td><td>32~630</td><td>I_{sd}=(1.5-2-3-4-5-6-8)I_R+OFF</td><td rowspan="2">t_{sd}=0.3,±0.06s</td></tr>
<tr><td colspan="3">Operation allowance</td><td>±15%</td></tr>
<tr><td>Instantaneous protection</td><td>160~630</td><td>32~630</td><td>I_i=(2-4-6-8-10-12-14)I_R+OFF</td><td rowspan="2">Instantaneous action</td></tr>
<tr><td colspan="3">Operation allowance</td><td>±15%</td></tr>
<tr><td>Neutral pole protection (N pole code C/D)</td><td>160~630</td><td>32~630</td><td>I_{RN}= (0.5, 1)I_R+OFF, adjustable</td><td></td></tr>
<tr><td>Overload indication</td><td>160~630</td><td></td><td>I_{RO}=1.2I_R</td><td></td></tr>
</table>

«Электро-Профи» - www.ep.ru

Protection Feature

Motor protection—Only magnetic release + residual current release

Only magnetic release	Frame size I_{nm} (A)	Rated current I_n (A)	Setting of short circuit protection current	Setting value of short circuit protection current I_i (A) and allowance	Release time
Short circuit protection	125	10~125	Fixed	$12I_n$, ±20%	Instantaneous action
	160	125,160	Fixed	$12I_n$, ±20%	
	250	160~250	Fixed	$12I_n$, ±20%	
	400	315~400	Fixed	$12I_n$, ±20%	
	630	400~630	Fixed	$12I_n$, ±20%	

	Frame size I_{nm} (A)	Residual current Release type	Residual current release type	Setting value of rated residual current $I_{\Delta n}$(A)	Release time
Residual action current protection	125/160/250	AC type	Non delay: single grade and non-adjustable	30/50/100/200/300/500	
			Three grades and adjustable	A/B/C/D	
			Delay type: single grade and non-adjustable	50/100/200/300/500	
			Three grades and adjustable	B/C/D	
	400/630	AC type	Non delay: single grade and non-adjustable	50/100/200/300/500/1000	
			Three grades and adjustable	B/C/D/E	
			Delay type: single grade and non-adjustable	50/100/200/300/500/1000	
			Three grades and adjustable	B/C/D/E	

Non-delay type 5IΔn maximum breaking time(s)	≤0.4		
Delay type 2IΔn limit non-driving time (s) Adjustable	0.1	0.2	0.3
Delay type 2IΔn maximum breaking time(s) Adjustable	0.3	0.4	0.5

Motor protection—Thermal magnetic release+ residual current release

Thermal magnetic release	Frame size I_{nm} (A)	Rated current I_n (A)	Overload protection current setting	Release feature
Overload protection	125~800	25A~630A	Stationary	I^2t=constant 1.0In (cold state),>2h non release 1.2In (hot state),≤2h release 1.5In (hot state),≤4min, 10A≤In≤225A ≤8min, 225A < In≤630A (including800A housing 630A) 7.2In (hot state),4s≤T≤10s, 10A≤In≤225A 6s≤T≤20s, 225A < In≤630A (including800A housing 630A) release class: 10 (≤160A), 20 (160A < In≤630A)

«Электро-Профи» - www.ep.ru

M

Motor protection—Thermal magnetic release+ residual current release

Thermal magnetic release	Frame size I_{nm} (A)	Rated current I_n (A)	Setting of short circuit protection current	Setting value of short circuit protection current Ii (A) and allowance	Release time
Short circuit protection	63	10~63	Stationary	$12I_n$ ±20%	Instantaneous action
	125	10~125	Stationary	$12I_n$ ±20%	
	160	125,160	Stationary		
		125,160	Stationary	$12I_n$ ±20%	
	250	160~250	Stationary	$12I_n$ ±20%	
	400	315~400	Stationary	$12I_n$ ±20%	
	630	400~630	Stationary	$12I_n$ ±20%	

	Frame size I_{nm} (A)	Residual current release type	Residual current release type	Setting value of rated residual current $I_{\Delta n}$ (A)	Trip time
Residual current protection	125/160/250	AC type	Non delay: single grade and non-adjustable	30/50/100/200/300/500	
			Three grades and adjustable	A/B/C/D	
			Delay type: single grade and non-adjustable	50/100/200/300/500	
			Three grades and adjustable	B/C/D	
	400/630	AC type	Non delay: single grade and non-adjustable	50/100/200/300/500/1000	
			Three grades and adjustable	B/C/D/E	
			Delay type: single grade and non-adjustable	50/100/200/300/500/1000	
			Three grades and adjustable	B/C/D/E	

Non-delay type 5IΔn maximum breaking time(s)	≤0.4		
Delay type 2IΔn limit non-driving time (s) Adjustable	0.1	0.2	0.3
Delay type 2IΔn maximum breaking time(s) Adjustable	0.3	0.4	0.5

«Электро-Профи» - www.ep.ru



AX-M3 auxiliary contact



Schematic diagram of assembly of auxiliary contact with the body

Inner Accessories

AX auxiliary contact

Function: Remote indication of "ON" , "OFF" position of the breaker, connect to the control circuit of breaker.

Model description

AX-□□□□

- Applicable product: general (omit) , residual current type (LE)
- Applicable product poles: 2P(2), general (omit)
- Installation site code : left side installation (code L) and right side installation (code R)
- Frame size code (see table1)
- Name code of auxiliary contact

Table1 Frame size code

Frame size	63/125	160	250	400/630	800	1000	1250/1600
Code	M1	M2	M3	M4	M5	M6	M7

For example: 63/125 frame right auxiliary contact code: AX-M1R

To indicate the "ON" or "OFF "state of circuit breaker

AX	Opening or free trip OFF & TRIP	FX12 FX14	FX11
	Closing ON	FX12 FX14	FX11

Electrical characteristics

Operational voltage (V)		AC-15	DC-13	
		AC380/400/415	DC110	DC220/250
Operational current (A)	63~320	0.26	0.14	0.14
	400~1000	0.4	0.2	0.2
	1250,1600	0.47	0.27	0.27

Wiring diagram

Auxiliary contact can be wired with indicator light.
The operator can know the location of switch " ON " or " OFF "
without open the power
distribution cabinet via indicator light.

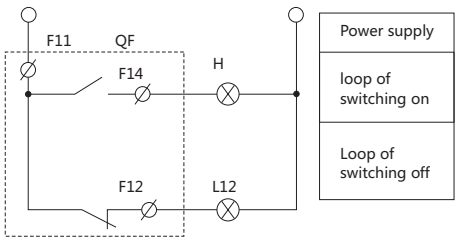

«Электро-Профи» - www.ep.ru

M

Inner Accessories



AL-M6 alarm contact



Schematic diagram of assembly of alarm contact with the body

AL alarm contact

Function: It is mainly used to provide signal in case of failure of circuit breaker or free trip.
Reasons for alarm contact to send failure indication signal:

- Overload or short circuit trip
- Under voltage trip
- Residual current operated trip
- Manual free trip

Model description

AL-□□□□

- Applicable product: general (omit) , residual current type (LE)
- Applicable product poles: 2P(2), general (omit)
- Installation site code : left side installation (code L) and right side installation (code R)
- Frame size code (see table1)
- Name code of alarm contact

For instance: the left alarm contact code of 63/125 frame is: AL-M1L

Table1 frame size code

Frame size	63/125	160	250/320	400/630	800	1000
Code	M1	M2	M3	M4	M5	M6

To indicate the "ON" or "OFF " state of circuit breaker

AL	Open or close OFF & ON	B12 B14		B11
	TRIP	B12 B14		B11

Electrical characteristics

Operational voltage (V)		AC-15	DC-13	
		AC380/400/415	DC110	DC220/250
Operational current (A)	63~320	0.26	0.14	0.14
	400~1000	0.4	0.2	0.2
	1250,1600	0.47	0.27	0.27

Wiring diagram

Alarm contact can be connected with indicator light, buzzer and the like, and thus the operator can be timely informed in case of release of circuit breaker.

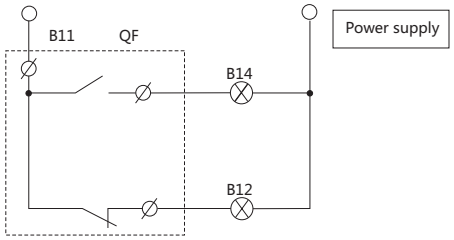

«Электро-Профи» - www.ep.ru



UV T-M4 under voltage release



Schematic diagram of assembly of under voltage release and non-release module with the body

Inner Accessories

UVT under voltage release

Function: To switch off the circuit breaker in case of under voltage of power supply so as to protect the electric equipment.

- The under voltage release shall switch off the circuit breaker reliably when the power supply voltage decreases (or even decrease slowly) to 70%-35% of rated control power supply voltage.
- It shall ensure the closing of breaker when the power supply voltage equals to or is more than 85% of rated control power supply voltage of under voltage release.
- The under voltage release shall be able to prevent closing of circuit breaker when the supply voltage is less than 35% of rated control supply voltage of under voltage release.

Model description

UVT-□□□□□

- Applicable product: Thermal-magnetic (omit) , residual current type(LE): Electronic(E)
- Applicable product poles: 2P(2), general (omit)
- Installation site code : left side installation (code L) and right side installation (code R)
- Applicable voltage code (see table2, only A1, A2 are applicable)
- Frame size code (see table1)
- Name code of under voltage release

Table2 Applicable voltage code

For example: right under voltage release code of 63/125 frame 400V: UV T-M1A2

Table1 frame size code

Frame size	63/125	160	250/320	400/630	800	1000	1250/1600
Code	M1	M2	M3	M4	M5	M6	M7

Voltage	AC220V/230V/240V	AC380V/400V/415V	DC24V	DC110V	DC220V
Code	A1	A2	D1	D2	D3

Electrical characteristics

Frame size (A)	Under voltage release code (VA or W)	
	AC220V/230V/240V	AC380V/400V/415V
63/125	3.1	4
160	3.2	3.9
250/320	3.3	4.3
400/630	2.5	3.6
800	1.6	2
1000	1.6	2
1600	1.6	2

Operating characteristics

Operating conditions (XU_e)	Switching off reliably	35%~70%
	Preventing closing	≤35%
	Closing reliably	≥85%
Response time		1s
Operation times		1000

«Электро-Профи» - www.ep.ru

Wiring diagram

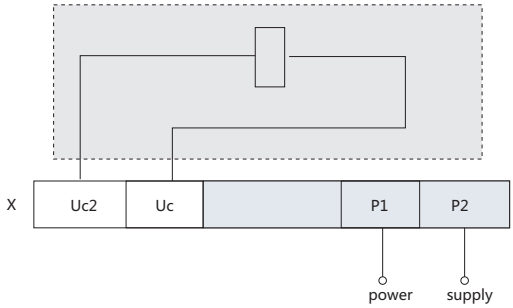

«Электро-Профи» - www.ep.ru



SHT-M2 shunt release



Schematic diagram of assembly of shunt release with the body

Inner Accessories

SHT shunt release

Function: Shunt release is an accessory for remote control.
The shunt release shall be able to make circuit breaker operating reliably when the power voltage equals to any voltage within the range of 70%~110% of rated control power voltage.

Model description

SHT-□□□□□

- Applicable product: general (omit) , residual current type (LE)
- Applicable product poles: 2P(2), general (omit)
- Installation site code : left side installation (code L) and right side installation (code R)
- Applicable voltage code (see table2, only A1, A2 are applicable)
- Frame size code (see table1)
- Name code of shunt release

For example: left shunt release code of 63/125 housing 400V: SHT-M1A2L

Table1 frame size code

Frame size	63/125	160	250/320	400/630	800	1000	1250/1600
Code	M1	M2	M3	M4	M5	M6	M7

Table2 Applicable voltage code

Voltage	AC220V/230V/240V	AC380V/400V/415V	DC24V	DC110V	DC220V
Code	A1	A2	D1	D2	D3

Electrical characteristics

Frame size(A)	Code of under voltage release (VA or W)				
	AC220V/230V/240V	AC380V/400V/415V	DC24V	DC110V	DC220V
63/125	76	91.5	91	80	136
160	73	96.5	91	52.8	71
250/320	68.5	112	85.3	58	66
400/630	62.5	68	100	105	56
800	153	168	120	105	56
1000	153	163	120	105	56
1250/1600	175	183	140	143	286

Operating characteristics

Reliable operating voltage		70%~110%XU_s
Conduction time (pulse mode)	minimum	10ms
	maximum	1s
Response time		30ms
Number of operations		1000

«Электро-Профи» - www.ep.ru

Wiring diagram

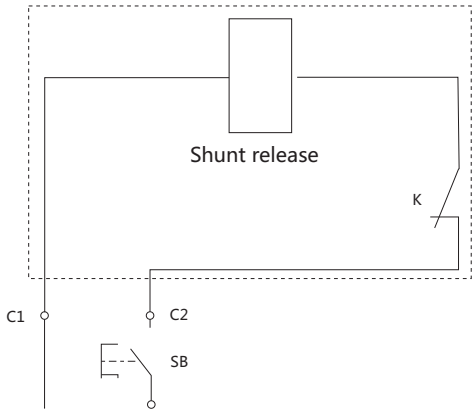

«Электро-Профи» - www.ep.ru



MD-M2 electric operational mechanism



Schematic diagram of assembly of motor-driven mechanism with the body

External Accessories

MD motor-driven mechanism

Function: it is applicable for switching circuit breaker on and off and retrip remotely, as well as automation application.

Model description

MD - □□□□

- Applicable product: Thermal-magnetic (omit), Electronic type (E), residual current type (LE).
- Product breaking capacity: General (omit), S,H.
- Applicable voltage code (see table2, only A1, A2 are applicable)
- Frame size code (see table1)
- Name code of motor-driven mechanism

For example: motor driven code of 63/125 frame moulded case circuit breaker 400V: MD-M1A2

Table1 frame size code

Frame size	63/125	160	250/320	400/630	800	1000	1250/1600
Code	M1	M2	M3	M4	M5	M6	M7

Table2 Applicable voltage code

Voltage	AC220V/230V/240V	AC380V/400V/415V	DC24V	DC110V	DC220V
Code	A1	A2	D1	D2	D3

Electrical characteristics

Category / Model	63/125/250/320 frame	All series
Structural style	Electromagnet	DC-AC
Voltage specification	AC230V, 400V	AC110V, 230V, 400V, AC220V, 230V, 240V, AC380V, 400V, 415V, DC24V, 110V, 220V, DC110V, 220V
Rated frequency	50Hz	50/60 Hz

Wiring diagram

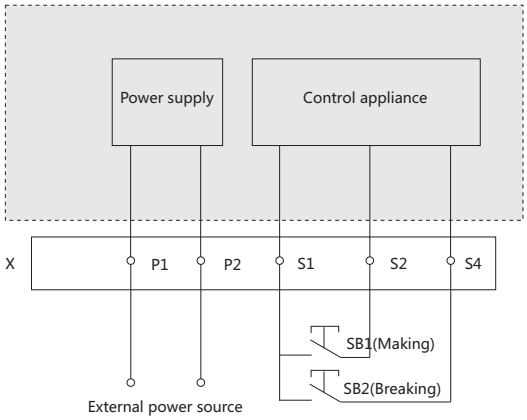

Description: SB1, SB2 is separately the on and off button;

P1, P2 are the external power line terminal. P1 will be connected to "+", and P2 will be connected to "-" if the external power source is DC.

«Электро-Профи» - www.ep.ru

M

Motor-driven mechanism

Installation sketch of electric operational mechanism

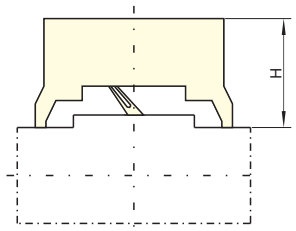

Frame size	63A / 125A	160A	250A / 320A	400A / 630A	800A	1000A	1250/1600A
Installation size H(mm)	93	97	97.5	154	153	154.5	156

«Электро-Профи» - www.ep.ru



ERH-M6



Scheme diagram of assembly of manual operational mechanism with the body



PIA-M2

External Accessories

ERH manual operational mechanism

Function: It realizes switching on, off and restriping via rotary handle according to human body mechanics with unique design and transmission device.

Model description

ERH - □□

- Category code of adaptive products: thermal magnetic type; electronic type (no code) residual current (code LE)
- Frame size (table 1)
- Name code of manual operational mechanism

For example: manual operational mechanism code of 63/125 frame residual current operating: ERH-M1LE

Table1 frame size code

Frame size	63/125	160	250/320	400/630	800	1000	1250/1600
Code	M1	M2	M3	M4	M5	M6	M7

Installation diagram of manual operational mechanism

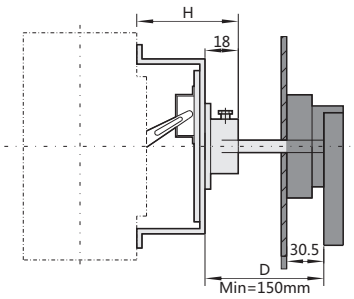

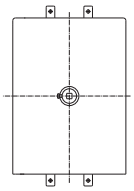

frame current : 63, 125, 160, 250, 400, 630, 800, 1000

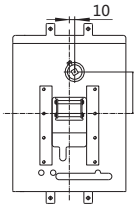

frame current : 1250, 1600

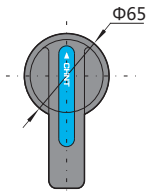

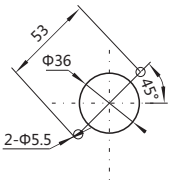

Frame size	63A / 125A	160A	250A / 320A	400A / 630A	800A	1000A	1250/1600A
Installation sizes(mm)	53.5	61.5	63.5	98	97	97	68.5

«Электро-Профи» - www.ep.ru

M

PIA plug-in basement

Function: It is convenient to replace moulded case circuit breaker without disassembling inlet-outlet line.
Model description

PIA-□□

- Applicable product poles: 3(3p),4(4p)
- Frame size code(see table1)
- Name code of plug-in basement

For example: plug-in basement code of 160 frame three-pole circuit breaker: PIA-M2 3

«Электро-Профи» - www.ep.ru



FCP-M4



Assembly scheme diagram of front connection plate and the body



RCP-M3



Assembly scheme diagram of rear connection plate and the body

External Accessories

FCP front connection plate

Function: It grants the breaker a flexible line connecting way. The phase spacing can increase via accessories so as to increase the electrical space between the adjacent phases of line terminal of input and output of breaker, and thus increase the safety among the lines.

Model description:

FCP - □□

- Pole number code of adaptive product: two poles (code 2), three poles (code 3), four poles (code 4)
- Frame size code (table 1)
- Name code of front connection plate

For example: 63/125 frame three-pole circuit front connection place code: FCP-M13

Table1 frame size code

Frame size	63/125	160	250/320	400/630	800	1000	1250/1600
Code	M1	M2	M3	M4	M5	M6	M7

RCP rear connection plate

Function: It grants the breaker with flexible line connecting way, which is used to match the switch board or other requirements so as to realize the line connecting on the back of the installation plate.

Model description

RCP - □□

- Pole number code of adaptive product: two poles (code 2), three poles (code 3), four poles (code 4)
- Frame size code (table 1)
- Name code of rear connection plate

For example: 63/125 frame three-pole circuit breaker with rear connection plate code: RCP-M 13

Table1 frame size code

Frame size	63/125	160	250/320	400/630	800	1000	1250/1600
Code	M1	M2	M3	M4	M5	M6	M7

«Электро-Профи» - www.ep.ru



PTU-1



Data interface



Charging interface



Navigation key interface

External Accessories

Handheld test module (PTU-1)

Handheld test module is the extension of the circuit breaker function, it can connection circuit breaker through USB interface, also the information of circuit breaker can be displayed in the handheld test module. User can query and set the parameters of the circuit breaker as needed. Users can easily monitor and repair the circuit breaker.

- Features:
- Query the factory parameters, shell current, rated current, communication address and other informations of the circuit breaker;
- Query overload long delay, short delay, short circuit instantaneous, N phase protection, ground fault current value,operating time and other settings parameters;
- Query real-time phase current value of the circuit breaker ABCN phase, the last fault alarm current parameter value;
- Set the protection characteristic parameter of circuit breaker.(Not available for Dial-type electronic circuit breakers);
- Can set the display brightness, screensaver power, serial communication parameters and circuit breaker communication address;
- Circuit breaker analog signal trip test.

characteristic:

Power supply	Single 14500 lithium-ion battery
Battery capacity	≥800mAh
Operational Voltage	3.7 ~ 4.2V
Charging method	USB +5V
Control mode	Pushbutton
LCD screen	3.2 inch TFT color, vertical screen display
Backlight brightness	1~100 level adjustment
Screensaver saving	30 to 120 seconds can be set, can be closed
Battery power monitoring	Yes
Continuous working hours	2h
Operating temperature	-25℃ ~ +70℃
Wired communication	Protocol : Modbus-RTU Serial communication rate : 1200/2400/4800/9600/19200bps

- Operating:
- Use five navigation keys with three shortcuts and one power key, it can provide users with simple and quick operation experience;
- The five navigation keys default to up, down, left, right, and confirmation;
- The three shortcut keys are R, W, T, respectively, for the read parameters, set the parameters of the test test trip;
- Power key press two seconds to switch operation, and operating tips are on the bottom of each pages.

«Электро-Профи» - www.ep.ru



COMA-3



R485 Connection port



Circuit breaker communication interface

External Accessories

Modbus Communication module(COMA-3)

COMA-3 external Modbus communication module (Electronic type) is the extension of the circuit breaker function. Through the connection with the circuit breaker communication interface to achieve the physical layer of signal conversion. The interface of the RS485 communication module can be connected to the host computer and realize the remote function of the circuit breaker.

- Features:
- Built-in power supply module, can connect with an external power of 220V AC or 24V DC;
- Features:The communication module will supplies power to the circuit breaker electronic release;
- Features:Can convert the communication single between the circuit breaker and host computer;
- Features:Remote control of two relay output by receiving the instructions of the host computer;
- Features:Meet the users` need of the circuit breaker network construction.

- Characteristic:

Voltage	DC24V
Power consumption	≤2.8W
Communication rate	RS485 Communication baud rate : 1200/2400/4800/9600/19200 bps
Relay output capacity	5A , DC 30V
Operating temperature	-25℃~ +70℃

- Installation
- Installation via DIN35-7.5 standard rail.

«Электро-Профи» - www.ep.ru

Complementary Technical Data

Altitude reducing capacity and correction coefficient table

It has no impact on the breaker feature where the altitude equals to 2000 m or below. The breaker electrical feature shall be corrected according to the following table.

Altitude (m)	2000	3000	4000	5000
Correction coefficient of operating current	1In	0.94In	0.88In	0.85In
Maximum operationnal voltage (V)	690	600	500	440
Insulation voltage (V)	1000	800	700	600
Power frequency withstand voltage (V)	2800	1500	1000	800

Plug-in and rear connection current derating table

Frame size	Rated current(A)	Plug-in derating current(A)	Note
630	500	450	
	630	520	
800	700	650	
	800	720	
1000	900	850	
	1000	920	

Note: There is no need of current derating as no specification in the table

«Электро-Профи» - www.ep.ru

Altitude derating curve

Maximum operation

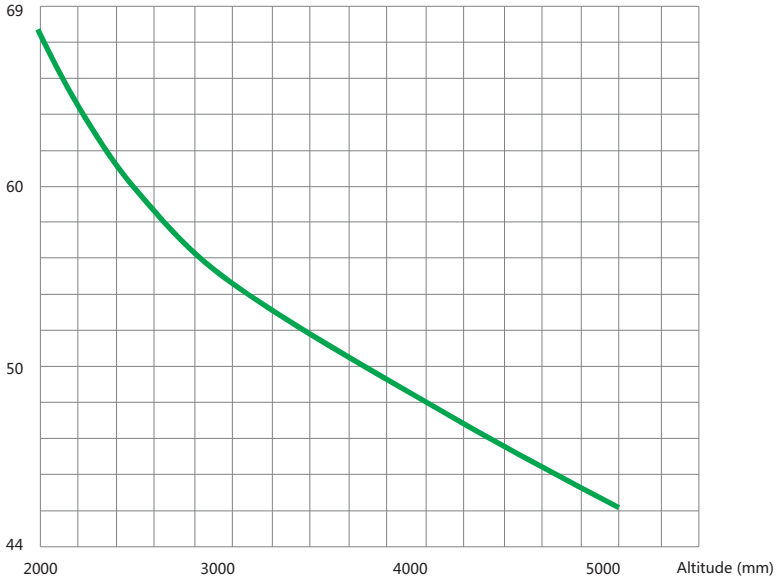

Electronic type derating coefficient table

Frame size	Rated current	Long-time delay current setting	-25℃	-20℃	-15℃	-10℃	-5℃	-0℃	Rated current	40℃	45℃	50℃	55℃	60℃	65℃	70℃
NXMS-160	32A、63A、125A、160A	I_R<0.65In	1.2I_R	1.2I_R	1.1I_R	1.1I_R	1.05I_R	1.05I_R	32A、63A、125A	1.0In			0.9In	0.85In	0.8In	0.8In
		I_R>0.65In	1.0I_R						160A	1.0In		0.9In	0.85In	0.8In	0.7In	0.7In
NXMS-250	250A	I_R<0.58In	1.15I_R	1.15I_R	1.15I_R	1.05I_R	1.05I_R	1.05I_R	250A	1.0In			0.9In	0.85In	0.8In	0.8In
		I_R>0.58In	1.0I_R													
NXMS-630	400A、630A	ALL	1.0I_R						400A	1.0In			0.9In	0.85In	0.8In	0.8In
									630A	1.0In		0.9In	0.85In	0.8In	0.7In	0.7In
NXMS-1000	800A、1000A	ALL	1.0I_R						800A	1.0In			0.9In	0.85In	0.8In	0.8In

«Электро-Профи» - www.ep.ru

M

Power loss table

Product model	Making current(A)	Single pole resistance (mΩ)	3/4pole total power loss		
			Front connection	Rear connection	Plug-in rear connection
NXM-63	63	0.75	24	27	28
NXM-125	125	0.72	28	31	32
NXM-160	160	0.4	60	87	89
NXM-250	250	0.2	63	90	90
NXM-400	400	0.15	68	72	100
NXM-630	630	0.14	180	190	200
NXM-800	800	0.08	200	230	290
NXM-1000	1000	0.06	250	280	300
NXM-1600	1600	0.027	280	–	–
NXMS-160	160	0.2	40	50	62
NXMS-250	250	0.18	50	75	86
NXMS-400	400	0.1	58	87	90
NXMS-630	630	0.08	110	120	130
NXMS-1000	1000	0.05	140	155	167
NXMS-1600	1600	0.02	250	–	–
NXMLE-160	160	0.73	60	87	89
NXMLE-250	250	0.27	63	90	90
NXMLE-400	400	0.11	68	72	100
NXMLE-630	630	0.09	180	190	200
NXHM-63	63	0.4	28	31	35
NXHM-125	125	0.6	60	87	87
NXHM-160	160	0.2	40	50	62
NXHM-250	250	0.18	50	75	86
NXHM-400	400	0.1	58	87	90
NXHM-630	630	0.08	110	120	130
NXHM-800	800	0.05	200	230	290
NXHM-1000	1000	0.02	140	155	167

Parameter table of connecting cable/copper bar

The reference section of connecting cable/copper bar with different rated current is as follows.

Rated current (A)	Section of wire (mm^2)
10	1.5
16, 20	2.5
25	4.0
32	6.0
40, 50	10
63	16
80	25
100	35
125, 140	50
160	70
180, 200, 225	95
250	120
280, 315, 320, 350	185
400	240

«Электро-Профи» - www.ep.ru

Rated current (A)	Cable		Copper bar	
	Section (mm^2)	Quantity	Width x thickness (mm)	Quantity
500	150	2	30×5	2
630	185	2	40×5	2
700, 800	240	2	50×5	2
			50×10	1
900, 1000	-	-	50×5	3
			63×10	1
1250	-	-	50×5	3
			40×10	2
1600	-	-	60×5	4
			60×10	2

The above reference section is the reference value under 40 degrees operating environmental temperature.

The recommended value of tightening torque of different housing current connecting cable/copper bar is as follows:

Rated current (A)	63A/125A	160A	250A/320A	400A/630A	800A	1000A	1250A/1600A
Torque (N m)[1]	3/6[4]	10	12	30	30	40	30
Torque (N m)[2]	3/6[4]	10	12	30	30	40	30
Torque (N m)[3]	3/6[4]	10	12	30	30	40	30

[1] Tighten the torque of busbar (or extension busbar/connection lug) in case of connecting with the body directly.
[2] Tighten the torque of connecting terminal behind the stationary breaker/tighten the torque of connecting terminal of plug in breaker.
[3] Tighten the torque of extension busbar of terminal on the plug-in pedestal.
[4] Value of torque is 3 for 10A~63A of frame current 63 and 125A breaker, value of torque is 6 for 70A~125A for frame current 125A breaker.

«Электро-Профи» - www.ep.ru

M

NXM- 63E/S/F/H, 125E/S/F/H, NXHM- 63, 125

Front connection, dimension (mm)

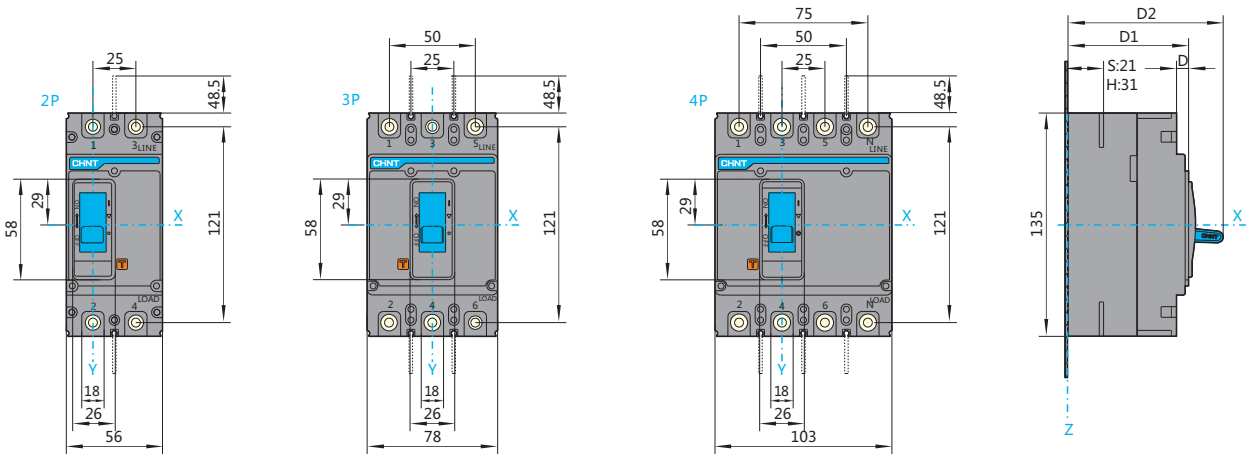

NXMLE-125S/F/H

Front connection, dimension (mm)

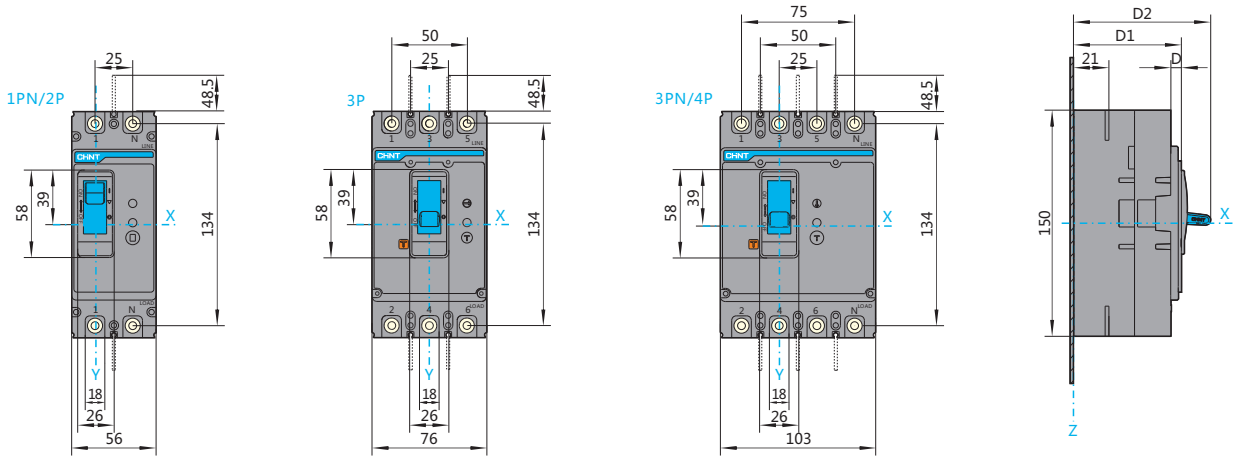

NXM-63E/F/S/H, 125E/F/S/H, NXHM-63,125,NXMLE-125F/S/H

Installation size of baseplate

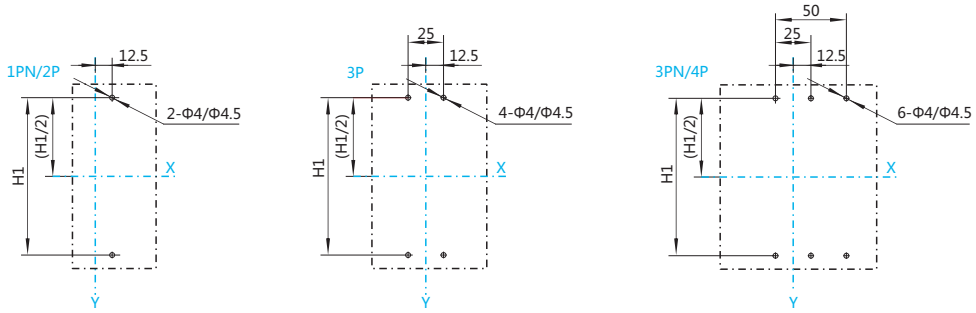

NXM: Φ4;
NXHM: Φ4.5

Specification and model	D1	D2	D	H1			Remark
				1PN/2P	3P	3PN/4P	
NXM-63E/S、125E/S	71	90	7	117	117	117	2P/3P/4P
NXM-63F/H、125F/H	81	100	7	-	117	117	3P/4P
NXMLE-125S	71	90	7	138	138	138	1PN/2P/3P/3PN/4P
NXMLE-125F/H	81	100	7	-	138	138	3P/3PN/4P
NXHM-63、125	71	90	7	-	117	117	3P/4P

«Электро-Профи» - www.ep.ru

NXM-63E/S/F/H, 125E/S/F/H, NXMLE-125S/F/H, NXHM-63, 125

Rear connection (mm)

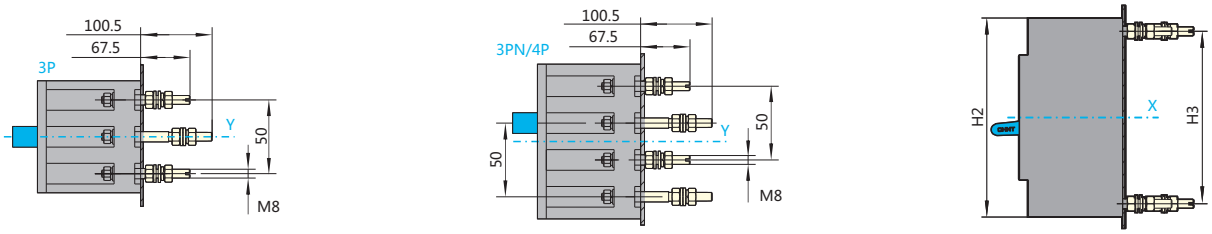

NXM-63E/S/F/H, 125E/S/F/H, NXMLE-125S/F/H, NXHM-63, 125

Rear connection (mm)

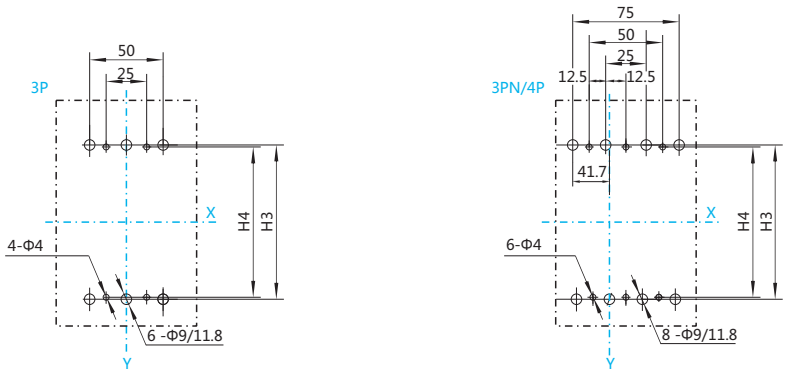

Specification and model	H2	H3	H4	Remark
NXM-63E/S/F/H, 125E/S/F/H	135	121	117	3P/4P
NXMLE-125S/F/H	156	142	138	3P/3PN/4P
NXHM-63, 125	135	121	117	3P/4P

NXM-63E/S/F/H, 125E/S/F/H, NXMLE-125S/F/H, NXHM-63, 125

Plug-in rear connection (mm)

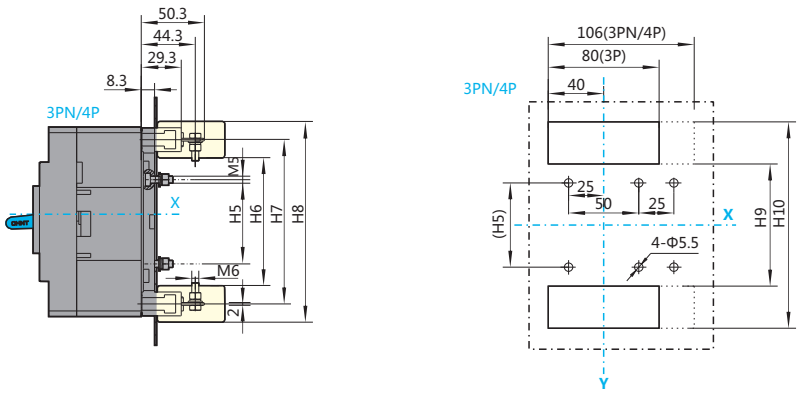

Specification and model	H5	H6	H7	H8	H9	H10	Remark
NXM-63E/S/F/H、125E/S/F/H	60	75	121	159	92	144	3P/4P
NXMLE-125S/F/H	60	98	142	183	112	165	3P/3PN/4P
NXHM-63、125	60	75	121	159	92	144	3P/4P

«Электро-Профи» - www.ep.ru

M

NXM-63E/S/F/H, 125E/S/F/H, NXMLE-125S/F/H, NXHM-63, 125

Cabinet gate hole (small) size (mm)

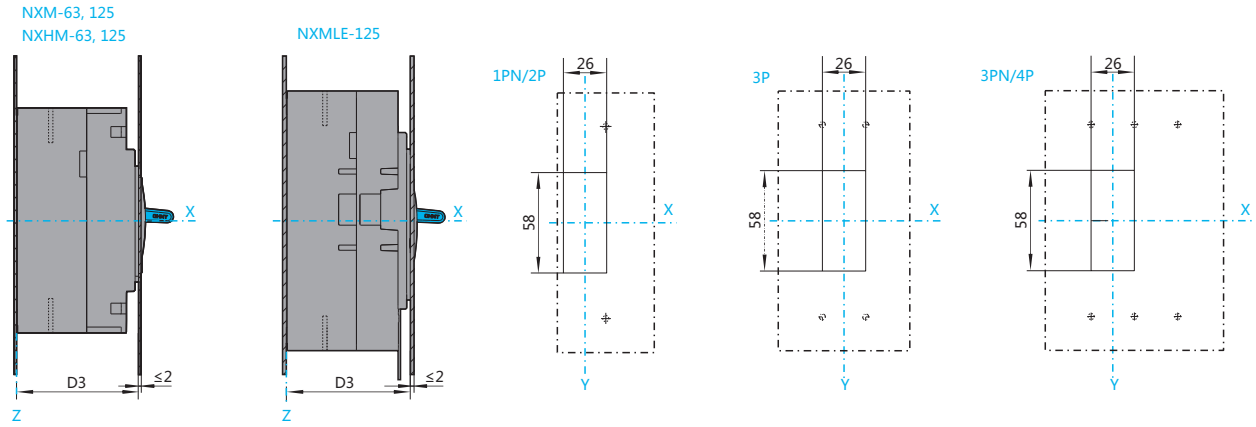

NXM-63E/S/F/H, 125E/S/F/H, NXMLE-125S/F/H, NXHM-63, 125

Cabinet gate hole (large) size (mm)

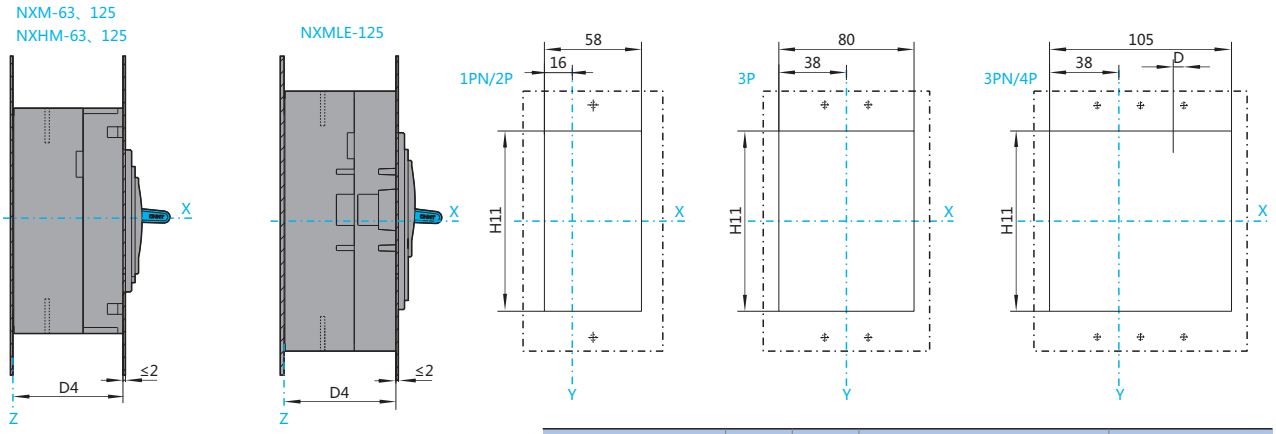

Specification and model	D3	D4	H11			Remark
			1PN/2P	3P	3PN/4P	
NXM-63E/S, 125E/S	71	64	87.5	87.5	87.5	2P/3P/4P
NXM-63F/H, 125F/H	81	74	-	87.5	87.5	3P/4P
NXMLE-125S	71	64	110	110	110	1PN/2P/3P/3PN/4P
NXMLE-125F/H	81	74	-	110	110	3P/3PN/4P
NXHM-63, 125	71	64	-	87.5	87.5	3P/4P

NXM-160E/S/F/H, NXHM-160

Rear connection, dimension (mm)

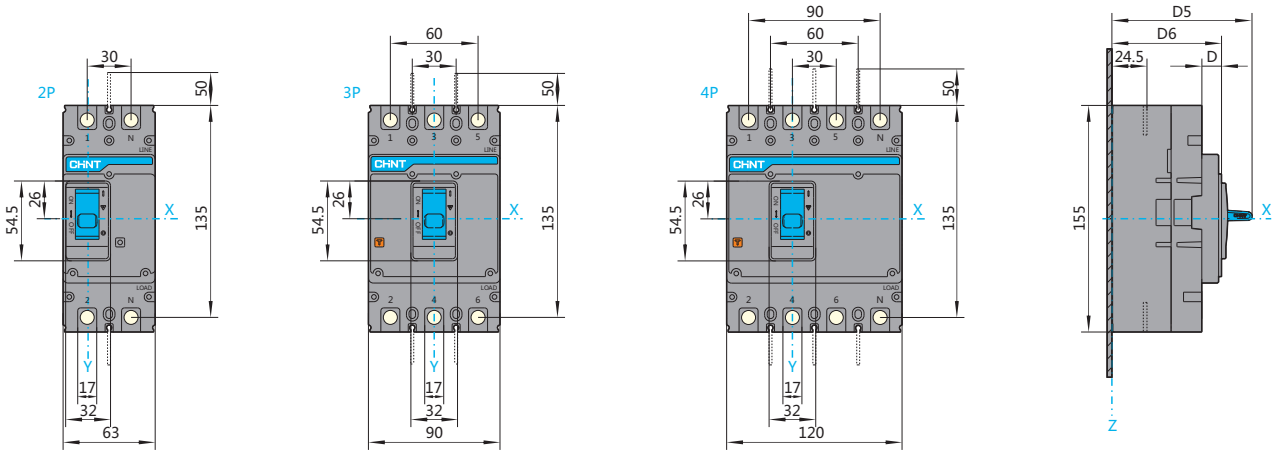

NXMS-160F/H

Front connection, dimension (mm)

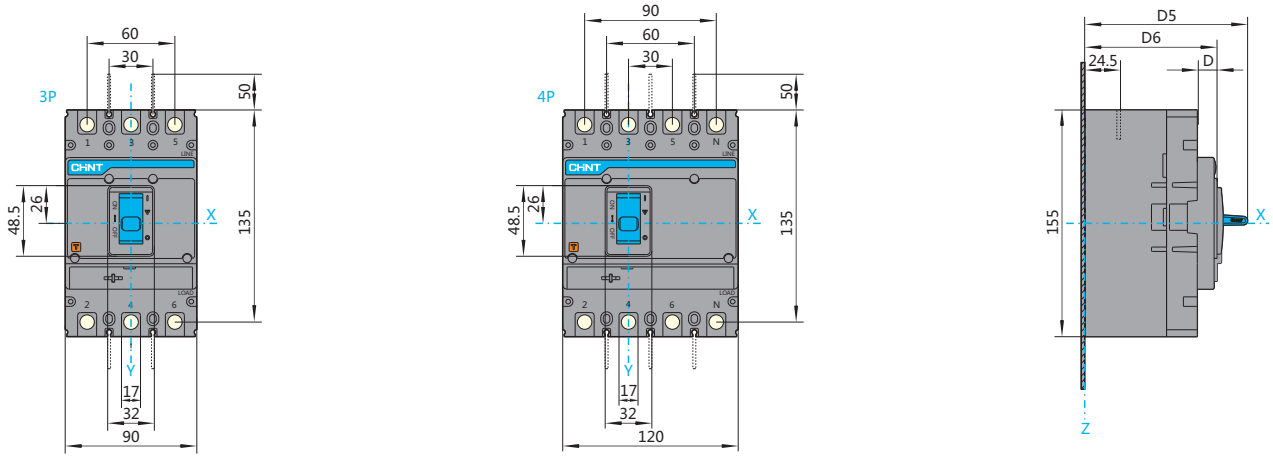

NXMLE-160S/F/H

Front connection, dimension (mm)

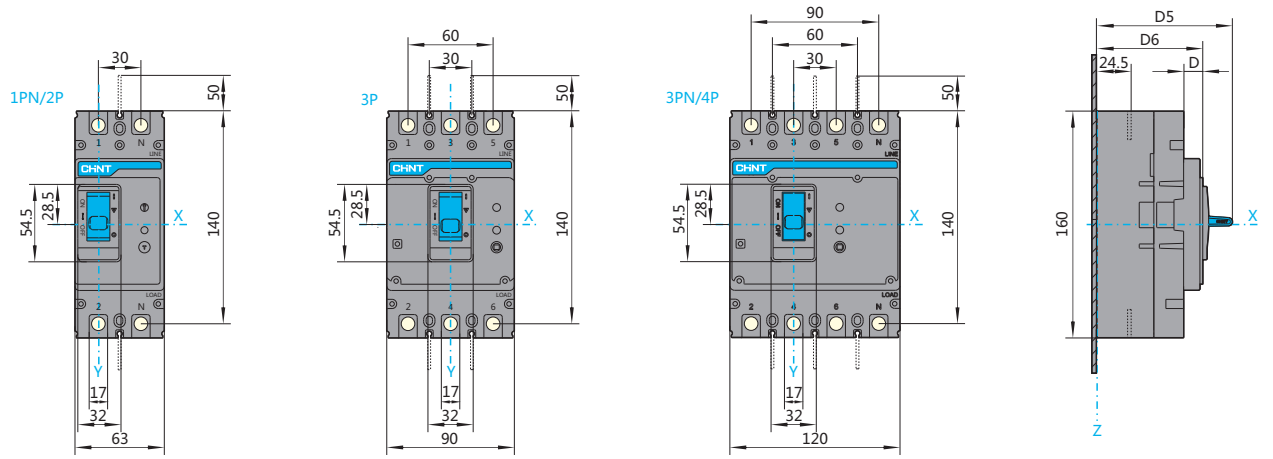

NXM-160E/S/F/H, NXMS-160F/H, NXMLE-160S/F/H, NXHM-160

Installation size of baseplate (mm)

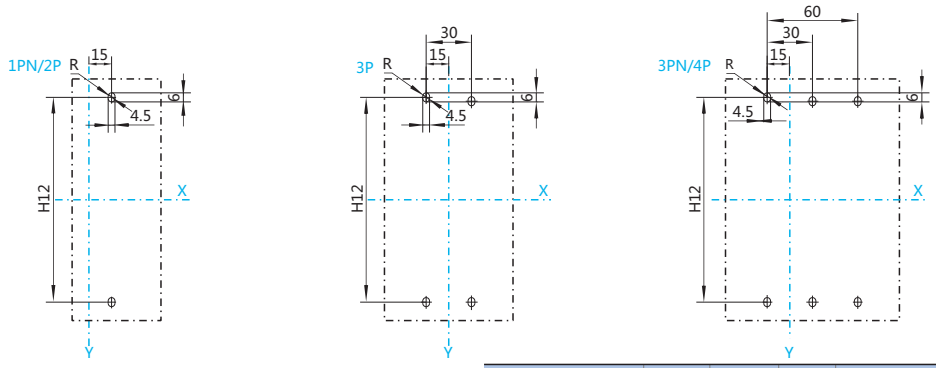

Specification and model	D6	D5	D	H12			Remark
				1PN/2P	3P	3PN/4P	
NXM-160E/S	75.5	96.5	13.5	130.5	130.5	130.5	2P/3P/4P
NXM-160F/H	91	112	13.5	-	130.5	130.5	3P/4P
NXMS-160F/H	91	112	13.5	130.5	130.5	130.5	3P/4P
NXMLE-160S	75.5	96	13.5	-	135.5	135.5	1PN/2P/3P/3PN/4P
NXMLE-160F/H	91	112	13.5	-	135.5	135.5	3P/3PN/4P
NXHM-160	75.5	96.5	13.5	-	130.5	130.5	3P/4P

«Электро-Профи» - www.ep.ru

M

NXM-160E/S/F/H, NXMS-160F/H, NXMLE-160S/F/H, NXHM-160

Rear connection, dimension (mm)

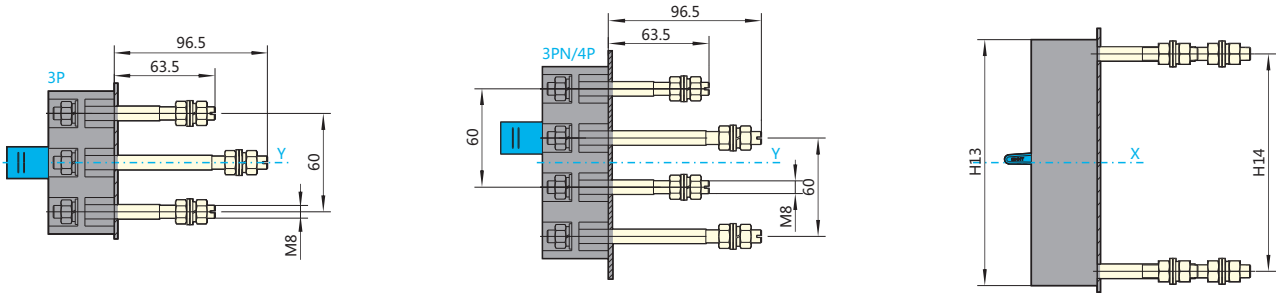

NXM-160E/S/F/H, NXMS-160F/H, NXMLE-160S/F/H, NXHM-160

Plug-in rear connection, dimension (mm)

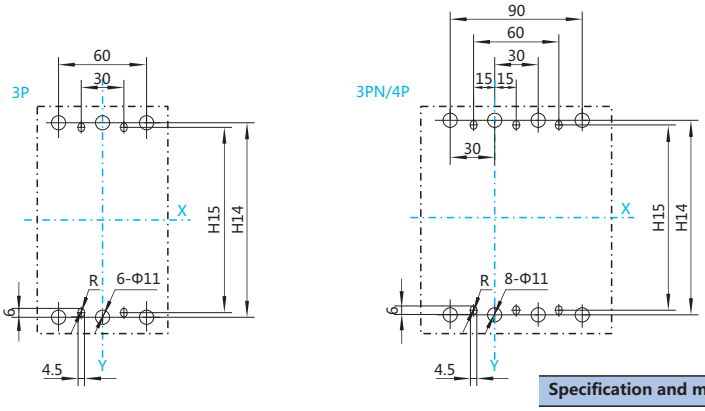

Specification and model	H13	H14	H15	Remark
NXM-160E/S/F/H	155	136	130.5	3P/4P
NXMS-160F/H	155	136	130.5	3P/4P
NXMLE-160S/F/H	160	140	135.5	3P/3PN/4P
NXHM-160	155	135	130.5	3P/4P

NXM-160E/S/F/H, NXMS-160F/H, NXMLE-160S/F/H, NXHM-160

Plug-in back-panel wiring, outline and installation size (mm)

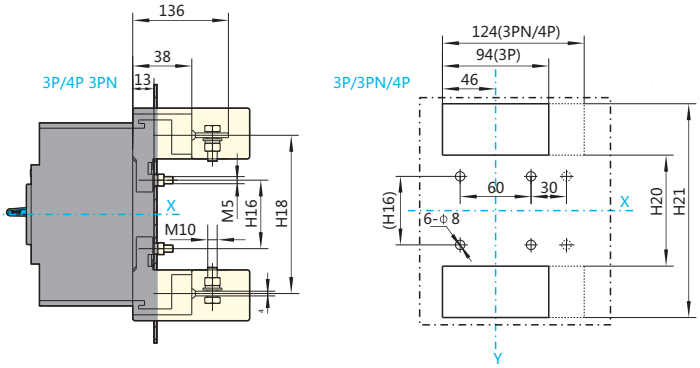

Specification and model	H16	H18	H20	H21	Remark
NXM-160E/S/F/H	72	135	106	167	3P/4P
NXMS-160F/H	72	135	106	167	3P/4P
NXMLE-160S/F/H	77	140	111	172	3P/3PN/4P
NXHM-160	72	135	106	167	3P/4P

«Электро-Профи» - www.ep.ru

NXM-160E/S/F/H, NXMS-160F/H, NXMLE-160S/F/H, NXHM-160

Cabinet gate hole (small) size (mm)

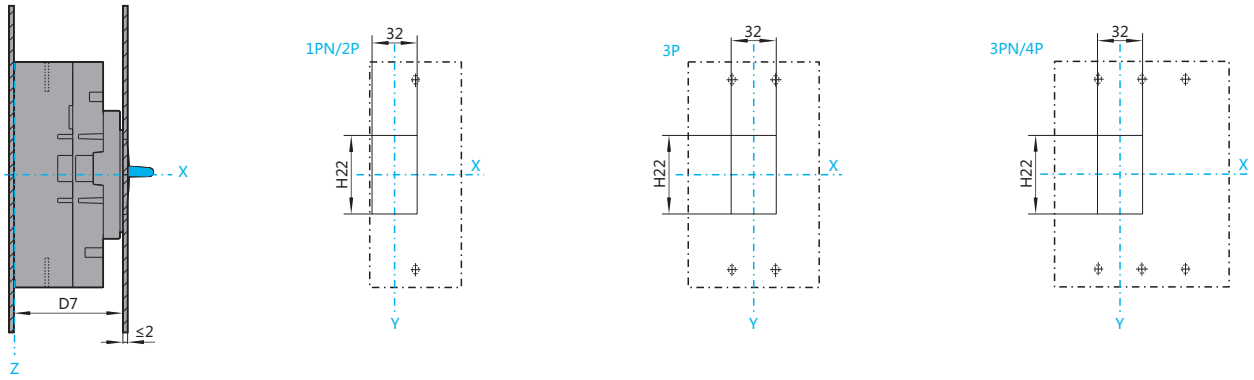

NXM-160E/S/F/H, NXMS-160F/H, NXMLE-160S/F/H, NXHM-160

Cabinet gate hole (large) size (mm)

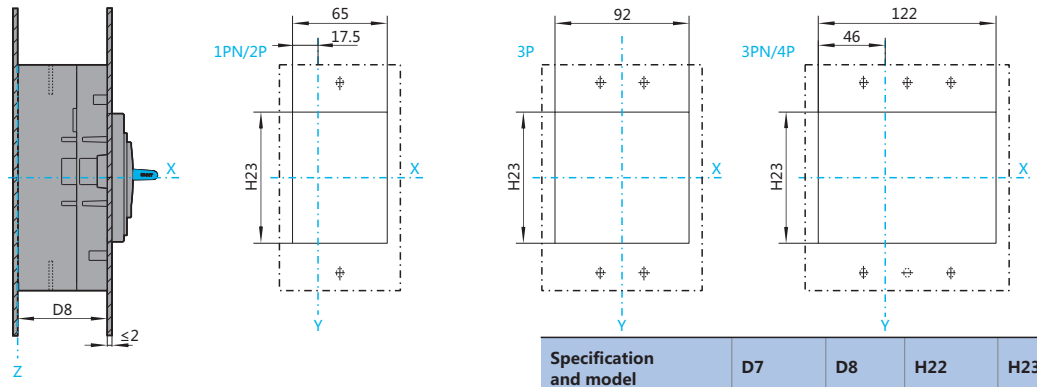

Specification and model	D7	D8	H22	H23	Remark
NXM-160E/S	75.5	62	54.5	90	2P/3P/4P
NXM-160F/H	91	77.5	54.5	90	3P/4P
NXMS-160F/H	91	77.5	48.5	92	3P/4P
NXMLE-160S	75.5	62	54.5	95	1PN/2P/3P/3PN/4P
NXMLE-160F/H	91	77.5	54.5	95	3P/3PN/4P
NXHM-160	75.5	62	54.5	90	3P/4P

NXM-250E/S/F/H, NXHM-250

Front connection, dimension (mm)

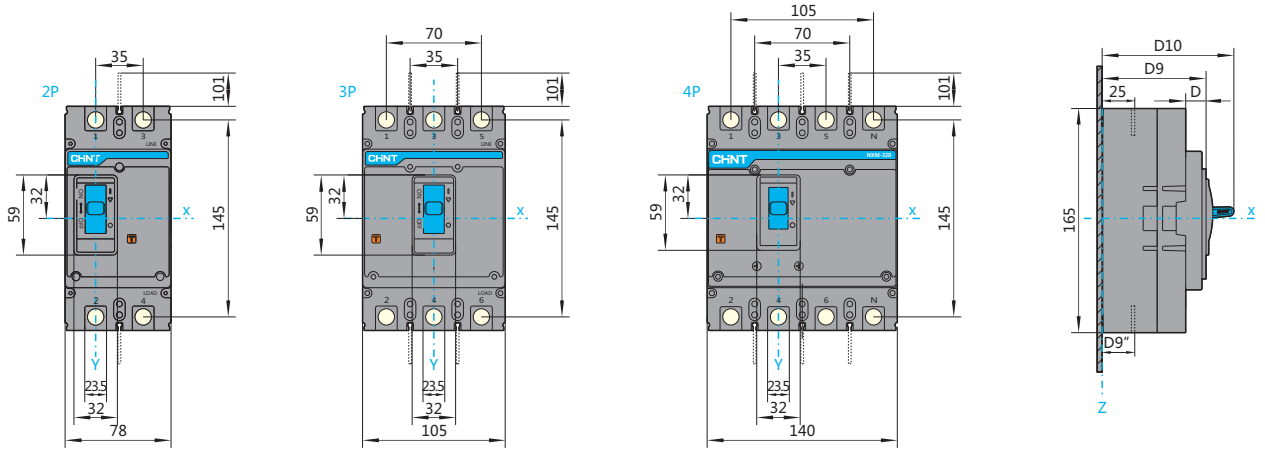

M

NXMS-250F/H

Front connection, dimension (mm)

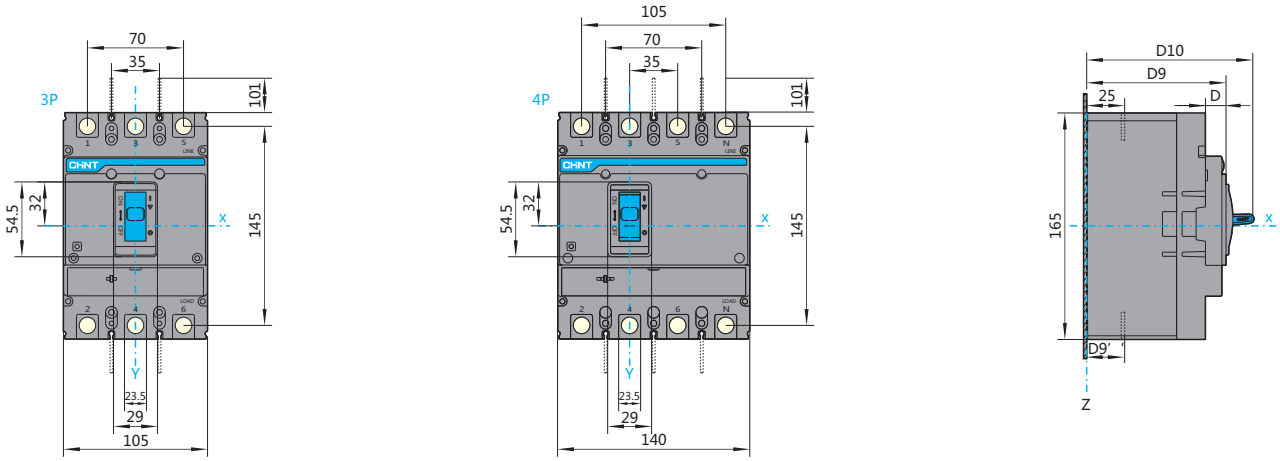

NXMLE-250S/F/H

Front connection, dimension (mm)

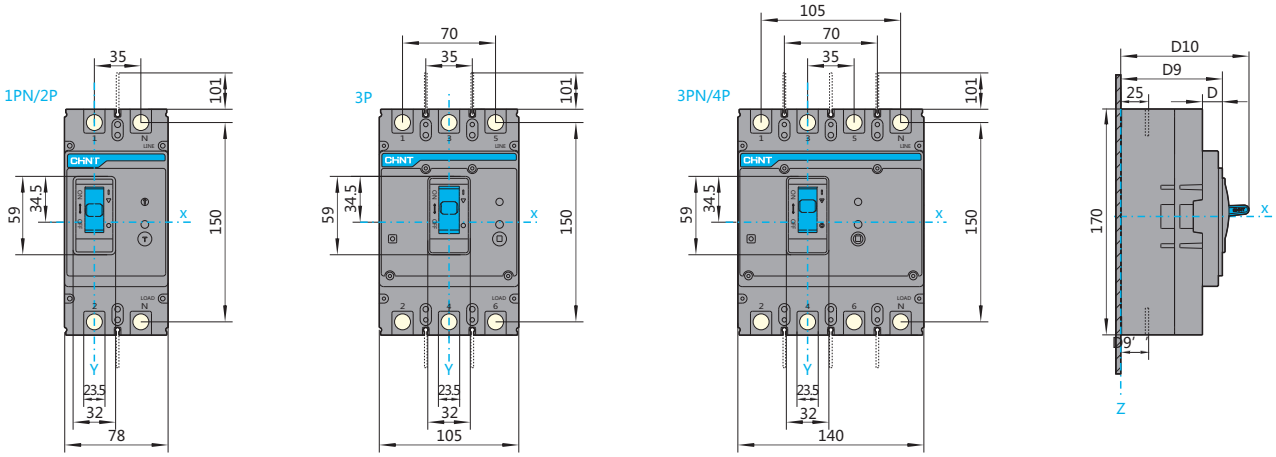

NXM-250E/S/F/H, NXMS-250F/H,NXMLE-250S/F/H, NXHM-250, 320

Front-panel wiring, installation size (mm)

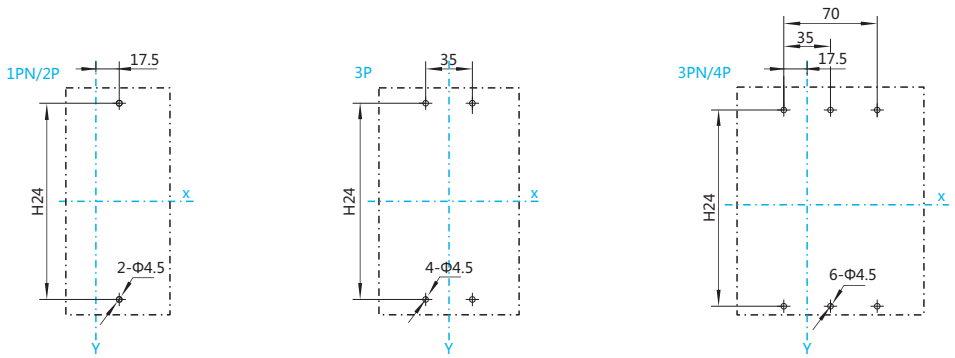

Specification and model	D9	D9''			D10	D	H24			Remark	
		125/160A	180/200A	225/250A			1PN/2P	3P	3PN/4P		
NXM-250E/S	77	23.5	23.5	23.5	98	15	126	126	126	2P/3P/4P	98
NXM-250F/H	102	23.5	24	25	123	15	-	126	126	3P/4P	123
NXMS-250F/H	102	25			123	15	-	126	126	3P/4P	123
NXMLE-250S	77	25			99	15	131	131	131	1PN/2P/3PN/4P	98
NXMLE-250F/H	80	28			102	15	-	131	131	3P/3PN/4P	101
NXHM-250, 320	77	25			98	15	-	126	126	3P/4P	122

«Электро-Профи» - www.ep.ru

NXM-250E/S/F/H, NXMS-250F/H, NXMLE-250S/F/H, NXHM-250, 320

Installation size of baseplate (mm)

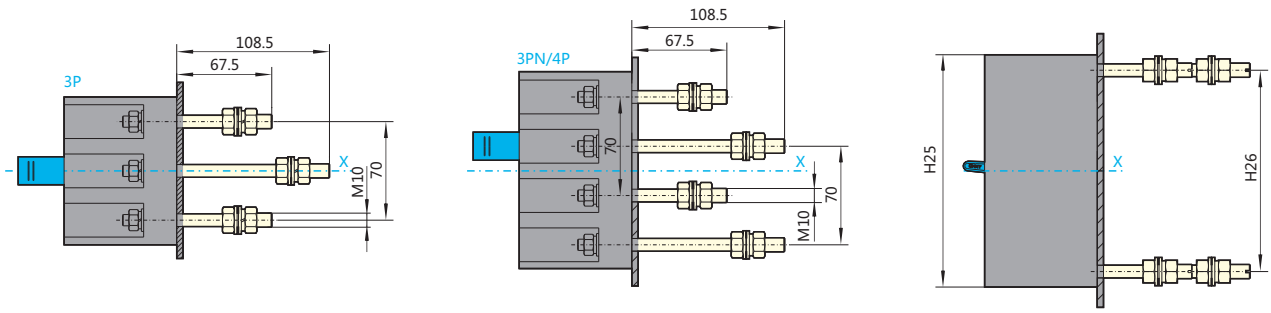

NXM-250E/S/F/H, NXMS-250F/H, NXMLE-250S/F/H, NXHM-250, 320

Installation size of baseplate (mm)

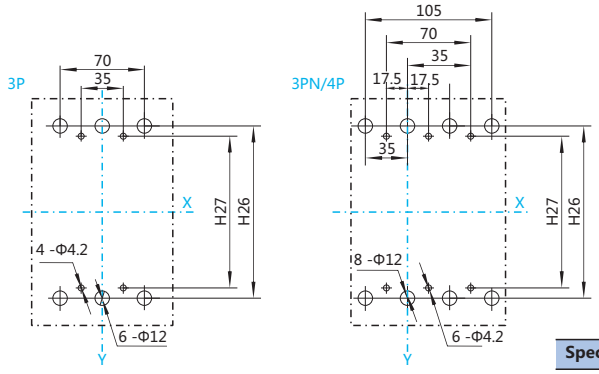

Specification and model	H25	H26	H27	Remark
NXM-250E/S/F/H	165	145	126	3P/4P
NXMS-250F/H	165	145	126	3P/4P
NXMLE-250S/F/H	170	150	131	3P/3PN/4P
NXHM-250, 320	165	145	126	3P/4P

NXM-250E/S/F/H, NXMS-250F/H, NXMLE-250S/F/H, NXHM-250, 320

Plug-in rear connection, dimension (mm)

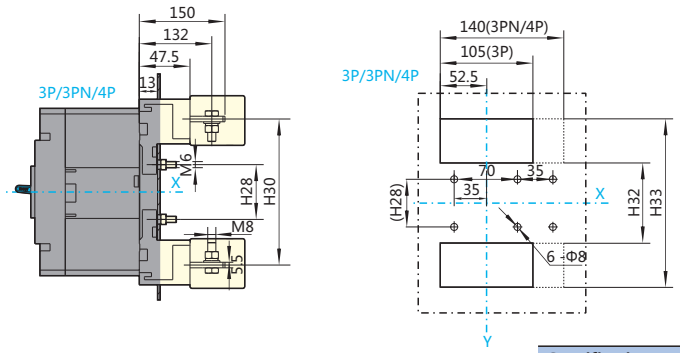

Specification and model	H28	H30	H32	H33	Remark
NXM-250E/S/F/H	74	145	108	180	3P/4P
NXMS-250F/H	74	145	108	180	3P/4P
NXMLE-250S/F/H	79	144	113	185	3P/3PN/4P
NXHM-250, 320	74	139	108	180	3P/4P

«Электро-Профи» - www.ep.ru

M

NXM-250E/S/F/H, NXMS-250F/H, NXMLE-250S/F/H, NXHM-250, 320

Cabinet gate hole (small) size (mm)

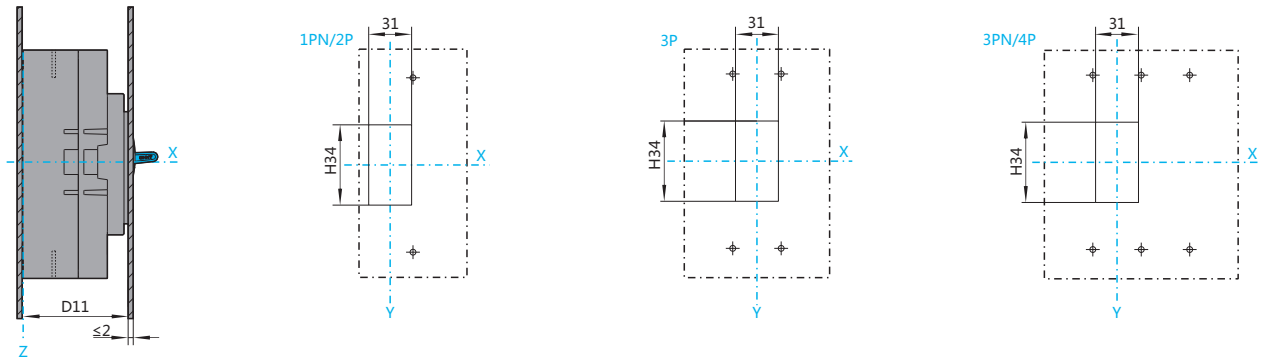

NXM-250E/S/F/H, NXMS-250F/H, NXMLE-250S/F/H, NXHM-250, 320

Cabinet gate hole (large) size (mm)

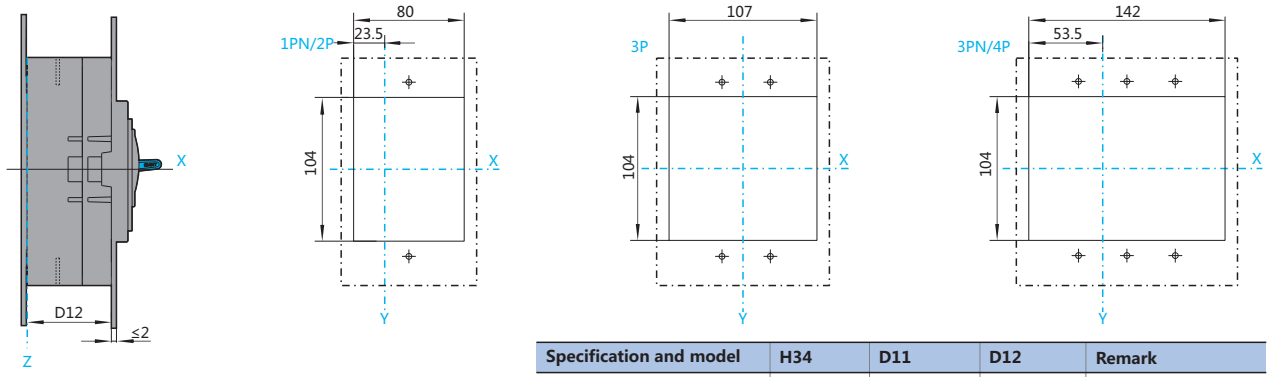

Specification and model	H34	D11	D12	Remark
NXM-250E/S	59	76.5	61.5	2P/3P/4P
NXM-250F/H	59	101.5	86.5	3P/4P
NXMS-250F/H	54.5	101.5	86.5	3P/4P
NXMLE-250S	59	76.5	61.5	1PN/2P/3P/3PN/4P
NXMLE-250F/H	59	79.5	64.5	3P/3PN/4P
NXHM-250, 320	59	76.5	61.5	3P/4P

NXM-400E/S/F/H, 630E/S/F/H, NXHM-400, 630

Front connection, dimension (mm)

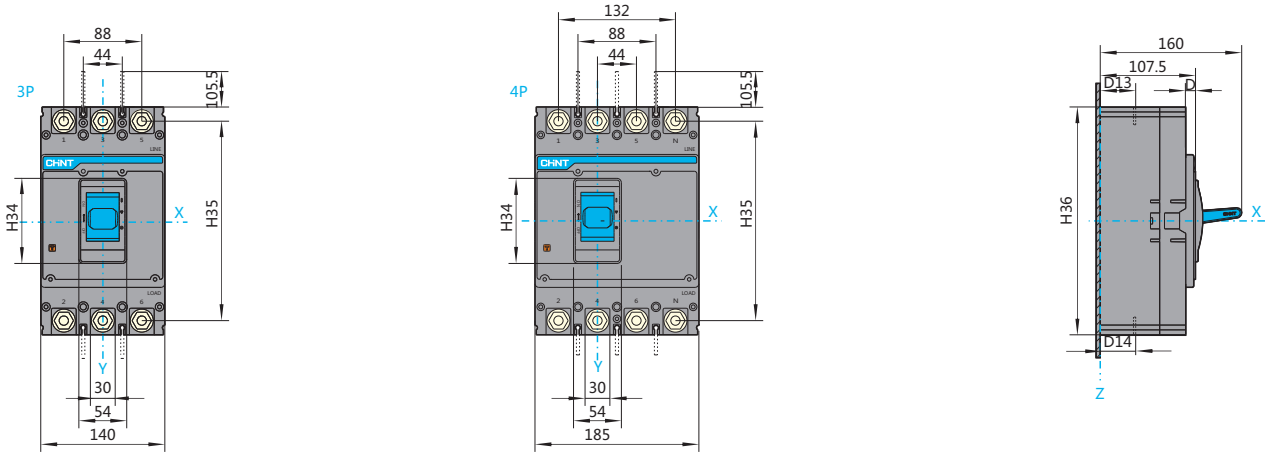

NXMS-400S/F/H, 630S/F/H

Front connection, dimension (mm)

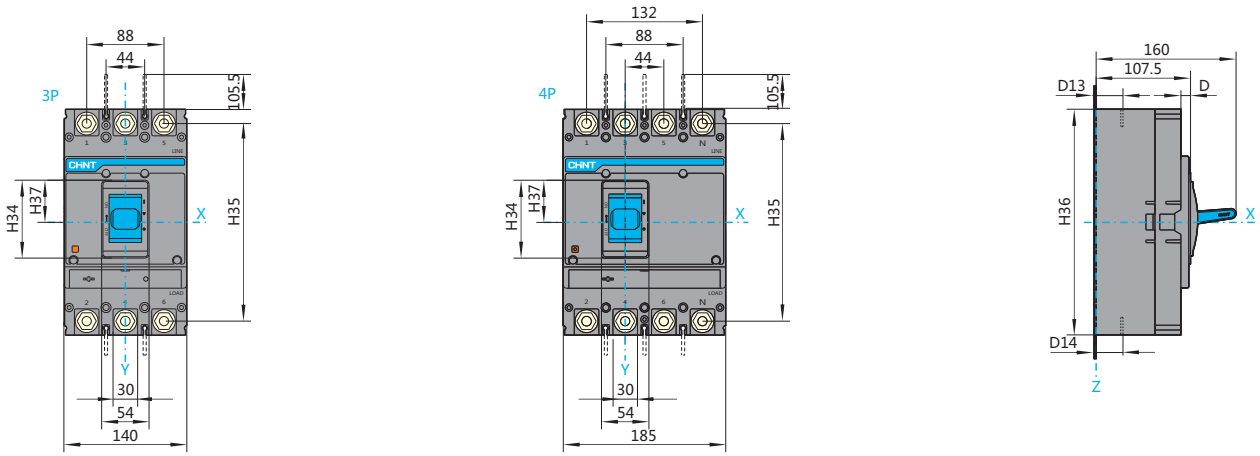

NXMLE-400S/F/H, 630S/F/H

Front connection, dimension (mm)

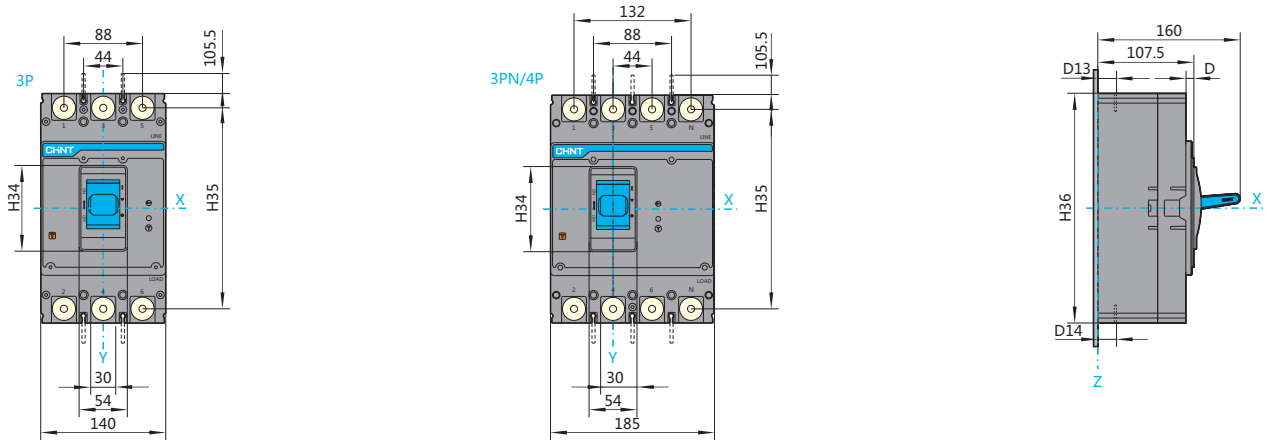

NXM-400E/S/F/H, 630E/S/F/H, NXMS-400E/F/H, 630E/F/H, NXMLE-400S/F/H, 630S/F/H, NXHM-400, 630

Installation size of baseplate (mm)

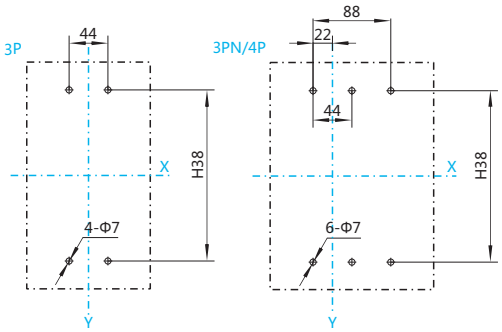

Specification and model	H34	H35	H36	H37	H38	D13	D14	D	Remark
NXM-400E/S/F/H NXM-630E/S/F/H	96	225	257	48	194	39	37	11	250A-280A
						40	36.8		300A-315A-320A
							37		350A-380A
							37.5		400A-450A
						41	38.5		500A-550A
							40		600A-630A
NXMS-400S/F/H NXMS-630S/F/H	89	225	257	48	194	40	37.5	11	400A
						41	41		630A
NXMLE-400S/F/H NXMLE-630S/F/H	96	235	267	53	228	39	38	11	250A-280A
						40	36.8		300A-315A-320A
							37		350A-380A
							38		400A-450A
						41	39		500A-550A
							40		600A-630A
NXHM-400 NXHM-630	96	225	257	48	194	40	37.5	11	400A
						41	40		630A

«Электро-Профи» - www.ep.ru

M

NXM-400E/S/F/H, 630E/S/F/H, NXMS-400E/F/H, 630E/F/H, NXMLE-400S/F/H, 630S/F/H, NXHM-400, 630

Rear connection, dimension (mm)

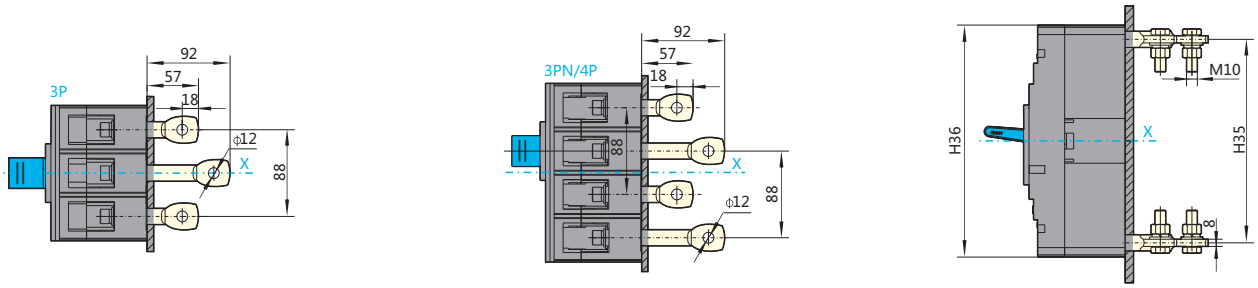

NXM-400E/S/F/H, 630E/S/F/H, NXMS-400E/F/H, 630E/F/H, NXMLE-400S/F/H, 630S/F/H, NXHM-400, 630

Installation size of baseplate (mm)

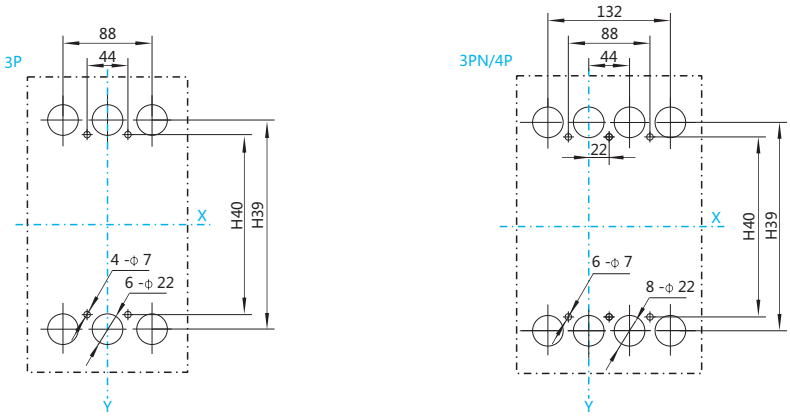

Specification and model	H39	H40	Remark
NXM-400E/S/F/H , 630E/S/F/H	225	194	3P/4P
NXMS-400S/F/H , 630S/F/H	225	194	3P/4P
NXMLE-400S/F/H	235	228	3P/3PN/4P
NXMLE-630S/F/H	235	228	3P/3PN/4P
NXHM-400 , 630	225	194	3P/4P

NXM- 400E/S/F/H, 630E/S/F/H, NXMS-400E/F/H, 630E/F/H, NXMLE-400S/F/H, 630S/F/H, NXHM-400, 630

Plug-in rear connection, dimension (mm)

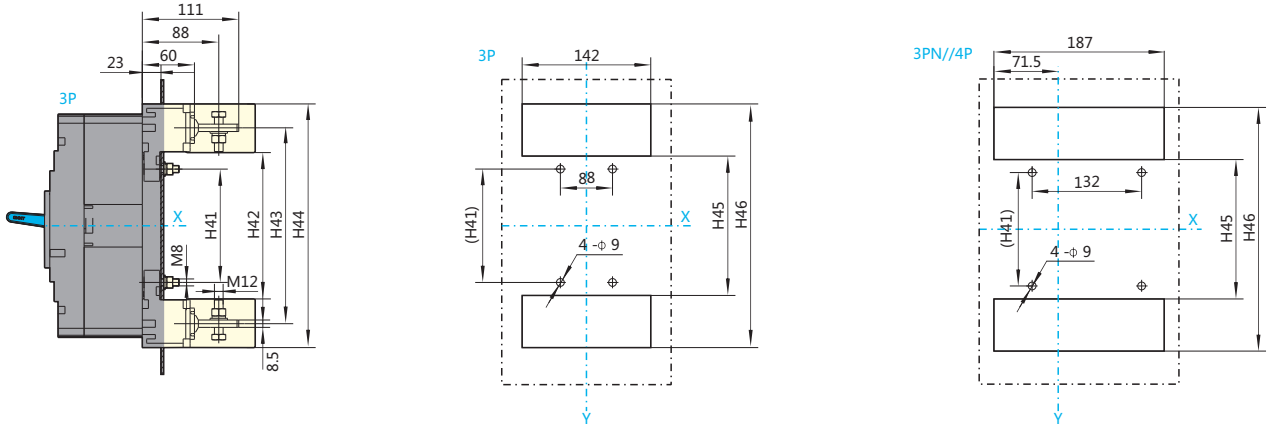

Specification and model	H41	H42	H43	H44	H45	H46	Remark
NXM-400E/S/F/H, 630E/S/F/H	145	171	225	281	168	283	3P/4P
NXMS-400S/F/H, 630S/F/H	145	171	225	281	168	283	3P/4P
NXMLE-400S/F/H	155	181	235	291	178	293	3P/3PN/4P
NXMLE-630S/F/H	155	181	235	291	178	293	3P/3PN/4P
NXHM-400, 630	145	171	225	281	168	283	3P/4P

«Электро-Профи» - www.ep.ru

NXM-400E/S/F/H, 630E/S/F/H, NXMS-400E/F/H, 630E/F/H, NXMLE-400S/F/H, 630S/F/H, NXHM-400, 630

Cabinet gate hole (small) size (mm)

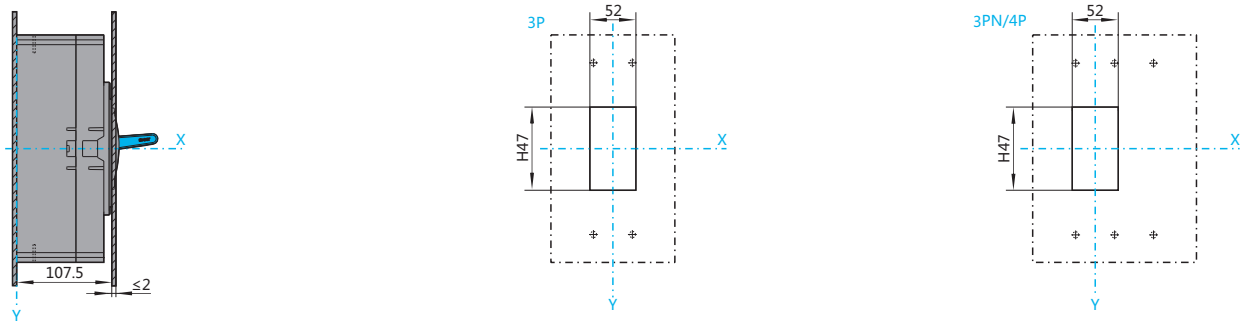

NXM-400E/S/F/H, 630E/S/F/H, NXMS-400E/F/H, 630E/F/H, NXMLE-400S/F/H, 630S/F/H, NXHM-400, 630

Cabinet gate hole (large) size (mm)

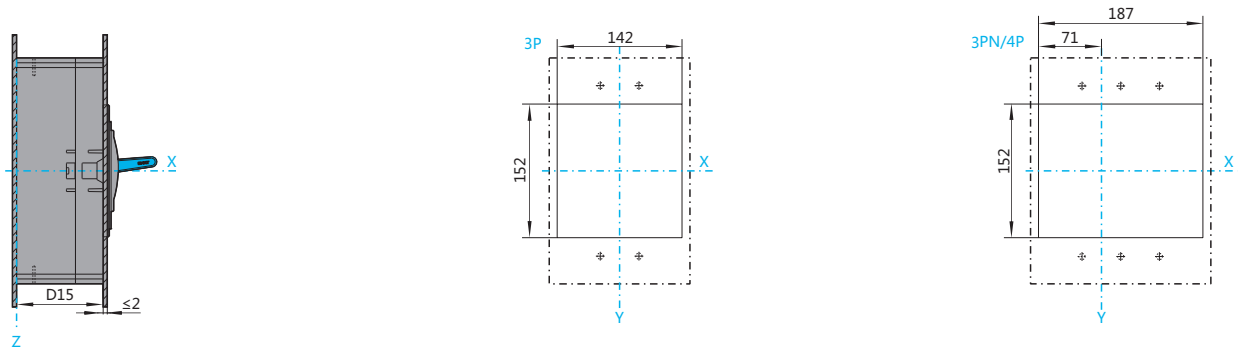

Specification and model	H47	D15	Remark
NXM-400E/S/F/H, 630E/S/F/H	94	96.5	3P/4P
NXMS-400S/F/H, 630S/F/H	87	96.5	3P/4P
NXMLE-400S/F/H, 630S/F/H	94	98.5	3P/3PN/4P
NXHM-400, 630	94	96.5	3P/4P

NXM-800S/F/H, NXHM-800

Front connection, dimension (mm)

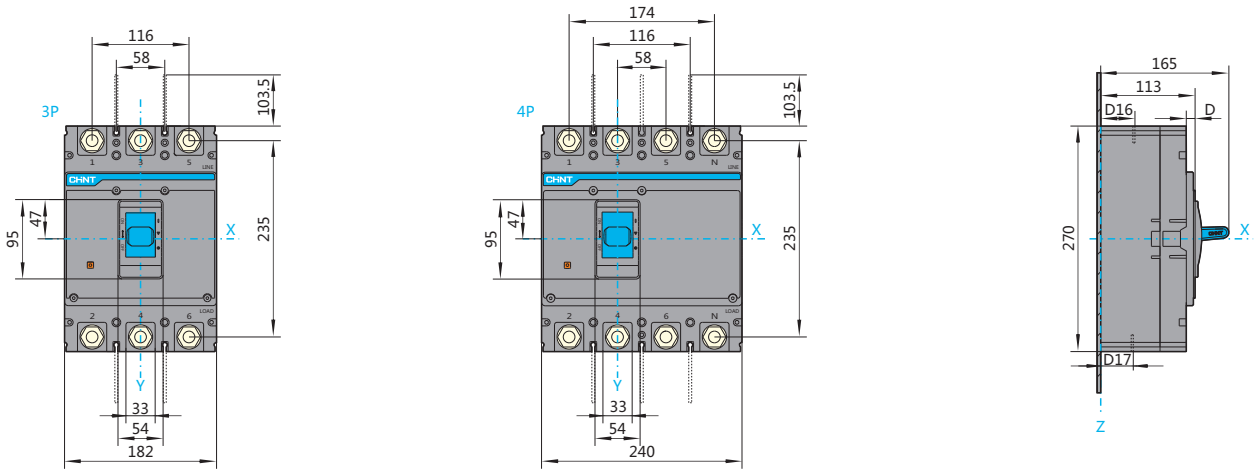

«Электро-Профи» - www.ep.ru

M

NXM-800S/F/H, NXHM-800

Installation size of baseplate(mm)

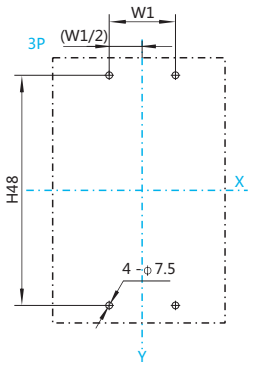

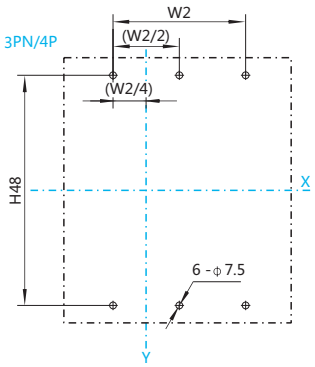

Specification and model	D16	D17	D	H48	W1	W2	Remark
NXM-800S/F/H NXHM-800	43	41	10.5	200	58	116	630A
	44	42	10.5	200	58	116	700A
	45	43	10.5	200	58	116	800A

NXM-800S/F/H, NXHM-800

Rear connection, dimension (mm)

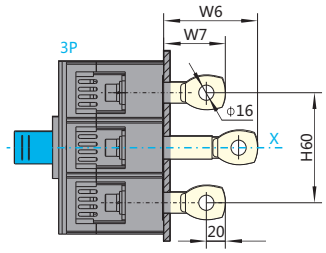

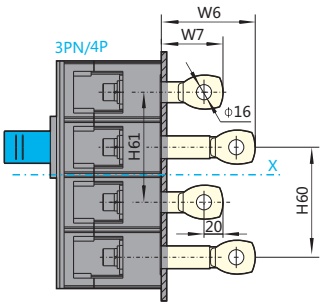

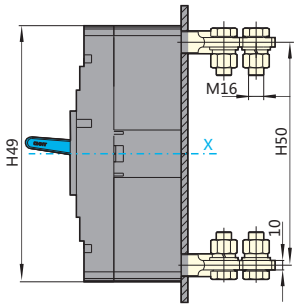

«Электро-Профи» - www.ep.ru

NXM-800S/F/H, NXHM-800

Rear connection, dimension(mm)

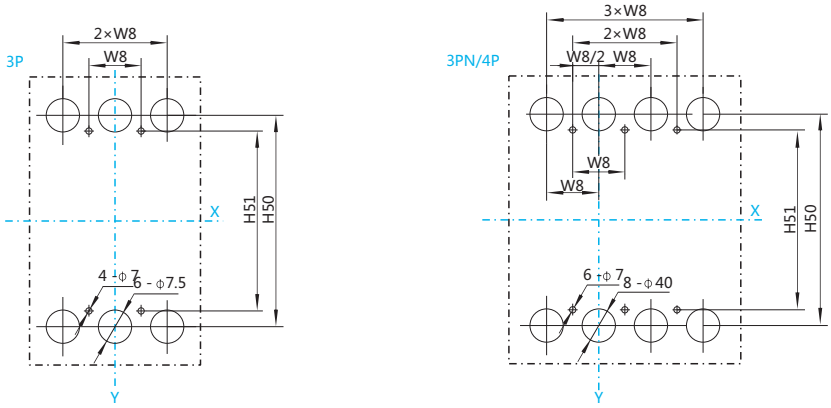

Specification and model	W6	W7	W8	H49	H50	H51	H60
NXM-800S/F/H	99	67	58	270	235	200	116
NXHM-800	99	67	58	270	235	200	116

NXM-800S/F/H, NXHM-800

Plug-in rear connection, dimension (mm)

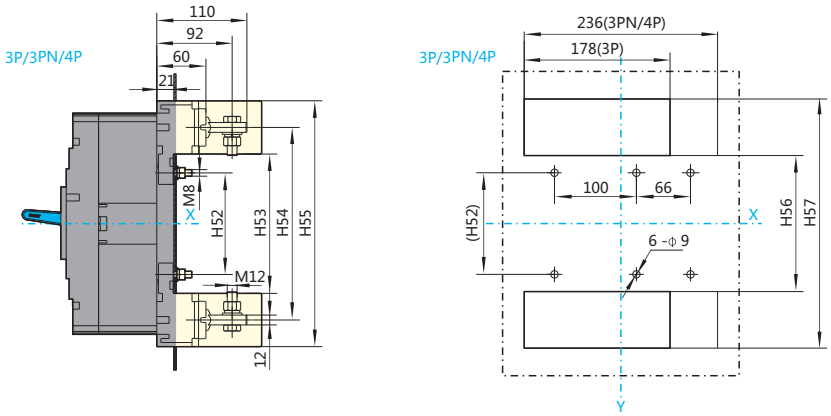

Specification and model	H52	H53	H54	H55	H56	H57	Remark
NXM-800S/F/H	124	170	235	300	168	302	3P/4P
NXHM-800	124	170	235	300	168	302	3P/4P

NXM-800S/F/H, NXHM-800

Cabinet gate hole (small) size (mm)

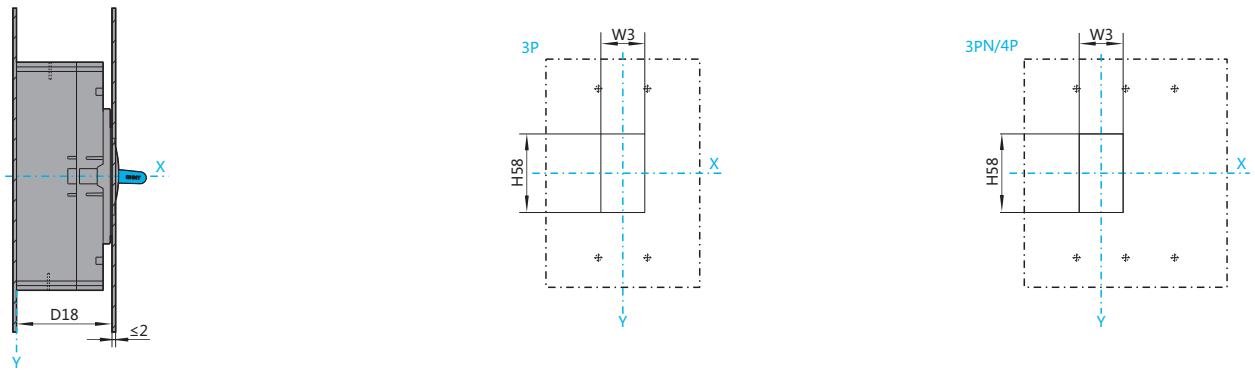

M

NXM-800S/F/H, NXHM-800

Cabinet gate hole (large) size (mm)

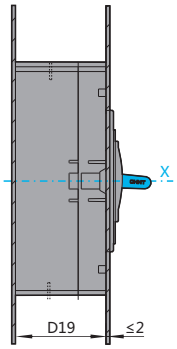

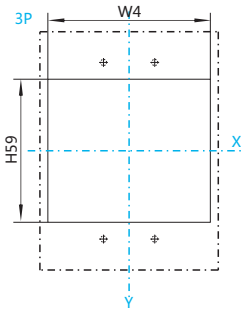

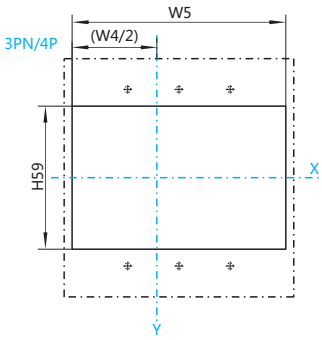

Specification and model	D18	D19	H58	W3	H59	W4	W5	Remark
NXM-800S/F/H	113	102.5	95	54	162	184	242	3P/4P
NXHM-800	113	102.5	95	54	162	184	242	3P/4P

NXM-1000S/H, NXHM-1000

Front connection, dimension (mm)

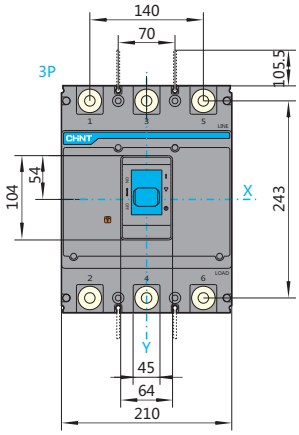

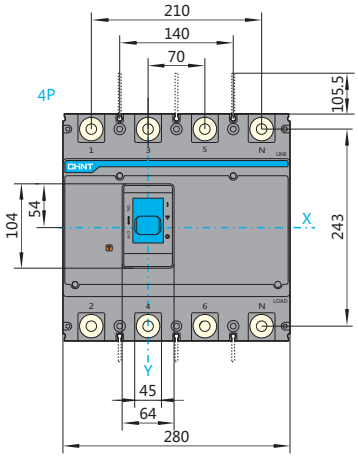

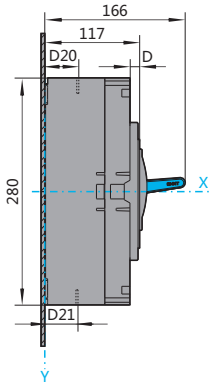

NXMS-1000S/H

Front connection, dimension (mm)

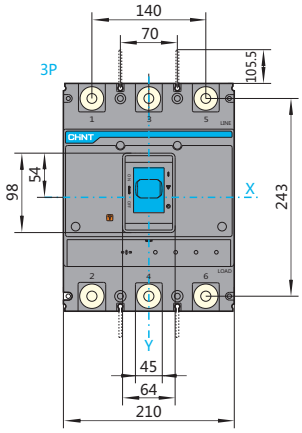

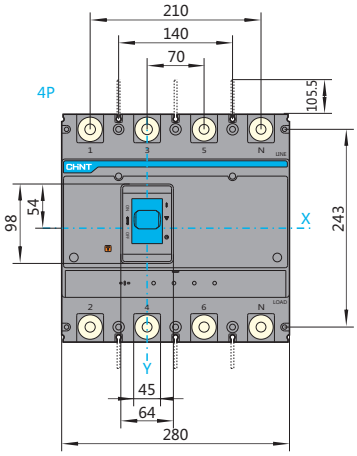

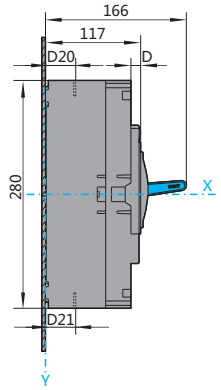

«Электро-Профи» - www.ep.ru

NXM-1000S/H, NXMS-1000S/H, NXHM-1000

Installation size of baseplate (mm)

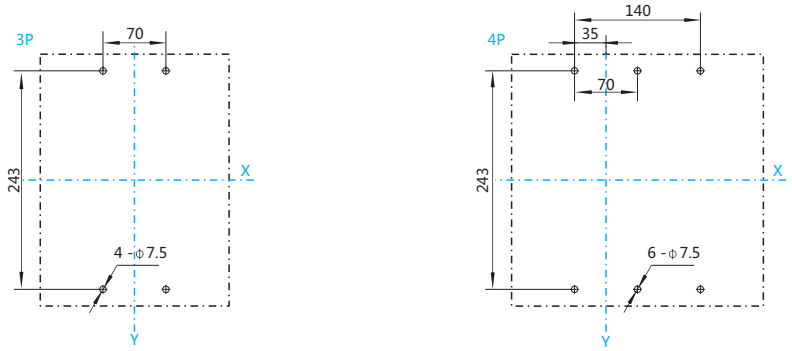

Specification and model	D20	D21	D	Remark
NXM-1000S/H	41	41	12	800A
NXHM-1000	43	42	12	1000A
NXMS-1000S/H	43	43	12	800/1000A

NXM-1000S/H, NXMS-1000S/H, NXHM-1000

Rear connection, dimension (mm)

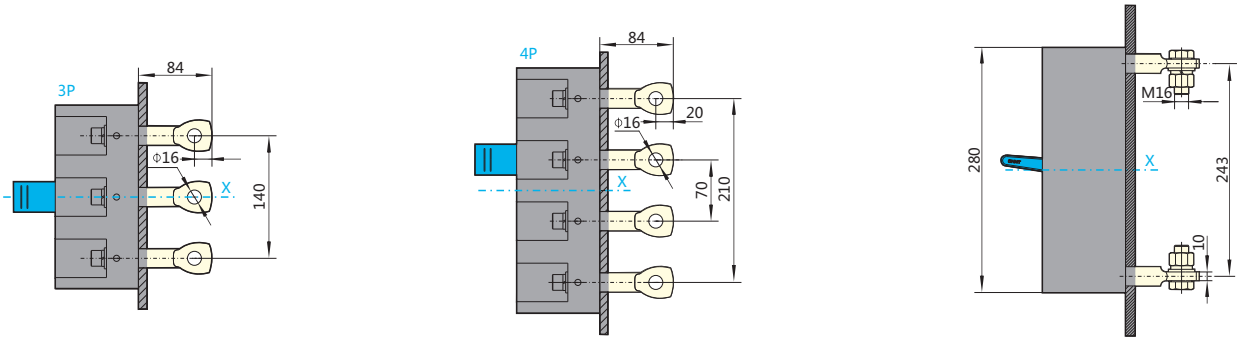

NXM-1000S/H, NXMS-1000S/H, NXHM-1000

Rear connection, dimension (mm)

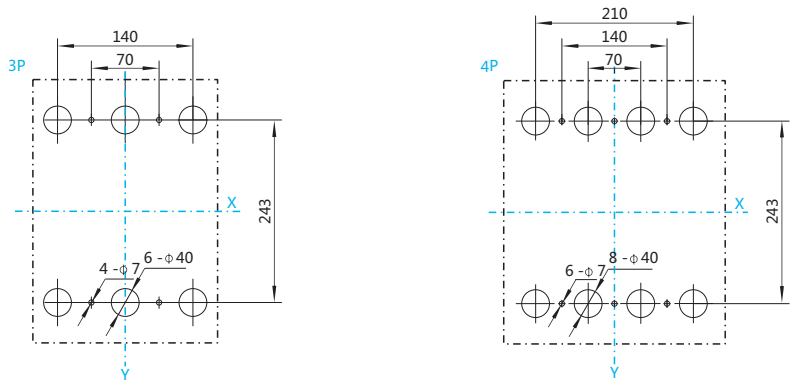

«Электро-Профи» - www.ep.ru

M

NXM-1000S/H, NXMS-1000S/H, NXHM-1000

Plug-in rear connection, dimension (mm)

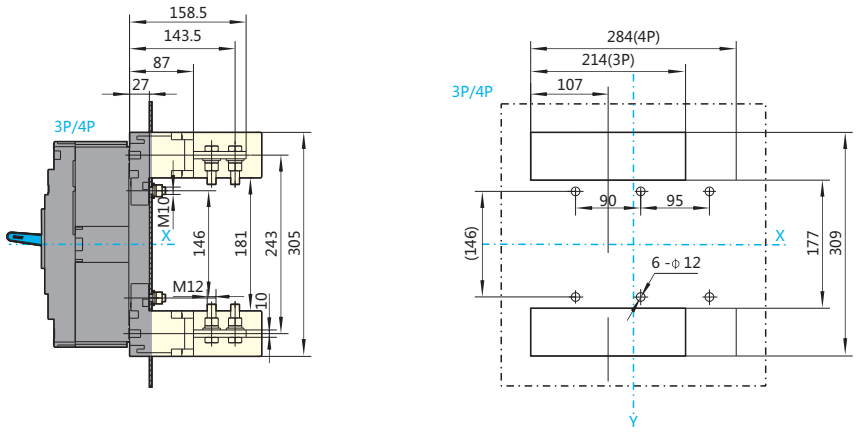

NXM-1000S/H, NXMS-1000S/H, NXHM-1000

Cabinet gate hole (small) size (mm)

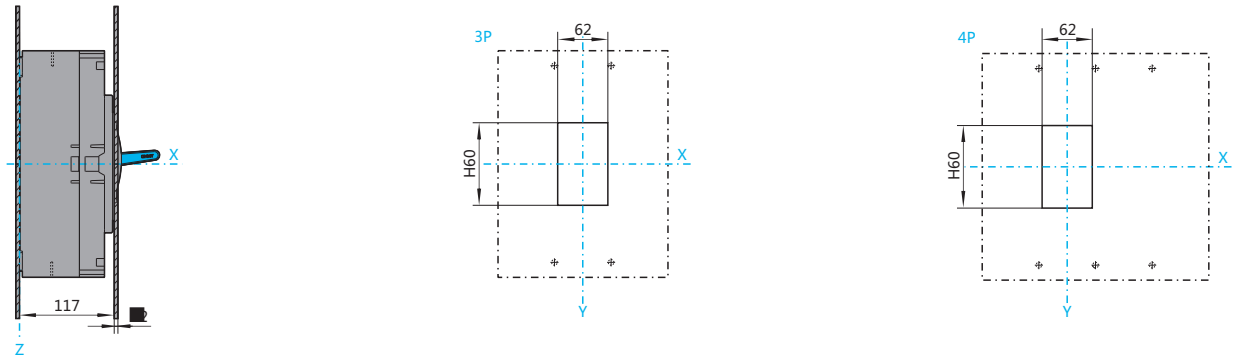

NXM-1000S/H, NXMS-1000S/H, NXHM-1000

Cabinet gate hole (large) size (mm)

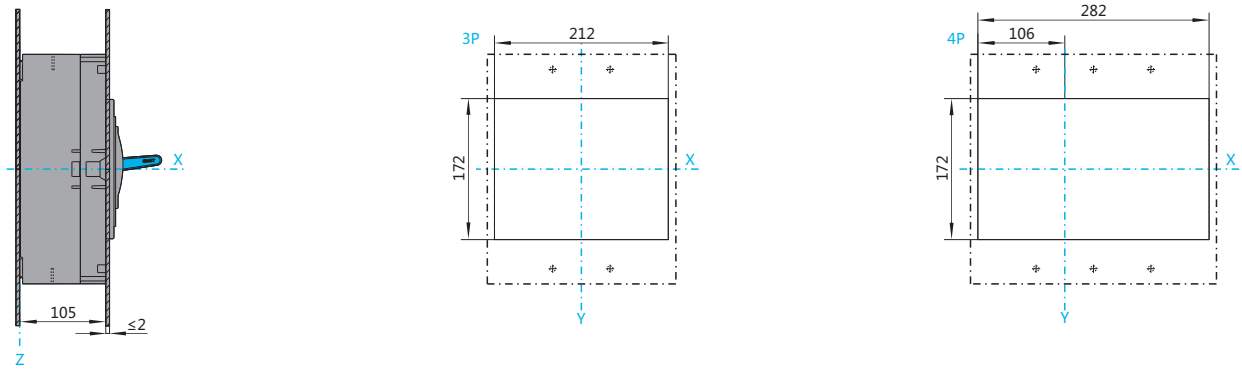

Specification and model	H60	Remark
NXM-1000S/H	102	3P/4P
NXMS-1000S/H	95	3P/4P
NXHM-1000	102	3P/4P

«Электро-Профи» - www.ep.ru

NXM-1250S/H,1600S/H

Front connection, dimension (mm)

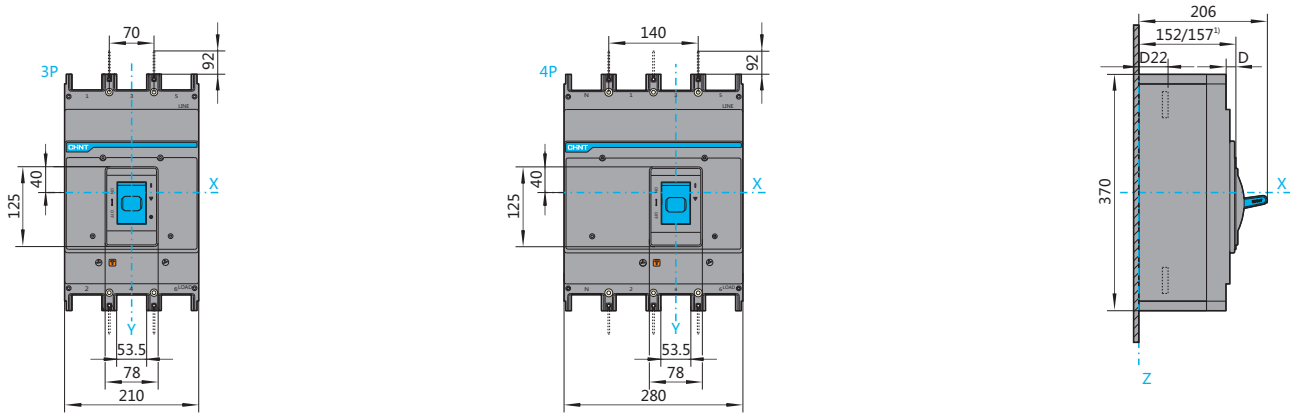

NXMS-1250S/H,1600S/H

Front connection, dimension (mm)

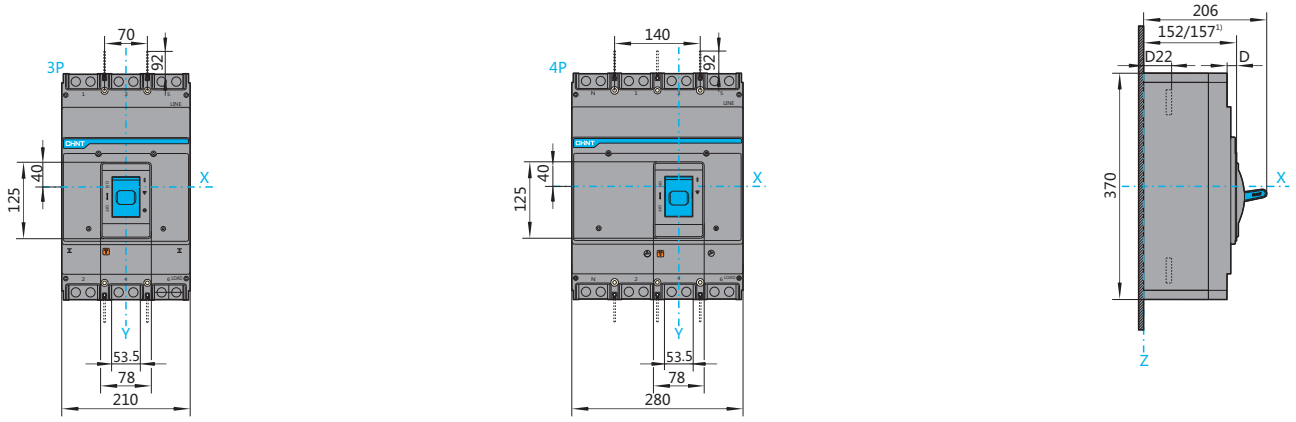

NXM-1250S/H,1600S/H，NXMS-1250S/H,1600S/H

Installation size of baseplate (mm)

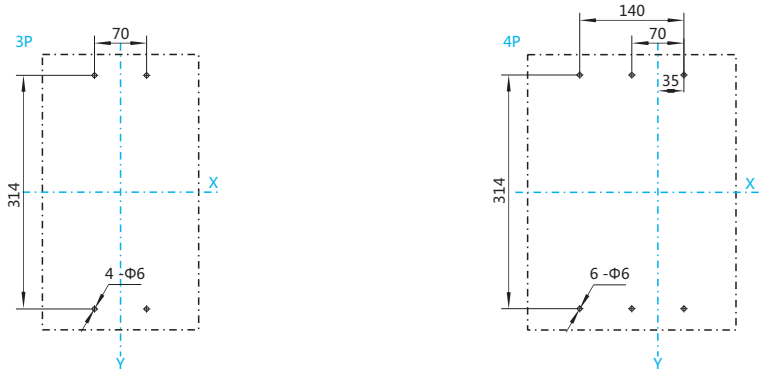

Specification and model	D22	D	Remark
NXM-1250S/H,1600S/H	55	15.5	1000A
	57		1250A
	65		1600A
NXMS-1250S/H,1600S/H	57	15.5	1250A
	65		1600A

«Электро-Профи» - www.ep.ru

M

NXM-1250S/H,1600S/H，NXMS-1250S/H,1600S/H

Cabinet gate hole (small) size (mm)

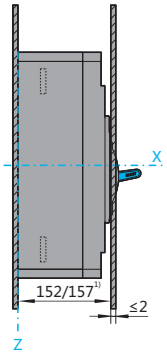

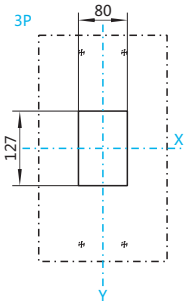

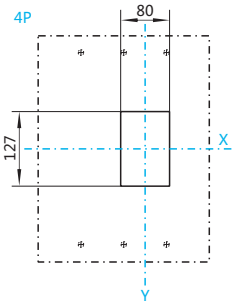

[1]152 is for frame current 1250A breaker;
157 is for frame current 1600A breaker

NXM-1600S/H, NXMS-1600S/H/, NXHM-1600

Cabinet gate hole (large) size (mm)

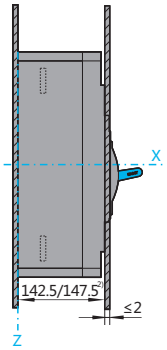

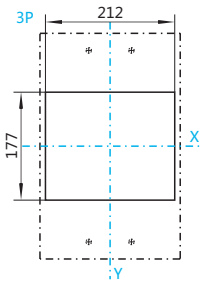

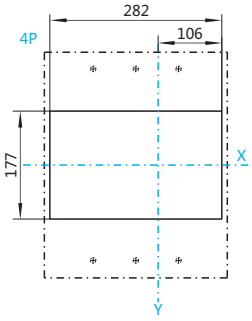

[2]152 is for frame current 1250A breaker;
157 is for frame current 1600A breaker

«Электро-Профи» - www.ep.ru

NXM-63

Tripping curve

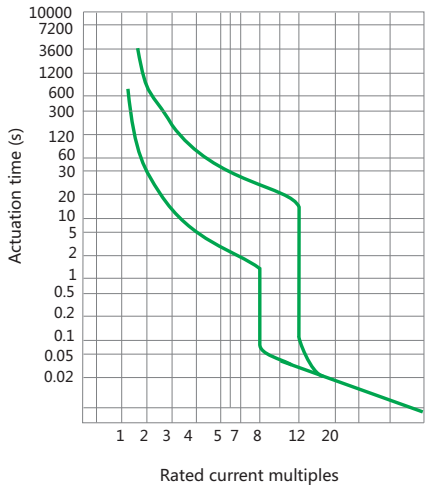

NXM-63

Temperature compensation curve

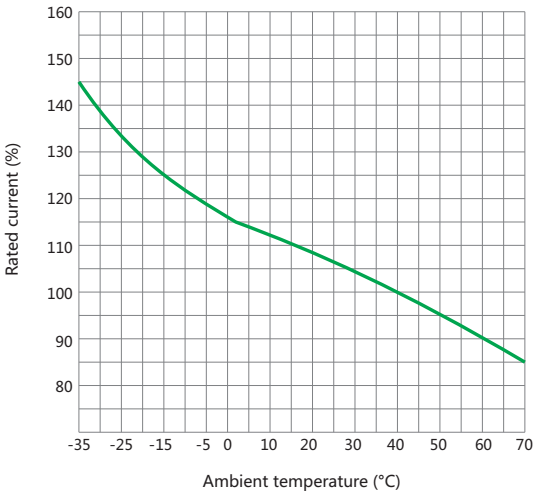

NXM-125, NXMLE-125

Tripping curve

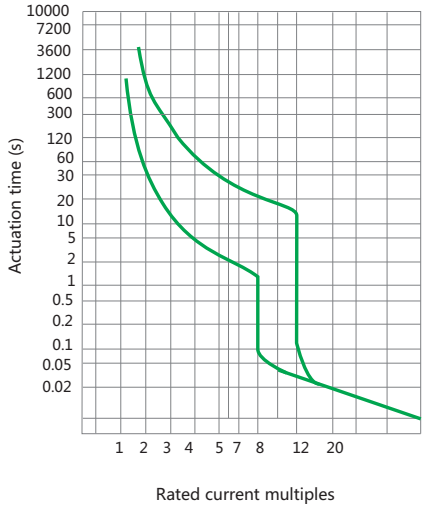

NXM-125, NXMLE-125

Temperature compensation curve

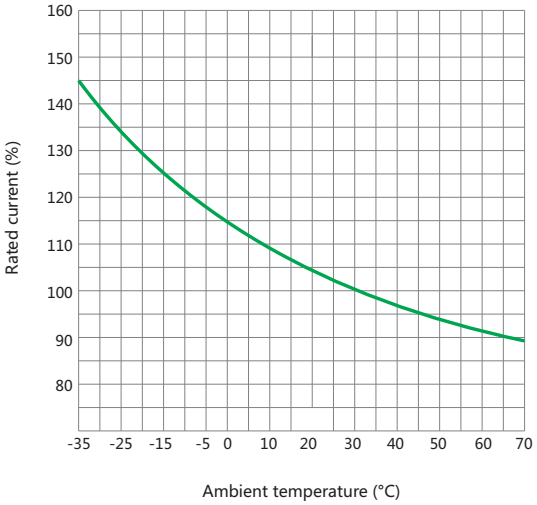

«Электро-Профи» - www.ep.ru

M

NXM-160, NXMLE-160

Tripping curve

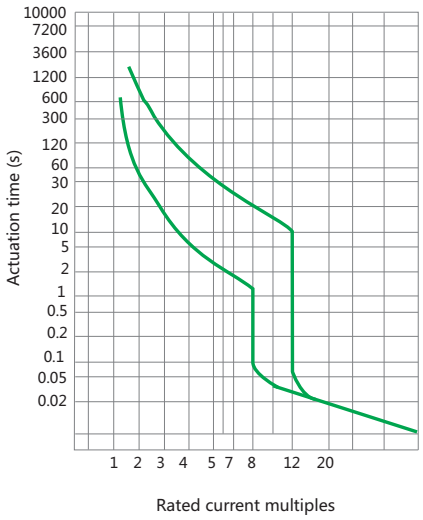

NXM-160, NXMLE-160

Temperature compensation curve

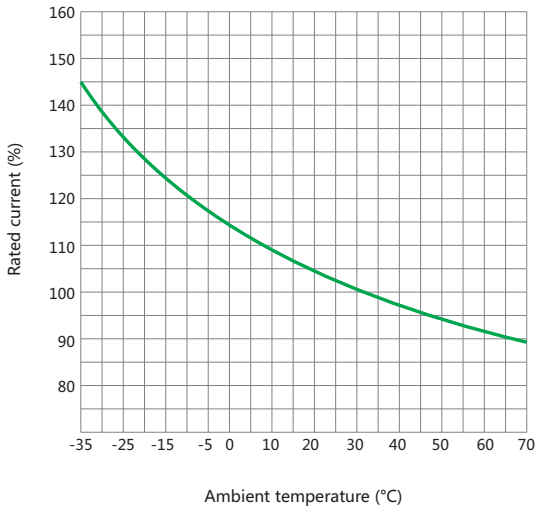

NXM-250, NXMLE-250

Tripping curve

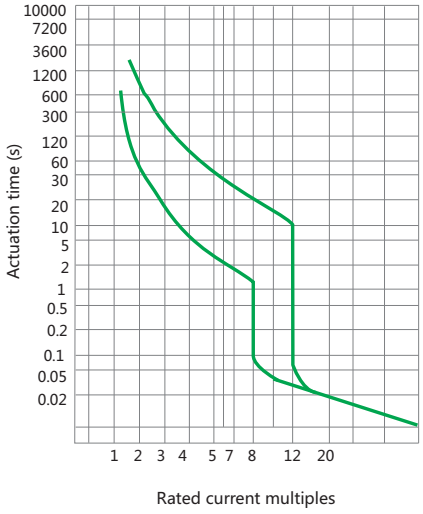

NXM-250, NXMLE-250

Temperature compensation curve

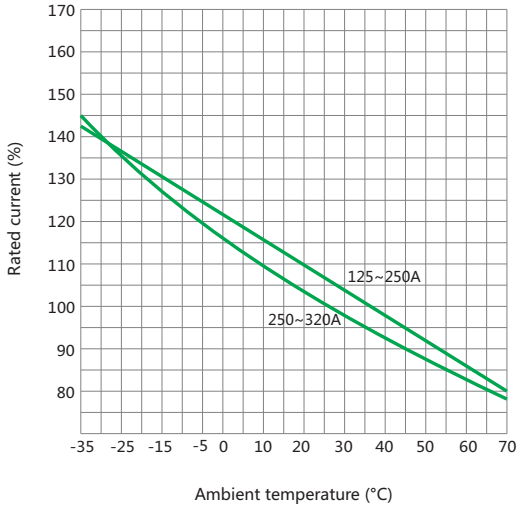

«Электро-Профи» - www.ep.ru

NXM-400/630, NXMLE-400/630

Tripping curve

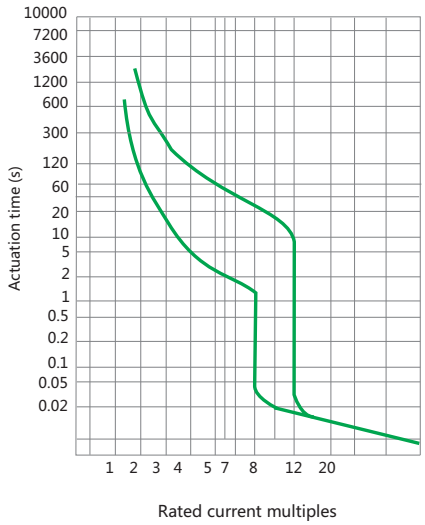

NXM-400/630, NXMLE-400/630

Temperature compensation curve

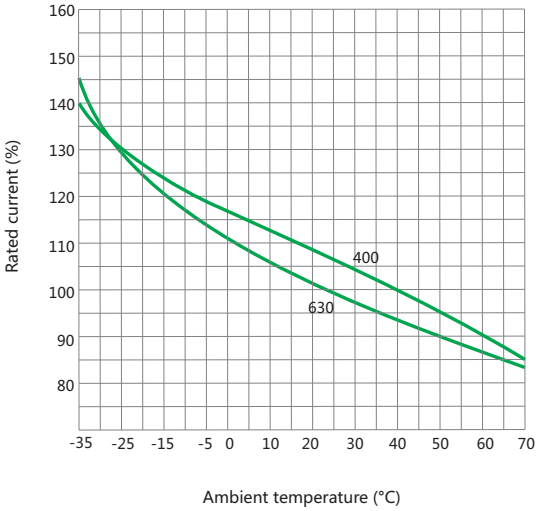

NXM-800

Tripping curve

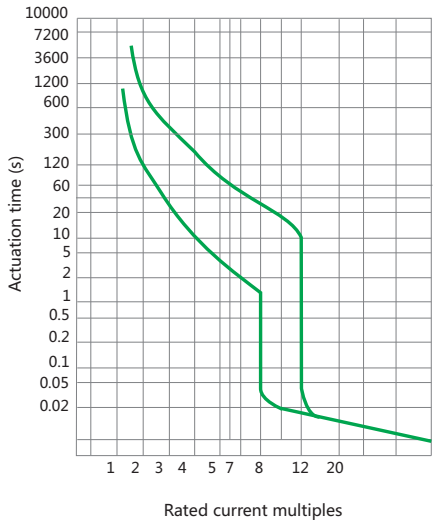

NXM-800

Temperature compensation curve

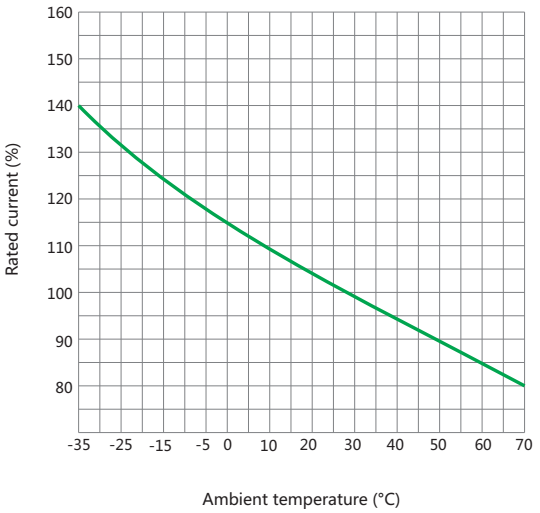

«Электро-Профи» - www.ep.ru

M

NXM-1000

Tripping curve

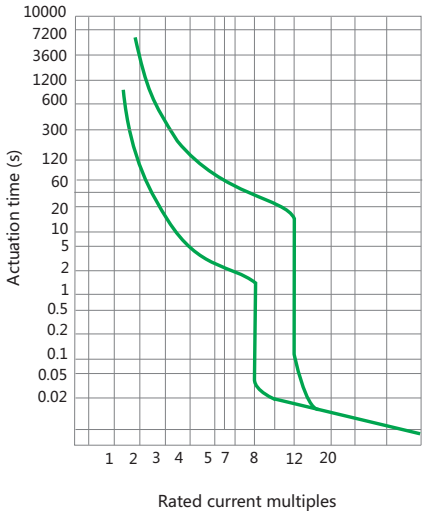

NXM-1000

Temperature compensation curve

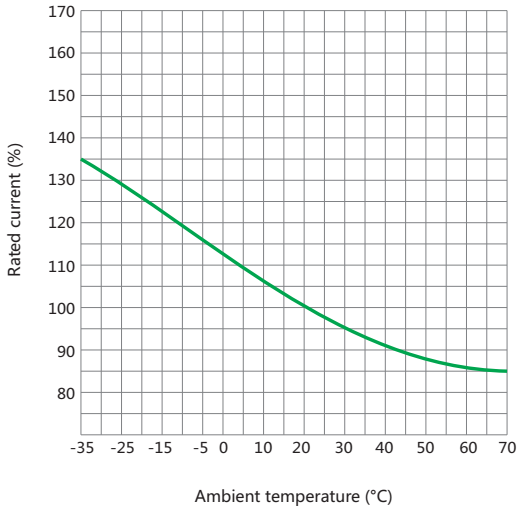

NXM-1250,1600

Tripping curve

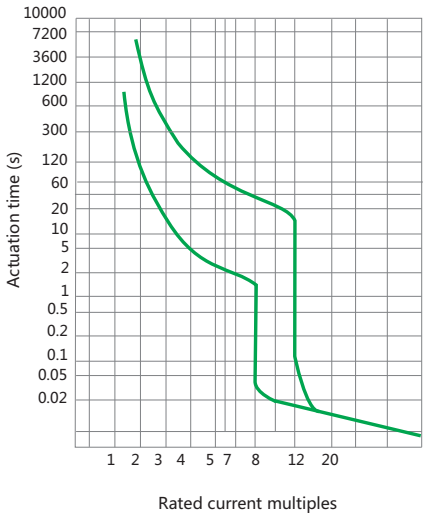

NXM-1250,1600

Temperature compensation curve

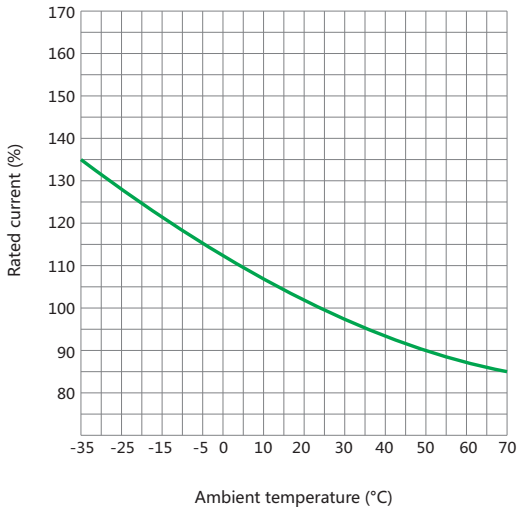

«Электро-Профи» - www.ep.ru

NXMS series electronic moulded case circuit breaker

Tripping curve of distribution protection

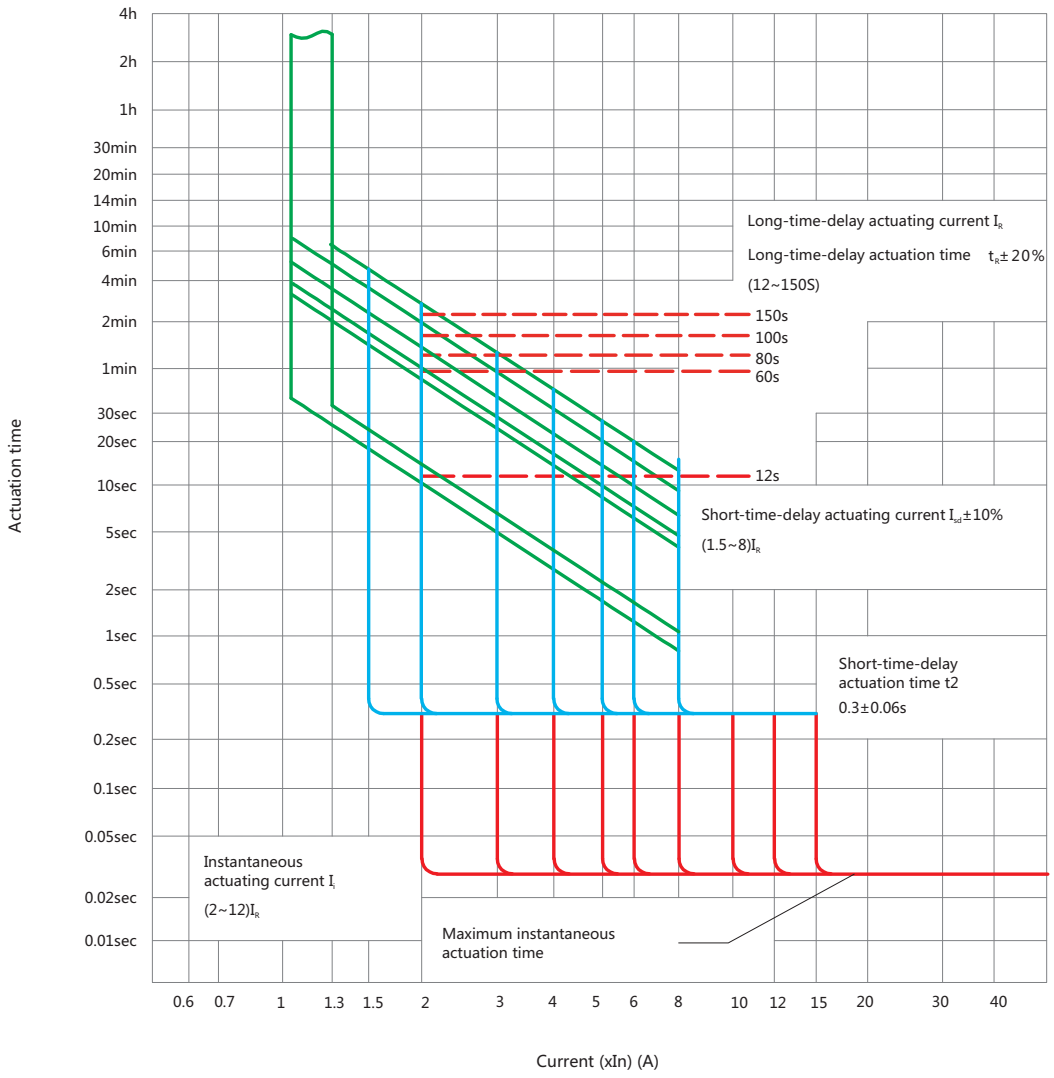

«Электро-Профи» - www.ep.ru

NXMS series electronic moulded case circuit breaker

Tripping curve of motor protection

M

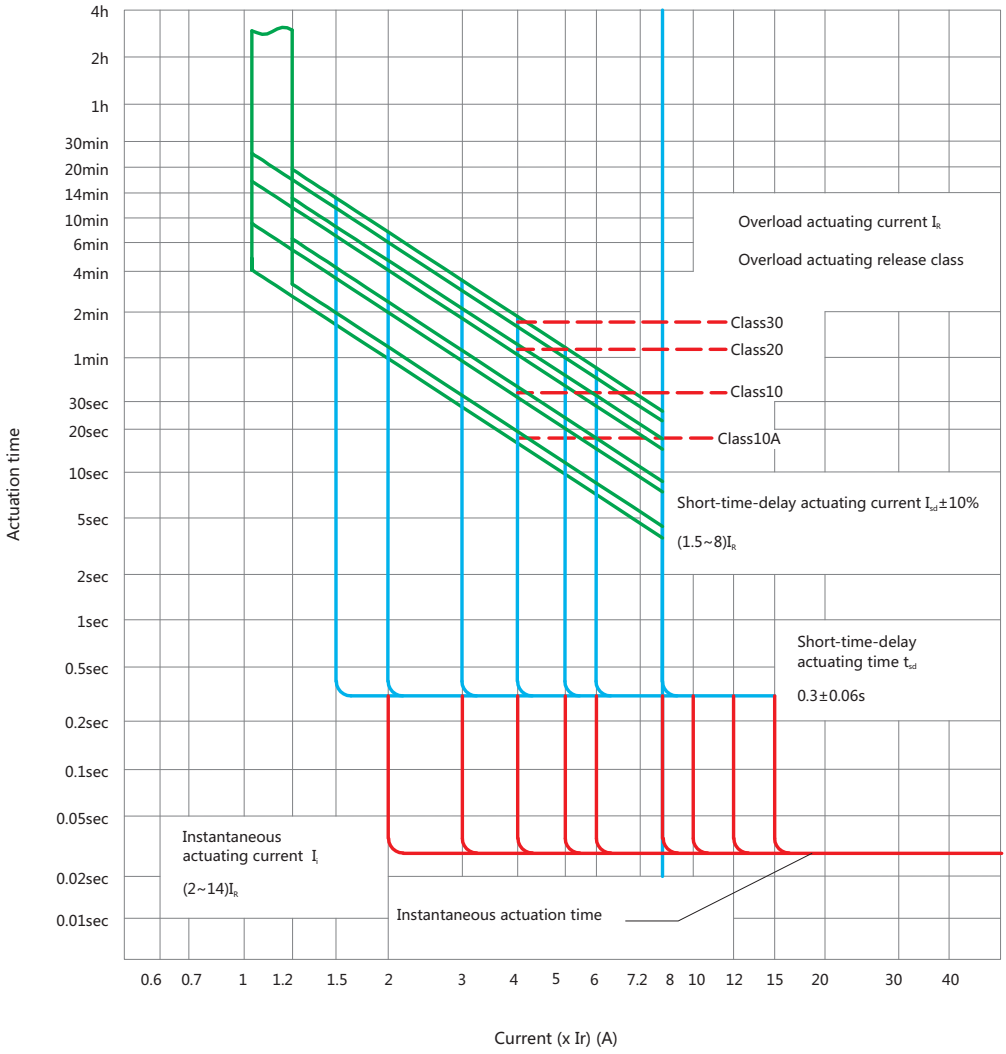

«Электро-Профи» - www.ep.ru

CHINT ELECTRIC | Next series

The Next Reliable Choice

Air Circuit Breaker



Built-in busbar temperature sensor, to control every aspect

Monitors, displays and forecasts the temperature of busbar in real time, with risk clear at a glance and security under control.

More detailed division of frame size, can fully cover various demands

With a frame size of 1600A, 2000A, 3200A, 4000A, it provides a more cost-effective choice.



With a USB port for better human-machine interaction

Connected with PC or mobile devices through the USB port, lets you manage functions such as data reading, parameter setting, on-line detection and failure recording.

Absolute adaptability, with steady and reliable operation in extreme conditions

-35°C/+70°C operating temperature range. Meets several applications requirements.

«Электро-Профи» - www.ep.ru

Real-time temperature sensor

Continuous function monitoring
More accurate risk identification



«Электро-Профи» - www.ep.ru

CHINT ELECTRIC | Next series

Air Circuit Breaker

NXA series air circuit breaker P-001

Overview P-003

Product selection P-005

Functions and features

Technical parameters P-009
Intelligent controller P-011
Protection feature P-015
Measurement precision of the intelligent controller P-017
Accessories P-019
Capacity derating and power loss P-023
Dimension of busbar P-026
Selective protection between NM8 and NXA P-027

Installation and wiring

Dimensions and installation P-029
Secondary circuit wiring P-051

Annex

Ⅰ Configuration P-056
Ⅱ Selection table P-057
Ⅲ Earth fault protection P-058
Ⅳ Source-changeover controller P-061

«Электро-Профи» - www.ep.ru

Structural features of the circuit breaker



«Электро-Профи» - www.ep.ru

Circuit breaker description

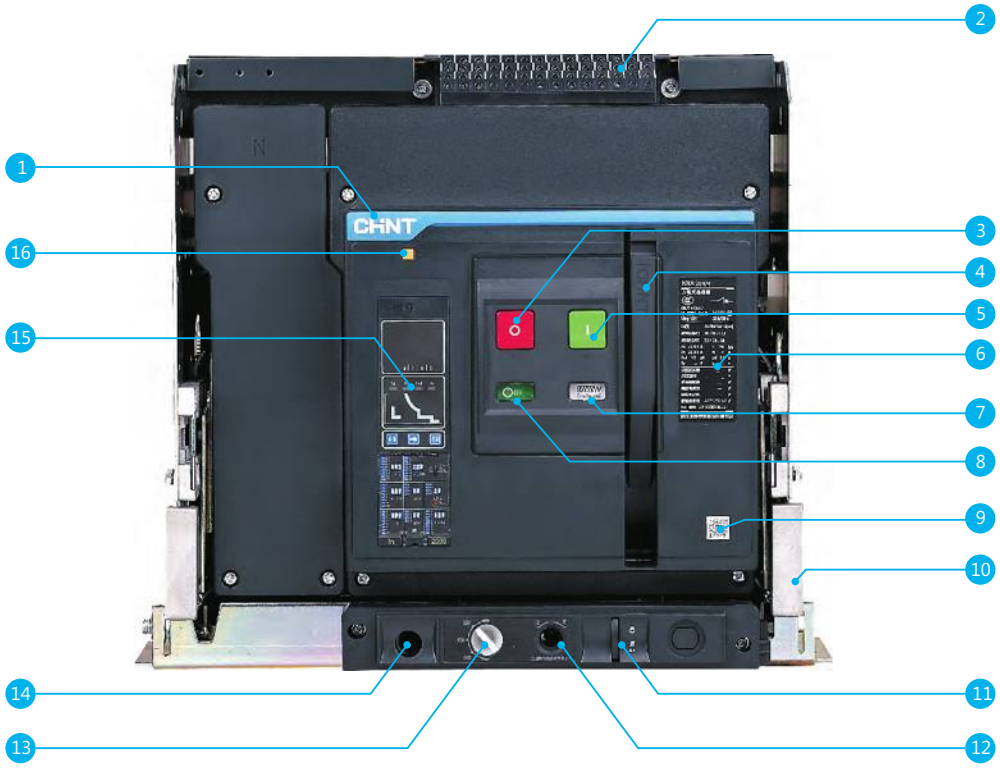

1	Trademark
2	Secondary wiring terminal
3	Breaking button
4	Energy-storage handle
5	Making button
6	Nameplate
7	Energy-storage/release indicator
8	Breaking/making indicator
9	QR code
10	Extraction draw plate (only applicable to draw-out type)
11	"Disconnected" position locking (only applicable to draw-out type)
12	Racking-handle entry (only applicable to draw-out type)
13	Position indication (only applicable to draw-out type)
14	Racking-handle storage (only applicable to draw-out type)
15	Intelligent controller
16	Fault-breaking indicator reset button

«Электро-Профи» - www.ep.ru











Circuit breaker

- Frame size (A): 1600, 2000, 3200, 4000, 6300
- Breaking capacity: N,S,H
- Rated operational voltage Ue (VAC): 380/400/415, 440/525/690
- Number of poles: 3P, 4P
- Installation method: draw-out type, fixed type
- CE KEMA EUR

Operation conditions and environment adaptability

- Operation temperature:
  The electrical and mechanical characteristics are applicable to the ambient temperature of -5℃-+40℃. NXA can also operate in the ambient temperature of -45℃-+70℃ (M type, A type), -20℃-+70℃ (P type, H type, CD-1), the derating factor is seen in P23-24.
- Storage conditions: apply to -45℃~+70℃
- NXA can resist the following electromagnetic interference
  — Overvoltage generated by electromagnetic interference
  — Overvoltage caused by environment interference or a power distributing system
  — Electrostatic discharge of radio waves (radio, intercom, radar and the like)
- NXA has successfully passed the test for electromagnetic compatibility specified according to the following standards (EMC) IEC/EN 60947-2
  Annex F
  The test can guarantee no false tripping and no interference on tripping time
- Protection grade:
  Front IP 20, other side IP 00

Connection

- Rear connection
  Horizontal connection, vertical connection
- Optional accessories
  Interphase barrier

Lock

- Padlocks of "Making" and "Breaking" push button
- Position padlock (for locking the circuit breaker at disconnected position)
- Chassis padlock
- Door interlock: the circuit breaker is arranged at the connected or test part so as to prohibit to open the door

Indication contact

- Standard contact
  Making and breaking indication contacts
  Fault tripping indication contact
- Optional accessories
  Position indication contact
  Spring charged indication contact

«Электро-Профи» - www.ep.ru

N

Drawowt type breaker


Drawer seat

+


Body

=


Drawout type breaker

Fixed type breaker


NXA16


NXA20～NXA40

Note:NXA63 fixed type is seen in P45

Accessories


Interphased partition


Secondary wiring terminal-drawout type


Secondary wiring terminal-fixed type


N pole CT



Counter


PSU-1

«Электро-Профи» - www.ep.ru

NXA series air circuit breaker

Frame size	Rated current / Breaking capacity	400	630	800	1000	1250	1600	2000	2500	3200	3600	4000	5000	6300
1600A	N	■	■	■	■	■	■							
	S	■	■	■	■	■	■							
	H	■	■	■	■	■	■							
2000A	N		■	■	■	■	■	■						
	S		■	■	■	■	■	■						
	H		■	■	■	■	■	■						
3200A	N						■	■	■	■				
	S						■	■	■	■				
	H						■	■	■	■				
4000A	N									■	■	■		
	S									■	■	■		
	H									■	■	■		
6300A	H											■	■	■

Model definition and description

NXA	16	N	04	- M		D	3	- AC230	M	Other
Code of Product	Code of frame size	Code of breaking capacity	Code of rated current	Code of intelligent controller		Code of installation method	Code of number of poles	Code of control circuit voltage	Code of operation mode	Code of special requirement
	16:1600A (04-16)	N: basic type	04-400A	M: basic type	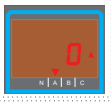	D: draw-out type	3: 3 poles	AC 230: AC 230V	No code: motor operation	No code: no special requirement
	20:2000A (06-20)	S: standard type	06-630A	A: current type		F: fixed type	4: 4 poles	AC 400: AC 400V	M: manual operation	Special requirements code, such as: UVT
	32:3200A (16-32)	H: advanced type	08-800A	P: power type	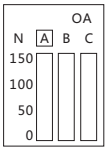			DC 110: DC 110V		
	40:4000A (32-40)		10-1000A	H: harmonic type				DC 220: DC 220V		
	63:6300A (40-63)		12-1250A	PT: power +temperature type						
			16-1600A	HT: harmonic + temperature type						
			20-2000A							
			25-2500A							
			32-3200A							
			36-3600A							
			40-4000A							
			50-5000A							
			63-6300A							

Note: [1] Intelligent controller PT/HT type. The basic functions are the same with P/H type. T refers to the internal temperature measurement function.

[2] Manual operation does not contain motor-driven mechanism, closing electromagnet and shunt release. Motor operation contains all standard accessories of remote operation.

[3] Auxiliary working voltage of the intelligent controller: corresponding power modules is required if DC220V or DC110V is selected.

[4] NXA16N10-AD3-AC230: frame size is 1600A, N type breaking capacity, rated current is 1000A, A type intelligent controller, draw-out type and 3 poles, control voltage is AC 230V motor operation.

«Электро-Профи» - www.ep.ru

Model definition and description-intelligent controller

NXA	16	TU	M	-	04	-	3	-	AC230
Code of product	Code of frame size	Intelligent controller	Code of intelligent controller		Code of rated current		Code of number of poles		Code of auxiliary power supply
	16:1600A (04-16)		M: basic type		04-400A; 06-630A 08-800A; 10-1000A 12-1250A; 16-1600A 20-2000A; 25-2500A 32-3200A; 36-3600A 40-4000A; 50-5000A 63-6300A		3: 3 poles		AC 230: AC 230V
	20:2000A (06-20)		A: current type				4: 4 poles		AC 400: AC 400V
	32:3200A (16-32)		P: power type						DC 110: DC 110V
	40:4000A (32-40)		H: harmonic type						DC 220: DC 220V
	63:6300A (40-63)		PT: power+ temperature type						
			HT: harmonic + temperature type						

Model definition and description-accessories

NXA	16	-	CC	-	230VAC
Code of product	Frame size		Code of accessories		Code of rated voltage
	16:1600A		CC: Closed electromagnet		230VAC: AC230V
	20:2000A		ST: Shunt tripper		400VAC: AC400V
	32:3200A		MO: Motor		110VDC: DC110V
	40:4000A		UVT: Undervoltage tripper		220VDC: DC220V
	63:6300A		ASUVT:Self-priming undervoltage tripper		Rated voltage+delay time (1s、3s、5s、7s)
	20/40:2000A-4000A		UVTD:UVT delay unit		
	20/32:2000A-3200A		ASUVTD: ASUVT delay unit		
	20/63:2000A-6300A				

«Электро-Профи» - www.ep.ru

Model definition and description-accessories

NXA	16	OF	C04
Code of product	Frame size	Code of accessories	Specification of accessories
	16:1600A	OF: Auxiliary contact	C04: Four groups of contacts
	20:2000A		C05: Five groups of contacts
	32:3200A		C06: Six groups of contacts
	40:4000A		N3: Three normally open and three normally closed
	63:6300A		N4: Four normally open and four normally closed
	20/40:2000A-4000A		N5: Five normally open and five normally closed
	20/32:2000A-3200A	KL: Key lock	1S1S: One lock and one key
	20/63:2000A-6300A		2S1S: Two locks and one key
			3S2S: Three locks and two keys
		FCDP: Fixed type door frame	
		DCDP: Draw-out type door frame	
		FD: Fixed type interphased partition	
		DD: Draw-out type interphased partition	
		CE-CD-CT: Position signal	
		ILK2: Mechanical interlocking two interlocking steel cables	

«Электро-Профи» - www.ep.ru

Note

«Электро-Профи» - www.ep.ru

Technical parameters

Features

Number of poles	3/4 6300A only 3P	
Rated operational voltage Ue (V)	380/400/415 , 440/525/690V	
Rated insulation voltage Ui (V)	1000	
Rated impulse withstand voltage Uimp (kV)	12	
Rated frequency (Hz)	50/60	
Flashover distance (mm)	0	
Applicable to isolation	IEC/EN 60947-2	Applicable
Pollution grade	IEC 60664-1	N:3

Frame size			**1600A**					
Rated current (A)			400	630	800	1000	1250	1600
Rated current of the fourth pole (A)			400	630	800	1000	1250	1600
Type of the circuit breaker			**N**	**S**	**H**			
Rated ultimate short circuit breaking capacity (kA rms) VAC 50/60Hz	Icu	380/400/415V	50	42	50			
		440/525/690V	30	36	36			
Rated service short circuit breaking capacity (kA rms) VAC 50/60Hz	Ics	380/400/415V	42	42	50			
		440/525/690V	30	36	36			
Utilization category			B					
Rated short-time withstand current (kA rms) VAC 50/60Hz	Icw 1s	380/400/415V	42	42	42			
		440/525/690V	30	36	36			
	Icw 3s	380/400/415V	20	25	25			
		440/525/690V	-	-	-			
Closed capacity (kA peak) VAC 50/60Hz	Icm	380/400/415V	105	88.2	105			
		440/525/690V	63	75.6	75.6			
Making current tripping protection function (MCR kA rms)			10	16	16			
Breaking time (ms)			32					
Closing time (ms)			70					
Installation, connection and service life								
Service life C/O cycle	Mechanical	Without maintenance	15000					
	Electrical	Without maintenance	8000					
Connection	Horizontal		▪					
Size (width × depth × height)	Fixed type	3P	254×243.5×318.5					
		4P	324×243.5×318.5					
	Draw-out type	3P	308×331.5×351					
		4P	378×331.5×351					

«Электро-Профи» - www.ep.ru

N

	2000A						3200A				4000A			6300A		
	630	800	1000	1250	1600	2000	1600	2000	2500	3200	3200	3600	4000	4000	5000	6000
	630	800	1000	1250	1600	2000	1600	2000	2500	3200	3200	3600	4000	2000	2500	-
	N	**S**	**H**				**N**	**S**	**H**		**N**	**S**	**H**	**H**		
	80	65	80				80	80	100		80	85	100	120		
	50	55	55				65	70	70		65	75	75	85		
	50	65	65				80	80	85		80	85	85	120		
	50	55	55				65	70	70		65	75	75	85		
	B						B				B			B		
	50	65	65				65	80	85		65	85	85	100		
	50	55	55				65	70	70		65	75	75	75		
	37	42	42				37	50	50		37	50	50	-		
	-	-	-				-	-	-		-	-	-	-		
	176	143	176				176	176	220		176	187	220	264		
	105	121	121				143	154	154		143	165	165	187		
	16	16	16				26	26	26		26	26	26	26		
	32						32				32			32		
	70						70				70			70		
	15000						10000				10000			2000		
	8000						7000				3000			500		
	▪						▪				▪			▪		
	374×344×400						439×373.5×400				550×337.5×400			897×435.5×399		
	469×344×400						554×373.5×400				700×337.5×400			897×435.5×399		
	403×430×438.5						463×499.5×438.5				569×416×438.5			923×500×435.5		
	498×430×438.5						578×499.5×438.5				719×416×438.5			923×500×435.5		

«Электро-Профи» - www.ep.ru

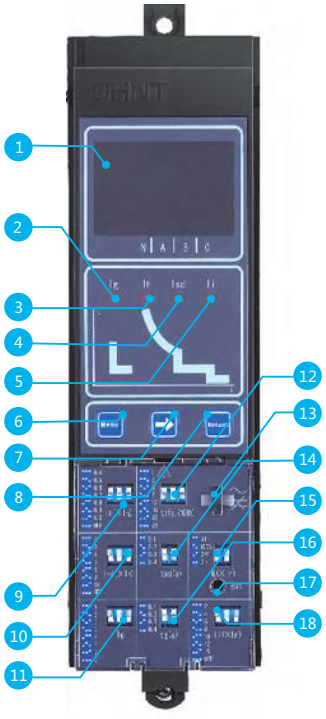

1. Display window: display the current value, the setting parameter, the fault current,the tripping time
2. Ig indicator for earth fault indication
3. Ir indicator for overload long-time-delay tripping
4. Isd indicator for short circuit short-time-delay tripping
5. Ii indicator for short circuit tripping
6. Menu button for inquiring the dial position and fault record
7. Rightward button: turn to the next state when inquiring the dial position
8. Return button: back to the previous level or resetting
9. Overload long-time-delay current setting
10. Short circuit short-time-delay current setting
11. Earth fault current setting
12. Overload long-time-delay time setting
13. Transparent cover lockhole
14. Short circuit short-time-delay time setting
15. Neutral line protection setting
16. Earth fault time-delay setting
17. Test button for simulating 6IR current
18. Short circuit instantaneous current setting

Intelligent controller

M type intelligent controller (Basic type)

Protection
All the protective threshold and time delay are set by a dial switch

- Overload protection
  - Ture RMS long-time-delay protection
  - Thermal memory: heat accumulation before and after tripping

- Short circuit protection
  - Short-time delay (RMS) and instantaneous protection
  - Optional four steps time-delay setting

- Earth fault protection
  Optional four steps time-delay setting

- Neutral line overcurrent protection (4P)
  The neutral protective threshold can be adjusted to 50%, 100% and OFF

- Test function
  Simulating 6Ir test current for test tripping

- Tripping record function

- Ampere meter
  Measure the real and effective value (RMS) of current with the precision of 2% for 40% to 150% in setting

«Электро-Профи» - www.ep.ru

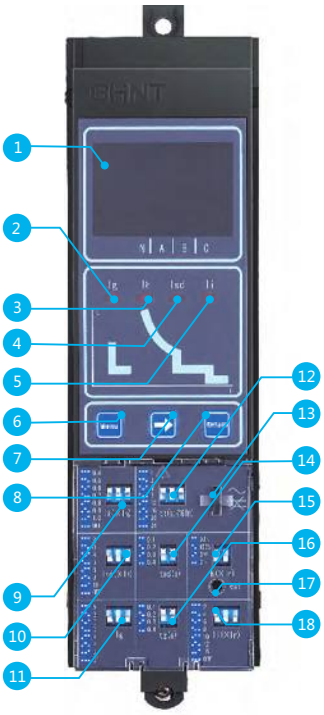

1. Display window: display the current value, the setting parameter, the fault current, the tripping time
2. Ig indicator for earth fault indication
3. Ir indicator for overload long-time-delay tripping
4. Isd indicator for short circuit short-time-delay tripping
5. Ii indicator for short circuit tripping
6. Menu button for inquiring the dial position and fault record
7. Rightward button: turn to the next state when inquiring the dial position
8. Return button: back to the previous level or resetting
9. Overload long-time-delay current setting
10. Short circuit short-time-delay current setting
11. Earth fault current setting
12. Overload long-time-delay time setting
13. Transparent cover lockhole
14. Short circuit short-time-delay time setting
15. Neutral line protection setting
16. Earth fault time-delay setting
17. Test button for simulating 6IR current
18. Short circuit instantaneous current setting

A type intelligent controller (Current type)

Protection
All the protective threshold and time delay are set by a dial switch

- Overload protection
  — Ture RMS long-time-delay protection
  — Thermal memory: heat accumulation before and after tripping

- Short circuit protection
  — Short-time delay (RMS) and instantaneous protection
  — Optional four steps time-delay setting

- Earth fault protection
  Optional four steps time-delay setting

- Neutral line overcurrent protection (4P)
  The neutral protective threshold can be adjusted to 50%, 100% and OFF

- Unbalanced current protection
  Protecting phase failure or three phase unbalance

- Test function
  Simulating 6Ir test current for test tripping

- Tripping record function

- Ampere meter
  Measure the real and effective value (RMS) of current with the precision of 2% for 40% to 150% in setting

N

«Электро-Профи» - www.ep.ru

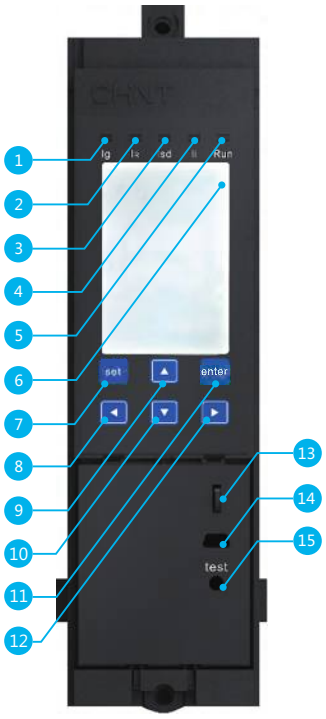

1. Ig indicator for earth fault tripping
2. Ir indicator for overload long-time-delay tripping
3. Isd indicator for short circuit short-time-delay tripping
4. Ii indicator for short circuit tripping
5. Running indicator flickering in normal running
6. LCD screen with three-color backlight. Green stands for normal running, yellow stands for alarming and red stands for tripping.
7. Setting button
8. Leftward button
9. Upward button
10. Downward button
11. Enter button
12. Rightward button
13. Transparent cover lockhole
14. Mini-USB interface
15. Test button for tripping test

P type intelligent controller (Power type)

Protection
Setting all protective threshold values and time-delay by button
The setting values can be displayed on LCD display window

- Protection functions of all A type control units are included
- Earth current protection function (Optional)
  External transformer are configured
- Advanced protection function

— Unbalanced voltage protection
— Overvoltage and undervoltage protection
— Overfrequency and underfrequency protection
— Phase sequence protection
— Reverse power protection function
— Required value protection function

The required value of the real and effective value of each current is calculated within a measurement window. When the required value is off limit, the protection action is carried out. The setting of a sliding time window is in the menu of "setting of a measurement meter".

·A-phase maximal required current value,
·B-phase maximal required current value,
·C-phase maximal required current value,
·N-phase maximal required current value are respectively set for each circumstance of the required value protection without being affected by the setting of the neutral line protection.

- Extended function

— Self-diagnosis by the intelligent controller
— Operation times/fault tripping/alarming/deflection recording function provides the latest ten times of recording
— Main contact abrasion display function for evaluating the contact abrasion degree according to mechanical life, electrical services and breaking capacities of different frames.
— Internal clock function
— A Mini-USB interface is connected with a PC to achieve the functions of protection setting, fault record downloading, whole power quantity detection and parameter reading of a circuit breaker.
— "test" push button

- Electric energy meter

— Current measurement
— Voltage measurement
— Frequency measurement
— Required value measurement
— Power (active power, reactive power and apparent) measurement
— Electric energy (active power, reactive power and apparent) measurement
— Power factor measurement

- Busbar temperature measurement (Optional)
  The temperature of the busbar is measured by a temperature transformer in the busbar, and can be display on a LCD screen in real time. Customers can set the temperature threshold value and set the alarm.
- LCD three-color backlight
  Green stands for normal running, yellow stands for alarming and red stands for tripping.

«Электро-Профи» - www.ep.ru

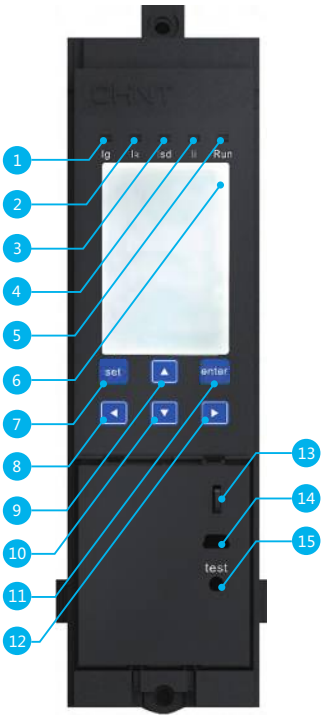

1. Ig indicator for earth fault tripping
2. Ir indicator for overload long-time-delay tripping
3. Isd indicator for short circuit short-time-delay tripping
4. Ii indicator for short circuit tripping
5. Running indicator flickering in normal running
6. LCD screen with three-color backlight. Green stands for normal running, yellow stands for alarming and red stands for tripping.
7. Setting button
8. Leftward button
9. Upward button
10. Downward button
11. Enter button
12. Rightward button
13. Transparent cover lockhole
14. Mini-USB interface
15. Test button for tripping test

H type intelligent controller (Harmonic wave type)

Protection
Setting all protective threshold values and time-delay by button

Besides the protective extended function of all P type control units,
H type control unit also comprises:

- Load monitoring function
- Zone selective interlock (ZSI) (Optional)
- Communication function
  Modbus-RTU communication protocol
- Input/output function
  — 2DI+2DO or 4DO
  — DI signal: AC230V (Standard configuration, and others can be selected);
  DC110V
  — DO needs to be configured with a power supply module (24VDC output) and a relay module.
- Harmonic analysis function
  — Measurement of the fundamental wave current, the fundamental wave line voltage, the fundamental wave phase voltage, the fundamental wave power and each 3-31 odd harmonic wave current percentage (HRIh), the harmonic voltage percentage (HRUh), the total harmonic wave current distortion rate (THDi, thdi) and the total harmonic wave voltage distortion rate (THDu, thdu).
  — The harmonic wave percentage(HR) refers to the ratio of root-mean-square value of the Nth harmonic wave component contained in periodic alternative current quantity to the root-mean-square value of the fundamental wave component, and is expressed in percentage.

N

«Электро-Профи» - www.ep.ru

Protection features

The protection features of the intelligent controller comprise inverse time characteristic and constant time characteristic. When the fault current exceeds the set value of the inverse time limit, the controller performs constant time protection.
The inverse time limit corresponds to the feature curve I^2t.

Overload long-time-delay protection feature

Overload long-time-delay protection action threshold value
<1.05Ir ： > 2h, no action
≥1.3Ir ： < 1h, action

Ir current setting value range: 0.4In, 0.5 In, 0.6 In, 0.7 In, 0.8 In, 0.9 In, 1.0 In+OFF (M/A);0.4In~1.0In+OFF(P/H)
Inverse time limit action feature: I^2t, wherein $t=(6/N)^2*tr$

Setting Multiple of Current	Action Time							
1.5Ir	16	32	64	128	192	256	320	384
2Ir	9	18	36	72	108	144	180	216
6Ir	1	2	4	8	12	16	20	24

Note: N --- the multiple I/Ir obtained by dividing failure current by set current
t --- time delay action of the failure action
tr --- long-time-delay set value
Allowed error of the action time ±15%
Conventional factory tuning:Ir=1.0In
tr=2s@6Ir

Short circuit short-time-delay protection feature

Short circuit short-time-delay protection action threshold value
＜0.85Isd: no action
＞1.15Isd: action
Isd current set value range: 2Ir, 3Ir , 4Ir, 5Ir, 6Ir , 8Ir, 10Ir +OFF (max 50kA，M/A);2Ir~10Ir+OFF(max 50kA，P/H)

Current	Action time		Remark
Isd < I≤10Ir	Inverse time limit	Action feature $I^2t=(10Ir)^2tsd$	P, H
		Setting time s 0.1, 0.2, 0.3, 0.4	
I≥1.1Isd	Constant time limit	Setting time s 0.1, 0.2, 0.3, 0.4	M, A, P, H
		Minimum s 0.06, 0.16, 0.255, 0.34	
		Maximum s 0.14, 0.24, 0.345, 0.46	
	Return time	0.05, 0.14, 0.25, 0.33	

Note: Isd---short-time-delay current set value
I--- failure current value
Ir— long-time-delay set value
t--- failure action time-delay time
tsd---short-time-delay inverse time limit set value
Permissible error of action time ±15%
Conventional factory tuning:Isd=8Ir(Ir < 6250A)
Isd=50kA(Ir≥6250A)
tsd=0.4s

«Электро-Профи» - www.ep.ru

Short circuit instantaneous protection features

Short circuit instantaneous protection action threshold value
＜0.85Ii: no action
＞1.15Ii: action
The current setting value of instantaneous action: 2In, 4In, 6In, 8In, 10In, 12In, 15In+OFF(NXA40 max50kA，NXA63 max63kA，M/A);
2In~15In+OFF(NXA40 max 50kA，NXA63 max63kA P/H)
Note: action time≤50ms
Conventional factory tuning:Ii=12In(In=400A~5000A)
Ii=63kA(In=6300A)

Earth fault protection action features

Earth fault protection action threshold value
＜0.9Ig: no action
＞1.1Ig: action
M/A

Current setting value	A	B	C	D	E	F	G	OFF
NXA16, 20	0.2In	0.3In	0.4In	0.5In	0.6In	0.8In	In	
NXA32, 40, 63	500A	640A	800A	960A	1040A	1120A	1200A	
tg(s)	**Inverse time limit**	**Action features**						
P/H NXA16、20: 0.2In~1.0In+OFF NXA32、40、63: 500A~1200A+OFF		$t=\frac{(Ig)^2}{I^2}\times tg$						
Constant time limit	Setting time (s)	0.1	0.2	0.3	0.4			
	Minimum (s)	0.06	0.16	0.255	0.34			
	Maximal (s)	0.14	0.24	0.345	0.46			
	Return time	0.05	0.14	0.25	0.33			

Note: Ig --- earth fault protection setting value. Default setting:NXA16/20:Ig=0.5In
When In≥1250A，Ig max=1200A NXA32/40/63: Ig=800A
I --- failure current value
t --- failure action time-delay time
tg --- earthing inverse time limit set value
The permissible error of the inverse time limit action time: ±15%
Conventional factory tuning:OFF

Controller minimum display current

Frame	In	Minimum display value (A)
1600	400～1600	60
2000	630～2000	60
≥3200	≥1600	120

«Электро-Профи» - www.ep.ru

Measurement precision of the intelligent controller

Current measurement	
Measurement range	Ia, Ib, Ic and I_N are not less than 15In (rated current of the circuit breaker)
Measurement precision	Below 0.1In: the measurement is inaccurate
	0.1In-0.4In: the accuracy will be changed linearly from 5% to 2%
	0.4In-1.5In: the accuracy is 2%
	＞1.5In: the accuracy will be changed linearly from 2% to 15%
	The measurement accuracy of the earthing current is 10%

Voltage measurement	
Measurement range	Line voltage: 0V~600V
	Phase voltage: 0V~300V
Measurement precision	Error: ±1%

Frequency	
Measurement range	40HZ~70HZ
Measurement precision	Error: ± 0.1HZ

Power	
Measurement mode	The effective value mode
Measurement content	3P type: total active power, total reactive power and total apparent power
	4P type: phase splitting active power, phase splitting reactive power, phase splitting apparent power, total active power, total reactive power, total apparent power
Measurement power	Active power: -32768KW~ + 32767KW
	Reactive power: -32768Kvar~ + 32767Kvar
	Apparent power: 0KVA~65535KVA
	Error: ±2.5%

Power factor	
Measurement content	phase splitting power factor，total power factor
Measurement range	-1.00~+1.00

Electric energy	
Measurement content	Input reactive electric energy (EQin), output reactive electric energy (Eqout)
	Input active electric energy (EPin), output active electric energy (Epout)
	Total active electric energy (EPtotal), total reactive electric energy (EQtotal), total apparent electric energy (Estotal)
Measurement range	Active electric energy: -32768KWh~ + 32767KWh
	Reactive electric energy: -32768Kvarh~ + 32767Kvarh
	Apparent electric energy: 0~65535KVAh
Measurement precision	Error ±2.5%

Harmonic wave measurement	
Fundamental wave measurement	Current: Ia, Ib, Ic,I_N
	Voltage: Uan，Ubn，Ucn
Total harmonic wave distortion THDu and thdu	THD: the total distortion rate of the harmonic wave relatively to the fundamental wave
	Thd: the total distortion rate of the harmonic wave relatively to the effective value
Amplitude wave spectrum of harmonic wave	The controller can display FFT amplitude of odd harmonic wave from 3 to 31in percentage
Measurement precision of control unit	±2%

«Электро-Профи» - www.ep.ru

LSI curves

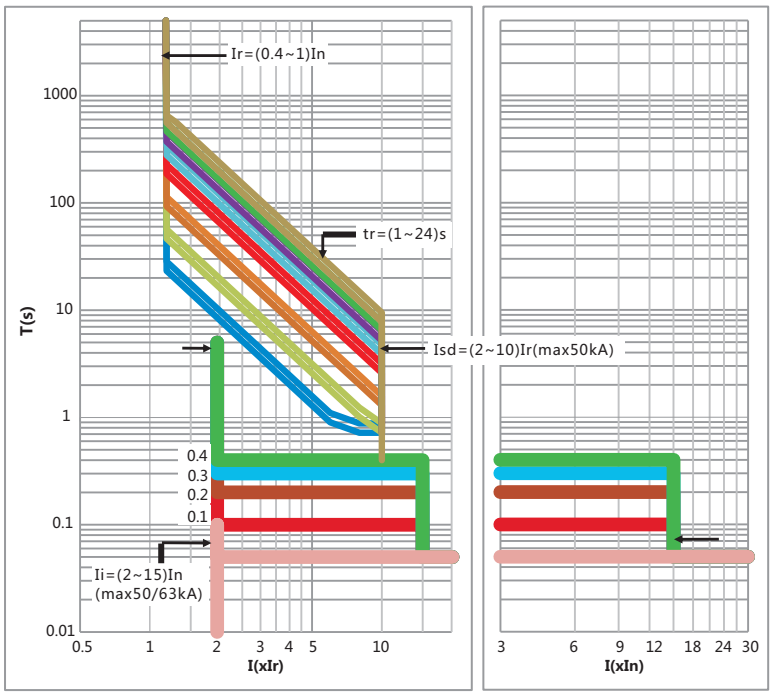

Fig.1 Overcurrent protection curves

Earth fault protection curves

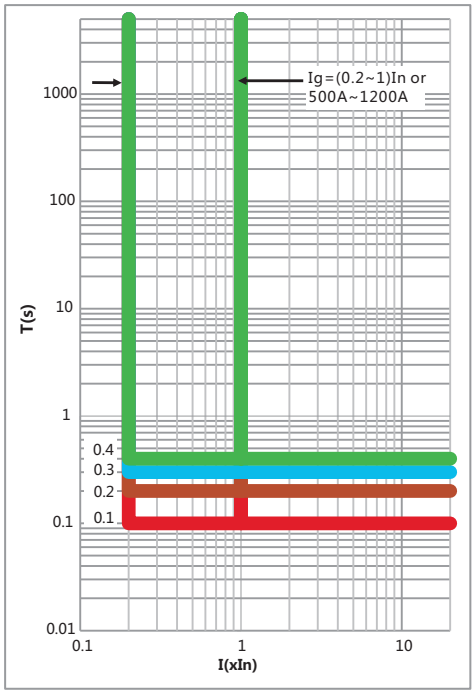

Fig.2 Asymmetrical earth fault protection curves

«Электро-Профи» - www.ep.ru









Accessories: locks

Pushbutton lock

The pushbutton lock is to lock the circuit breaker by a transperant conver blocks so as to prevent the breaking button and the making button of the circuit breaker from misoperation and guarantee the reliable running of the circuit breaker.

Body lock

- A key lock includes four types. The latter two are applied to 2 input and 1 connect power distribution system:

— Random lock
— One lock and one key
— Two locks and one key
— Three locks and two keys

Note：When the user separately purchases the key lock for installation, the panel needs to be opened with a hole opener, and the hole opener is provided by the user.
Hole diameter：NXA16:Φ21mm　NXA20~63:Φ24mm

Safety shutters padlock

- The padlock is prepared by users.Diameter of the lock is no more than Φ5mm. when a circuit breaker body is at the disconnected or test part, the safety shutters automatically block access to the disconnecting contact cluster.

"Disconnected" position padlock

After the chassis and body are locked at "Disconnected" position by a padlock, the racking-handle cannot be inserted into racking-handle entry, and then the position of the body cannot be changed.

Door interlock

- Circuit breaker state door interlock
  A cabinet door is prohibited to be opened when the circuit breaker is closed.
  The cabinet door is allowed to be opened when the circuit breaker is disconnected.
- Circuit breaker position door interlock
  The cabinet door is prohibited to be opened when the circuit breaker is at the connected and test part. The cabinet door is allowed to be opened when the circuit breaker is at the disconnected position.

Cable mechanical interlock

It can realize the interlock of two horizontal or vertical-installed,three poles or four poles,drawout type or fixed type circuit breaker.

Circuit diagram

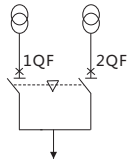

Available running manner

1QF	2QF
0	0
0	1
1	0

Note:a. If need bend the cable,make sure radian is more than 120°.
b. Check and make sure enough lubricating oil of the cable.
c. The maximum distance between two interlock circuit breakers is1.5m.

Operation pushbutton lock (Optional)

Used for locking the break pushbutton and the close pushbutton(Padlock is prepared by users).

«Электро-Профи» - www.ep.ru






Accessories: indication contacts

ON/OFF indication contacts			
Standard configuration		4CO	6CO(NXA16)
Breaking capacity		Current (A) / Voltage (V)	Current (A) / Voltage (V)
Utilization category	VAC(AC-15)	1.3/240, 0.75/415	1.3/240, 0.75/415
	VDC(DC-13)	0.55/110, 0.27/220	0.55/110, 0.27/220

"Connected", "disconnected" and "test" position indication contact		
Standard configuration		1CO/3
Breaking capacity		Current (A) / Voltage (V)
Utilization category	VAC(AC-15)	1.3/240, 0.75/415
	VDC(DC-13)	0.55/110, 0.27/220

Alarming contact		
Standard configuration		1CO
Breaking capacity		Current (A) / Voltage (V)
Utilization category	VAC(AC-15)	1.3/240, 0.75/415
	VDC(DC-13)	0.55/110, 0.27/220

Spring charging indication contact		
Standard configuration		1NO
Breaking capacity		Current (A)/ Voltage (V)
Utilization category	VAC(AC-15)	1.3/240, 0.75/415
	VDC(DC-13)	0.55/110, 0.27/220

Note: [1] CO refers to a switch contact, and a one-normally-open and one-normally-closed contact is matched with a common terminal.
[2] NO refers to a normally open contact. NC refers to a normally closed contact.

Source-changeover systems

- Mechanical interlock
  1 normal and 1 replacement
  2 incoming and 1 busbar
- Source-changeover controller (with adaptor)
  1 normal and 1 replacement: mechanical interlock+2A type controller
  2 incoming and 1 busbar: mechanical interlock+3A type controller

«Электро-Профи» - www.ep.ru



1600A frame MO



2000A~6300A frame MO



1600A frame CC&ST



2000A~6300A frame CC&ST

● Motor-driven mechanism (MO) (Standard configuration)
When a circuit breaker is switched on, an motor operation mechanism stores energy automatically, so that when the circuit breaker is tripped, the device can switch on instantly.
An energy-storage handle as spare when no auxiliary power supply is provided.

Characteristics		
Power supply	VAC 50/60HZ	220/230/240, 380/400/415
	VDC	110, 220
Operation threshold		0.85-1.1Us
Frame size: power loss (VA or W)		16: 75W; 20: 85W; 32: 110W; 40: 110W; 63: 150W
Motor overcurrent		≤1min
Charging time		≤7s
Operation frequency		≤2times/min

● Voltage coils (CC &ST) (Standard configuration)
● Closing coil (CC)
The CC closing coil remotely closes the circuit breaker if the spring mechanism is charged.
● Shunt release (ST)
The ST release instantaneously opens the circuit breaker when energised.

Characteristics		CC	ST
Power supply	VAC 50/60HZ	220/230/240	220/230/240
		380/400/415	380/400/415
	VDC	220, 110	220, 110
Operational voltage		0.85-1.1Us	0.7-1.1Us
Frame size: power loss (VA or W)	AC	16: 400VA; 20~63: 400VA	16: 400VA; 20~63: 400VA
	DC	16: 380W; 20~63: 130W	16: 380W; 20~63: 130W
Circuit breaker response time at Un		40ms-60ms	30ms-50ms

«Электро-Профи» - www.ep.ru



1600A frame UVT



2000~4000A frame UVT





6300A frame ASUVT



2000~4000A frame UVTD

● Undervoltage release (UVT)

When the power supply voltage drops to be a value between 35%-70%, the release coil causes the circuit breaker to trip instantly. If there is no supply on the release, it is impossible to close the circuit breaker, either manually or electrically. Circuit breaker closing is enabled again when the supply voltage of the release returns to 85% of its rated value.

Characteristics			
Power supply	VAC 50/60HZ		220/230/240, 380/400/415
	VDC		–
Operation threshold	Open	0.35-0.7Ue	0.35-0.7Ue
	Closed	0.85Ue	0.85-1.1Ue
Frame size: power loss (W)			16: 220W/15W; 20~40: 220W/13W; 63: 90W/25W

Note: actuation/maintaining.

● UVT delay unit (UVTD)

To eliminate the false tripping caused by short-time voltage drop, UVT action time delay is required. The function is realized by additionally increasing a time delay unit for UVT (Except the NXA16 and NXA63).

Characteristics		
Power supply	VAC 50/60HZ	
Operation threshold	Open	0.35-0.7Ue
	Closed	0.85Ue
Frame size: power loss (VA)	16: 20VA; 20~40: 48VA	
Adjustable time	16:1s, 3s, 5s, 7s; 20~40 : 1s, 3s, 5s; 63:0.3s, 0.5s, 0.7s, 1s, 2s, 3s, 5s, 7s	

N

«Электро-Профи» - www.ep.ru

Capacity derating and power loss

Temperature capacity derating table of the fixed type circuit breaker

1600A frame

Ambient temperature	400A		630A		800A		1000A		1250A		1600A	
Connection mode	Horizontal	Vertical	Horizontal	Vertical	Horizontal	Vertical	Horizontal	Vertical	Horizontal	Vertical	Horizontal	Vertical
40°	-	-	-	-	-	-	-	-	-	-	-	-
45°	-	-	-	-	-	-	-	-	-	-	-	-
50°	-	-	-	-	-	-	-	-	-	-	1550	1600
55°	-	-	-	-	-	-	-	-	1150	1200	1500	1550
60°	-	-	550	580	-	-	-	-	1050	1100	1450	1500

2000A frame

Ambient temperature	630A		800A		1000A		1250A		1600A		2000A	
Connection mode	Horizontal	Vertical	Horizontal	Vertical	Horizontal	Vertical	Horizontal	Vertical	Horizontal	Vertical	Horizontal	Vertical
40°	-	-	-	-	-	-	-	-	-	-	-	-
45°	-	-	-	-	-	-	-	-	1550	-	1900	-
50°	-	-	-	-	-	-	-	-	1500	1550	1850	1900
55°	-	-	-	-	-	-	-	-	1400	1450	1800	1800
60°	-	-	-	-	-	-	-	-	1300	1350	1700	1700

3200A frame

Ambient temperature	1600A		2000A		2500A		3200A	
Connection mode	Horizontal	Vertical	Horizontal	Vertical	Horizontal	Vertical	Horizontal	Vertical
40°	-	-	-	-	-	-	-	-
45°	-	-	-	-	-	-	-	-
50°	-	-	-	-	-	-	3100	-
55°	-	-	-	-	2450	-	3000	3050
60°	-	-	-	-	2350	2400	2900	2950

4000A frame

Ambient temperature	3200A		3600A		4000A	
Connection mode	Horizontal	Vertical	Horizontal	Vertical	Horizontal	Vertical
40°	-	-	-	-	-	-
45°	3100	-	-	-	3800	3850
50°	3000	-	-	-	3600	3650
55°	3000	3050	3400	3450	3400	3450
60°	2900	2900	3200	3250	3200	3250

6300A frame

Ambient temperature	4000A		5000A		6300A	
Connection mode	Horizontal	Vertical	Horizontal	Vertical	Horizontal	Vertical
40°	-	-	-	-	-	-
45°	-	-	-	-	-	-
50°	-	-	-	-	5600	5650
55°	-	-	4800	4850	5400	5450
60°	-	-	4800	4850	5200	5250

Note: "-" refers to no capacity derating.

«Электро-Профи» - www.ep.ru

Temperature capacity derating table of the draw-out type circuit breaker

1600A frame

Ambient temperature	400A		630A		800A		1000A		1250A		1600A	
Connection mode	Horizontal	Vertical	Horizontal	Vertical	Horizontal	Vertical	Horizontal	Vertical	Horizontal	Vertical	Horizontal	Vertical
40°	-	-	-	-	-	-	-	-	-	-	-	-
45°	-	-	-	-	-	-	-	-	-	-	1550	-
50°	-	-	-	-	-	-	-	-	1150	1200	1500	1550
55°	-	-	550	580	-	-	-	-	1050	1100	1450	1500
60°	-	-	500	530	-	-	950	-	950	1000	1400	1450

2000A frame

Ambient temperature	630A		800A		1000A		1250A		1600A		2000A	
Connection mode	Horizontal	Vertical	Horizontal	Vertical	Horizontal	Vertical	Horizontal	Vertical	Horizontal	Vertical	Horizontal	Vertical
40°	-	-	-	-	-	-	-	-	-	-	-	-
45°	-	-	-	-	-	-	-	-	1500	-	1850	1900
50°	-	-	-	-	-	-	-	-	1400	1500	1750	1850
55°	-	-	-	-	-	-	-	-	1300	1400	1650	1750
60°	600	-	-	-	-	-	1200	-	1200	1300	1550	1650

3200A frame

Ambient temperature	1600A		2000A		2500A		3200A	
Connection mode	Horizontal	Vertical	Horizontal	Vertical	Horizontal	Vertical	Horizontal	Vertical
40°	-	-	-	-	-	-	-	-
45°	-	-	-	-	2450	-	3100	-
50°	-	-	-	-	2400	2450	3000	3100
55°	-	-	-	-	2350	2400	2900	3000
60°	-	-	-	-	2300	2350	2800	2900

4000A frame

Ambient temperature	3200A		3600A		4000A	
Connection mode	Horizontal	Vertical	Horizontal	Vertical	Horizontal	Vertical
40°	-	-	-	-	-	-
45°	3100	-	-	-	3800	3850
50°	3000	3100	-	-	3600	3650
55°	2900	3000	3400	3450	3400	3450
60°	2800	2900	3200	3250	3200	3250

6300A frame

Ambient temperature	4000A		5000A		6300A	
Connection mode	Horizontal	Vertical	Horizontal	Vertical	Horizontal	Vertical
40°	-	-	-	-	-	-
45°	-	-	-	-	-	-
50°	-	-	-	-	5600	5650
55°	-	-	4800	4850	5400	5450
60°	-	-	4800	4850	5200	5250

Note: "-" refers to no capacity derating.

«Электро-Профи» - www.ep.ru

Altitude capacity derating factor

Altitude height (m)		2000	3000	4000	5000
Rated impulse withstand voltage (kV)	Uimp	12	10	8.57	7.5
Average insulation grade (V)	Ui	1000	833	714	625
Maximal operational voltage (V) 50/60HZ	Ue	690	580	500	415
Average heat operational current(40)℃		1.0	0.88	0.78	contact with factory

Power loss and input and output resistance

Power loss is the power loss of each pole measured at In, 50/60Hz. The input/output resistance is the DC resistance value of each pole at the cold state.

Frame size	Rated current (A)	Draw-out type		Fixed type (W)	
		Power loss (W)	Input/output resistance (μohm)	Power loss (W)	Input/output resistance (μohm)
1600A	400	30.5	63.6	15.6	32.4
	630	75.7	63.6	38.6	32.4
	800	99.1	51.6	54.1	28.2
	1000	154.8	51.6	84.6	28.2
	1250	241.9	51.6	132.2	28.2
	1600	262.7	34.2	138.2	18.0
2000A	630	58.6	49.2	26.4	22.2
	800	73.7	38.4	36.6	19.1
	1000	115.2	38.4	57.2	19.1
	1250	180	38.4	89.4	19.1
	1600	294.9	38.4	146.5	19.1
	2000	388.8	32.4	204.5	17.0
3200A	1600	127.2	16.6	60.1	7.8
	2000	198.7	16.6	93.9	7.8
	2500	310.5	16.6	146.7	7.8
	3200	479.2	15.6	206.4	6.8
4000A	3200	435	14.1	239.6	7.8
	3600	690.5	17.7	272.9	7.0
	4000	852.5	17.7	337	7.0
6300A	4000	403.2	9.0	230.4	7.0
	5000	630	9.0	360	7.0
	6300	1000.2	8.8	571	6.4

«Электро-Профи» - www.ep.ru

Dimension of busbar

Bolt configuration

Type of bolt	Application	Fastening busbar
16: M10	Fastening busbar	(49~59)N·m
20~63: M12	Fastening busbar	(86~103)N·m
16~63 : M3	Fastening secondary connector	(0.5~0.7)N.m

Hole size and installation twisting moment of busbar

DrillingΦ (mm)	Diameter of bolt	Fastening twisting moment
16:Φ11	M10	(49~59)N·m
20~63:Φ13	M12	(86~103)N·m

Connection busbar specification reference under different temperature

Maximum permissible temperature of busbar: 100℃
The material of busbar is bare copper

Frame size	Rated current (A)	Ambient temperature(-5~40)°C				Ambient temperature 50°C				Ambient temperature 60°C			
		5mm thick busbar		10mm thick busbar		5mm thick busbar		10mm thick busbar		5mm thick busbar		10mm thick busbar	
		Number of pieces	Specification	Number of pieces	Specification	Number of pieces	Specification	Number of pieces	Specification	Number of pieces	Specification	Number of pieces	Specification
1600A	400	2	30*5	1	30*10	2	30*5	1	30*10	2	30*5	1	30*10
	630	2	40*5	1	40*10	2	40*5	1	40*10	2	40*5	1	40*10
	800	2	50*5	1	50*10	2	50*5	1	50*10	2	50*5	1	50*10
	1000	3	50*5	2	40*10	3	50*5	2	40*10	3	50*5	2	40*10
	1250	4	40*5	2	40*10	4	50*5	2	50*10	4	50*5	2	50*10
	1600	4	50*5	2	50*10	4	50*5	2	50*10	4	50*5	2	50*10
2000A	630	2	40*5	1	40*10	2	50*5	1	50*10	2	60*5	1	60*10
	800	2	50*5	1	50*10	2	50*5	1	50*10	2	60*5	1	60*10
	1000	3	50*5	2	40*10	3	50*5	2	40*10	3	60*5	2	50*10
	1250	3	60*5	2	50*10	3	60*5	2	50*10	3	60*5	2	50*10
	1600	4	60*5	2	60*10	4	60*5	2	60*10	4	60*5	2	60*10
	2000	6	60*5	3	60*10	6	60*5	3	60*10	6	60*5	3	60*10
3200A	1600	2	100*5	1	100*10	2	100*5	1	100*10	2	100*5	1	100*10
	2000	4	100*5	2	100*10	4	100*5	2	100*10	4	100*5	2	100*10
	2500	4	100*5	2	100*10	4	100*5	2	100*10	4	100*5	2	100*10
	3200	8	100*5	4	100*10	8	100*5	4	100*10	8	100*5	4	100*10
4000A	3200	8	100*5	4	100*10	8	100*5	4	100*10	8	100*5	4	100*10
	3600	7	120*5	3	120*12	7	120*5	3	120*12	7	120*5	3	120*12
	4000	8	120*5	4	120*10	8	125*5	4	125*10	8	125*5	4	125*10
6300A	4000	12	100*5	6	100*10	12	100*5	6	100*10	14	100*5	7	100*10
	5000	14	100*5	7	100*10	14	100*5	7	100*10	16	100*5	8	100*10
	6300	16	100*5	8	100*10	16	100*5	8	100*10	18	100*5	9	100*10

Note:

a. When a copper bar selected by users is not matched with a wiring terminal of the circuit breaker, extended busbar is required to be designed to transfer, and is designed by the users of their own. The cross section of the extended busbar cannot be less than the requirement in the table above. The interval among the extended busbar is not less than the interval among wiring terminals of the circuit breaker.

b. After the busbar recommended in the table above is installed, the electric clearance between adjacent phases of the circuit breaker is not less than 18mm.

c. Electrical elements are used for three-phase rectification and high-frequency inversion, such as a high-frequency induction heating furnace (medium-frequency furnace steelmaking equipment), a solid high-frequency welding machine (such as an embedded arc electric welding machine), vacuum heating smelting equipment (such as a monocrystalline silicon growth furnace), in load equipment by controlled silicon. When a circuit breaker is selected, the influence on the circuit breaker by higher order harmonic component generated by controlled silicon is required to be considered besides the influences by the environment temperature and altitude height. At the same time, capacity derating is required, and the capacity coefficient (0.5-0.8) is recommended.

d. The electric clearance of fastening bolts of upper and lower busbar needs to be not less than 20mm after the installation of the busbar by users.

e. After the installation of the circuit breaker, the safety clearance among electrified bodies with different electric potential and between the electrified bodies and the ground are not less than 18mm.

«Электро-Профи» - www.ep.ru

Selective protection between NM8 and NXA

Selective protection between NM8 and NXA			Upstream	Frame size rated current	NXA16						NXA20	
Downstream				Rated current (A)	400	630	800	1000	1250	1600	630	800
				Default setting ratings of short time-delay 8In (kA)	3.2	5.04	6.4	8	10	12.8	5.04	6.4
				Setting ratings (kA)	0.8～4	1.26～6.3	1.6～8	2～10	2.5～12.5	3.2～16	1.26～6.3	1.6～8
				Delayed tripping time (s)	0.1 , 0.2 , 0.3 , 0.4							
				Returnable time	0.05 , 0.14 , 0.25 , 0.33							
Frame size rated current	Rated current (A)	Instantaneous setting ratings (kA)										
NM8-100 NM8S-100	16	0.16			0.8～4	1.26～6.3	1.6～8	2～10	2.5～12.5	3.2～16	1.26～6.3	1.6～8
		0.19 (Motor)			0.8～4	1.26～6.3	1.6～8	2～10	2.5～12.5	3.2～16	1.26～6.3	1.6～8
	20	0.2			0.8～4	1.26～6.3	1.6～8	2～10	2.5～12.5	3.2～16	1.26～6.3	1.6～8
		0.24 (Motor)			0.8～4	1.26～6.3	1.6～8	2～10	2.5～12.5	3.2～16	1.26～6.3	1.6～8
	25	0.25			0.8～4	1.26～6.3	1.6～8	2～10	2.5～12.5	3.2～16	1.26～6.3	1.6～8
		0.30 (Motor)			0.8～4	1.26～6.3	1.6～8	2～10	2.5～12.5	3.2～16	1.26～6.3	1.6～8
	32	0.32			0.8～4	1.26～6.3	1.6～8	2～10	2.5～12.5	3.2～16	1.26～6.3	1.6～8
		0.38 (Motor)			0.8～4	1.26～6.3	1.6～8	2～10	2.5～12.5	3.2～16	1.26～6.3	1.6～8
	40	0.4			0.8～4	1.26～6.3	1.6～8	2～10	2.5～12.5	3.2～16	1.26～6.3	1.6～8
		0.48 (Motor)			0.8～4	1.26～6.3	1.6～8	2～10	2.5～12.5	3.2～16	1.26～6.3	1.6～8
	50	0.5			0.8～4	1.26～6.3	1.6～8	2～10	2.5～12.5	3.2～16	1.26～6.3	1.6～8
		0.60 (Motor)			0.828～4	1.26～6.3	1.6～8	2～10	2.5～12.5	3.2～16	1.26～6.3	1.6～8
	63	0.63			0.869～4	1.26～6.3	1.6～8	2～10	2.5～12.5	3.2～16	1.26～6.3	1.6～8
		0.75 (Motor)			1.035～4	1.26～6.3	1.6～8	2～10	2.5～12.5	3.2～16	1.26～6.3	1.6～8
	80	0.8			1.104～4	1.26～6.3	1.6～8	2～10	2.5～12.5	3.2～16	1.26～6.3	1.6～8
		0.96 (Motor)			1.325～4	1.324～6.3	1.6～8	2～10	2.5～12.5	3.2～16	1.324～6.3	1.6～8
	100	1			1.380～4	1.380～6.3	1.6～8	2～10	2.5～12.5	3.2～16	1.380～6.3	1.6～8
		1.20 (Motor)			1.656～4	1.656～6.3	1.656～8	2～10	2.5～12.5	3.2～16	1.656～6.3	1.656～8
NM8-250 NM8S-250	100	1			1.380～4	1.380～6.3	1.6～8	2～10	2.5～12.5	3.2～16	1.380～6.3	1.6～8
		1.20 (Motor)			1.656～4	1.656～6.3	1.656～8	2～10	2.5～12.5	3.2～16	1.656～6.3	1.656～8
	125	1.25			1.725～4	1.725～6.3	1.725～8	2～10	2.5～12.5	3.2～16	1.725～6.3	1.725～8
		1.5 (Motor)			2.070～4	2.070～6.3	2.070～8	2.070～10	2.5～12.5	3.2～16	2.070～6.3	2.070～8
	160	1.6			2.208～4	2.208～6.3	2.208～8	2.208～10	2.5～12.5	3.2～16	2.208～6.3	2.208～8
		1.92 (Motor)			2.650～4	2.649～6.3	2.649～8	2.649～10	2.649～12.5	3.2～16	2.649～6.3	2.649～8
	180	1.8			2.484～4	2.484～6.3	2.484～8	2.484～10	2.500～12.5	3.2～16	2.484～6.3	2.484～8
		2.16 (Motor)			2.981～4	2.980～6.3	2.980～8	2.980～10	2.980～12.5	3.2～16	2.980～6.3	2.980～8
	200	2			2.760～4	2.760～6.3	2.760～8	2.760～10	2.760～12.5	3.2～16	2.760～6.3	2.760～8
		2.4 (Motor)			3.312～4	3.312～6.3	3.312～8	3.312～10	3.312～12.5	3.312 ～16	3.312～6.3	3.312～8
	225	2.25			3.105～4	3.105～6.3	3.105～8	3.105～10	3.105～12.5	3.200～16	3.105～6.3	3.105～8
		2.7 (Motor)			3.726～4	3.726～6.3	3.726～8	3.726～10	3.726～12.5	3.720～16	3.726～6.3	3.726～8
	250	2.5			3.450～4	3.450～6.3	3.450～8	3.450～10	3.450～12.5	3.450～16	3.450～6.3	3.450～8
		3.0 (Motor)			/	4.140～6.3	4.140～8	4.140～10	4.140～12.5	4.140～16	4.140～6.3	4.140～8
NM8-630 NM8S-630	250	2.5			3.450～4	3.450～6.3	3.450～8	3.450～10	3.450～12.5	3.450～16	3.450～6.3	3.450～8
		3.0 (Motor)			/	4.140～6.3	4.140～8	4.140～10	4.140～12.5	4.140～16	4.140～6.3	4.140～8
	315	3.15			/	4.347～6.3	4.347～8	4.347～10	4.347～12.5	4.347～16	4.347～6.3	4.347～8
		3.78 (Motor)			/	5.216～6.3	5.216～8	5.216～10	5.216～12.5	5.216～16	5.216～6.3	5.216～8
	350	3.5			/	4.830～6.3	4.830～8	4.830～10	4.830～12.5	4.830～16	4.830～6.3	4.830～8
		4.2 (Motor)			/	5.796～6.3	5.796～8	5.796～10	5.796～12.5	5.796～16	5.796～6.3	5.796～8
	400	4			/	5.520～6.3	5.520～8	5.520～10	5.520～12.5	5.520～16	5.520～6.3	5.520～8
		4.8 (Motor)			/	/	6.624～8	6.624～10	6.624～12.5	6.624～16	/	6.624～8
	500	5			/	/	6.900～8	6.900～10	6.900～12.5	6.900～16	/	6.900～8
		6.0 (Motor)			/	/	/	8.280～10	8.280～12.5	8.280～16	/	/
NM8-1250 NM8S-1250	630	6.3			/	/	/	8.694～10	8.694～12.5	8.694～16	/	/
		7.56 (Motor)			/	/	/	/	10.43～12.5	10.43～16	/	/
	700	7			/	/	/	9.660～10	9.660～12.5	9.660～16	/	/
		8.4 (Motor)			/	/	/	/	11.59～12.5	11.59～16	/	/
	800	8			/	/	/	/	11.04～12.5	11.04～16	/	/
		9.6 (Motor)			/	/	/	/	/	13.24～16	/	/
	1000	10			/	/	/	/	/	13.80～16	/	/
		12 (Motor)			/	/	/	/	/	/	/	/
	1250	12.5			/	/	/	/	/	/	/	/
		15.0 (Motor)			/	/	/	/	/	/	/	/

«Электро-Профи» - www.ep.ru

	NXA20				NXA32				NXA40			NXA63		
	1000	1250	1600	2000	1600	2000	2500	3200	3200	3600	4000	4000	5000	6300
	8	10	12.8	16	12.8	16	20	25.6	25.6	28.8	32	32	40	50
	2~10	2.5~12.5	3.2~16	4~20	3.2~16	4~20	5~25	6.4~32	6.4~32	7.2~36	8~40	8~40	10~50	12.6~50
	2~10	2.5~12.5	3.2~16	4~20	3.2~16	4~20	5~25	6.4~32	6.4~32	7.2~36	8~40	8~40	10~50	12.6~50
	2~10	2.5~12.5	3.2~16	4~20	3.2~16	4~20	5~25	6.4~32	6.4~32	7.2~36	8~40	8~40	10~50	12.6~50
	2~10	2.5~12.5	3.2~16	4~20	3.2~16	4~20	5~25	6.4~32	6.4~32	7.2~36	8~40	8~40	10~50	12.6~50
	2~10	2.5~12.5	3.2~16	4~20	3.2~16	4~20	5~25	6.4~32	6.4~32	7.2~36	8~40	8~40	10~50	12.6~50
	2~10	2.5~12.5	3.2~16	4~20	3.2~16	4~20	5~25	6.4~32	6.4~32	7.2~36	8~40	8~40	10~50	12.6~50
	2~10	2.5~12.5	3.2~16	4~20	3.2~16	4~20	5~25	6.4~32	6.4~32	7.2~36	8~40	8~40	10~50	12.6~50
	2~10	2.5~12.5	3.2~16	4~20	3.2~16	4~20	5~25	6.4~32	6.4~32	7.2~36	8~40	8~40	10~50	12.6~50
	2~10	2.5~12.5	3.2~16	4~20	3.2~16	4~20	5~25	6.4~32	6.4~32	7.2~36	8~40	8~40	10~50	12.6~50
	2~10	2.5~12.5	3.2~16	4~20	3.2~16	4~20	5~25	6.4~32	6.4~32	7.2~36	8~40	8~40	10~50	12.6~50
	2~10	2.5~12.5	3.2~16	4~20	3.2~16	4~20	5~25	6.4~32	6.4~32	7.2~36	8~40	8~40	10~50	12.6~50
	2~10	2.5~12.5	3.2~16	4~20	3.2~16	4~20	5~25	6.4~32	6.4~32	7.2~36	8~40	8~40	10~50	12.6~50
	2~10	2.5~12.5	3.2~16	4~20	3.2~16	4~20	5~25	6.4~32	6.4~32	7.2~36	8~40	8~40	10~50	12.6~50
	2~10	2.5~12.5	3.2~16	4~20	3.2~16	4~20	5~25	6.4~32	6.4~32	7.2~36	8~40	8~40	10~50	12.6~50
	2~10	2.5~12.5	3.2~16	4~20	3.2~16	4~20	5~25	6.4~32	6.4~32	7.2~36	8~40	8~40	10~50	12.6~50
	2~10	2.5~12.5	3.2~16	4~20	3.2~16	4~20	5~25	6.4~32	6.4~32	7.2~36	8~40	8~40	10~50	12.6~50
	2~10	2.5~12.5	3.2~16	4~20	3.2~16	4~20	5~25	6.4~32	6.4~32	7.2~36	8~40	8~40	10~50	12.6~50
	2~10	2.5~12.5	3.2~16	4~20	3.2~16	4~20	5~25	6.4~32	6.4~32	7.2~36	8~40	8~40	10~50	12.6~50
	2~10	2.5~12.5	3.2~16	4~20	3.2~16	4~20	5~25	6.4~32	6.4~32	7.2~36	8~40	8~40	10~50	12.6~50
	2~10	2.5~12.5	3.2~16	4~20	3.2~16	4~20	5~25	6.4~32	6.4~32	7.2~36	8~40	8~40	10~50	12.6~50
	2~10	2.5~12.5	3.2~16	4~20	3.2~16	4~20	5~25	6.4~32	6.4~32	7.2~36	8~40	8~40	10~50	12.6~50
	2~10	2.5~12.5	3.2~16	4~20	3.2~16	4~20	5~25	6.4~32	6.4~32	7.2~36	8~40	8~40	10~50	12.6~50
	2.070~10	2.5~12.5	3.2~16	4~20	3.2~16	4~20	5~25	6.4~32	6.4~32	7.2~36	8~40	8~40	10~50	12.6~50
	2.208~10	2.5~12.5	3.2~16	4~20	3.2~16	4~20	5~25	6.4~32	6.4~32	7.2~36	8~40	8~40	10~50	12.6~50
	2.649~10	2.649~12.5	3.2~16	4~20	3.2~16	4~20	5~25	6.4~32	6.4~32	7.2~36	8~40	8~40	10~50	12.6~50
	2.484~10	2.5~12.5	3.2~16	4~20	3.2~16	4~20	5~25	6.4~32	6.4~32	7.2~36	8~40	8~40	10~50	12.6~50
	2.980~10	2.980~12.5	3.2~16	4~20	3.2~16	4~20	5~25	6.4~32	6.4~32	7.2~36	8~40	8~40	10~50	12.6~50
	2.760~10	2.760~12.5	3.2~16	4~20	3.2~16	4~20	5~25	6.4~32	6.4~32	7.2~36	8~40	8~40	10~50	12.6~50
	3.312~10	3.312~12.5	3.312~16	4~20	3.312~16	4~20	5~25	6.4~32	6.4~32	7.2~36	8~40	8~40	10~50	12.6~50
	3.105~10	3.105~12.5	3.2~16	4~20	3.2~16	4~20	5~25	6.4~32	6.4~32	7.2~36	8~40	8~40	10~50	12.6~50
	3.726~10	3.726~12.5	3.726~16	4~20	3.726~16	4~20	5~25	6.4~32	6.4~32	7.2~36	8~40	8~40	10~50	12.6~50
	3.450~10	3.450~12.5	3.450~16	4~20	3.450~16	4~20	5~25	6.4~32	6.4~32	7.2~36	8~40	8~40	10~50	12.6~50
	4.140~10	4.140~12.5	4.140~16	4.140~20	4.140~16	4.140~20	5~25	6.4~32	6.4~32	7.2~36	8~40	8~40	10~50	12.6~50
	3.450~10	3.450~12.5	3.450~16	4~20	3.450~16	4~20	5~25	6.4~32	6.4~32	7.2~36	8~40	8~40	10~50	12.6~50
	4.140~10	4.140~12.5	4.140~16	4.140~20	4.140~16	4.140~20	5~25	6.4~32	6.4~32	7.2~36	8~40	8~40	10~50	12.6~50
	4.347~10	4.347~12.5	4.347~16	4.347~20	4.347~16	4.347~20	5~25	6.4~32	6.4~32	7.2~36	8~40	8~40	10~50	12.6~50
	5.216~10	5.216~12.5	5.216~16	5.216~20	5.216~16	5.216~20	5.216~25	6.4~32	6.4~32	7.2~36	8~40	8~40	10~50	12.6~50
	4.830~10	4.830~12.5	4.830~16	4.830~20	4.830~16	4.830~20	5~25	6.4~32	6.4~32	7.2~36	8~40	8~40	10~50	12.6~50
	5.796~10	5.796~12.5	5.796~16	5.796~20	5.796~16	5.796~20	5.796~25	6.4~32	6.4~32	7.2~36	8~40	8~40	10~50	12.6~50
	5.520~10	5.520~12.5	5.520~16	5.520~20	5.520~16	5.520~20	5.520~25	6.4~32	6.4~32	7.2~36	8~40	8~40	10~50	12.6~50
	6.624~10	6.624~12.5	6.624~16	6.624~20	6.624~16	6.624~20	6.624~25	6.624~32	6.624~32	7.2~36	8~40	8~40	10~50	12.6~50
	6.900~10	6.900~12.5	6.900~16	6.900~20	6.900~16	6.900~20	6.900~25	6.900~32	6.900~32	7.2~36	8~40	8~40	10~50	12.6~50
	8.280~10	8.280~12.5	8.280~16	8.280~20	8.28~16	8.280~20	8.280~25	8.280~32	8.280~32	8.280~36	8.280~40	8.280~40	10~50	12.6~50
	8.694~10	8.694~12.5	8.694~16	8.694~20	8.694~16	8.694~20	8.694~25	8.694~32	8.694~32	8.694~36	8.694~40	8.694~40	10~50	12.6~50
	/	10.43~12.5	10.43~16	10.43~20	10.43~16	10.43~20	10.43~25	10.43~32	10.43~32	10.43~36	10.43~40	10.43~40	10.43~50	12.6~50
	9.660~10	9.660~12.5	9.660~16	9.660~20	9.660~16	9.660~20	9.660~25	9.660~32	9.660~32	9.660~36	9.660~40	9.660~40	10~50	12.6~50
	/	11.59~12.5	11.59~16	11.59~20	11.59~16	11.59~20	11.59~25	11.59~32	11.59~32	11.59~36	11.59~40	11.59~40	11.59~50	12.6~50
	/	11.04~12.5	11.04~16	11.04~20	11.04~16	11.04~20	11.04~25	11.04~32	11.04~32	11.04~36	11.04~40	11.04~40	11.04~50	12.6~50
	/	/	13.24~16	13.24~20	13.24~16	13.24~20	13.24~25	13.24~32	13.24~32	13.24~36	13.24~40	13.24~40	13.24~50	13.24~50
	/	/	13.80~16	13.80~20	13.80~16	13.80~20	13.80~25	13.80~32	13.80~32	13.80~36	13.80~40	13.80~40	13.80~50	13.8~50
	/	/	/	16.56~20	/	16.56~20	16.56~25	16.56~32	16.56~32	16.56~36	16.56~40	16.56~40	16.56~50	16.56~50
	/	/	/	17.25~20	/	17.25~20	17.25~25	17.25~32	17.25~32	17.25~36	17.25~40	17.25~40	17.25~50	17.25~50
	/	/	/	/	/	/	20.70~25	20.70~32	20.70~32	20.70~36	20.70~40	20.70~40	20.70~50	20.70~50

«Электро-Профи» - www.ep.ru

Dimensions and installation

1600A fixed type

Front view

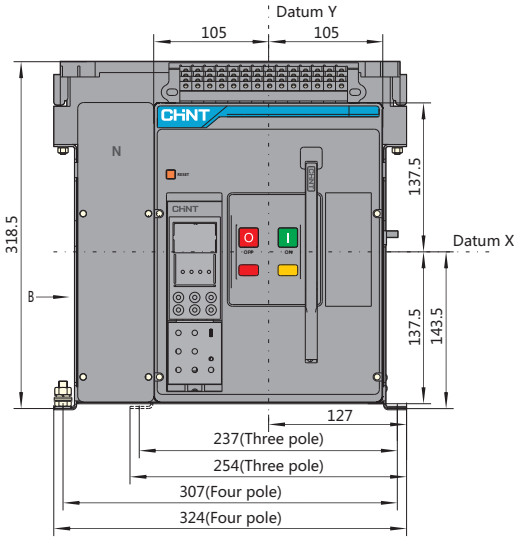

Side view

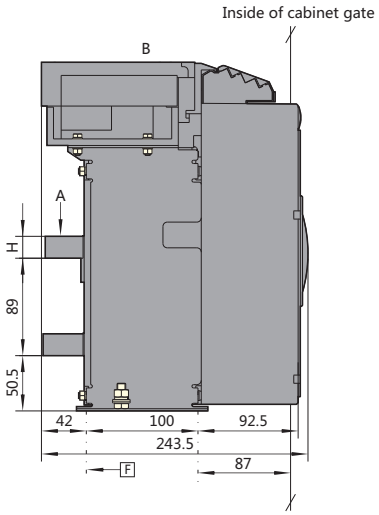

Hole size

Hole size of the base

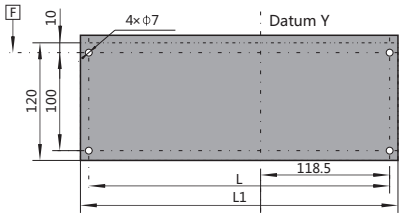

Schematic diagram of the overall size of the bottom surface and the installation hole pitch

H	L	L1	Remark
5	237	254	In=400A~630A Fixed type, three pole
8	237	254	In=800A~1250A Fixed type, three pole
20	237	254	In=1600A Fixed type, three pole
5	307	324	In=400A~630A Fixed type, four pole
8	307	324	In=800A~1250A Fixed type, four pole
20	307	324	In=1600A Fixed type, four pole

Hole size of a panel

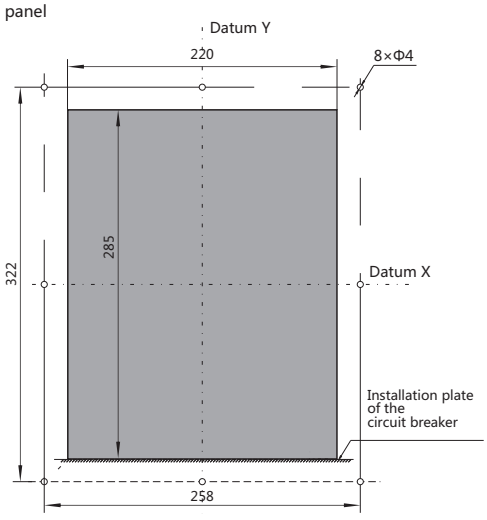

Hole size of the panel of the fixed type circuit breaker

«Электро-Профи» - www.ep.ru

Horizontal connection

Side view

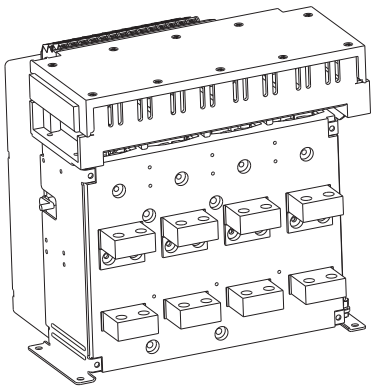

Busbar size and busbar interval

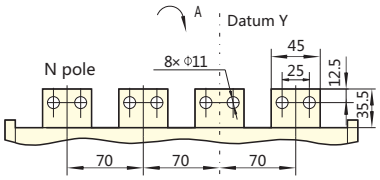

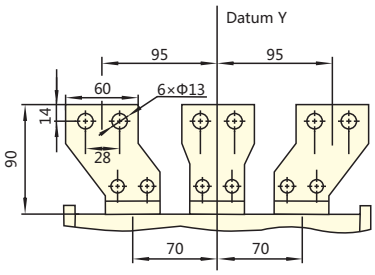

(Optional)

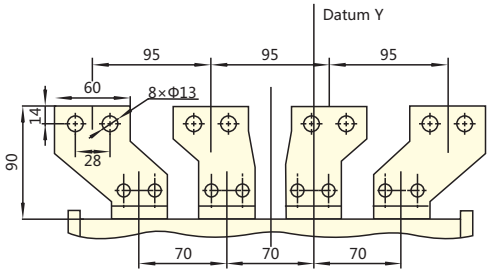

(Optional)

Number of busbar

"Rated current (A) "	Number of pieces			
	Three poles		Four poles	
	A pole+C pole	B pole	A pole+B pole	C pole+N pole
400 ~ 630	4	2	4	4
800 ~ 1250	4	2	4	4
1600	8	4	8	8

«Электро-Профи» - www.ep.ru

1600A draw-out type

Front view

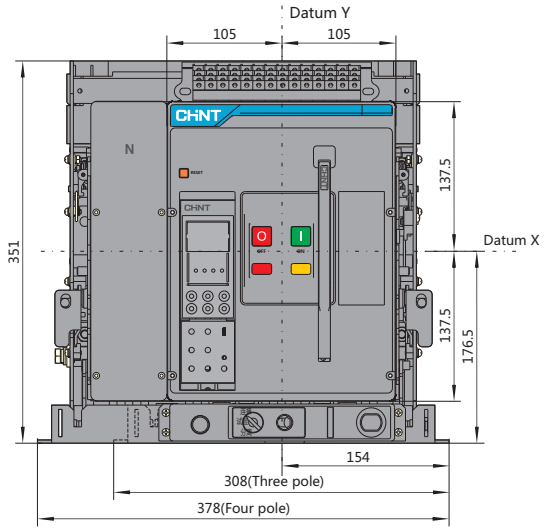

Side view

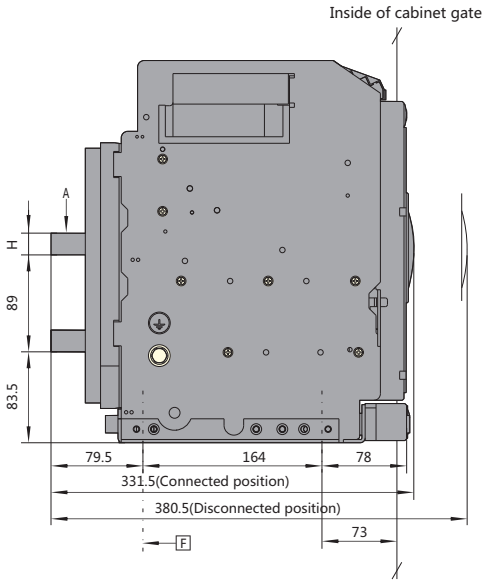

Hole size

Hole size of the base

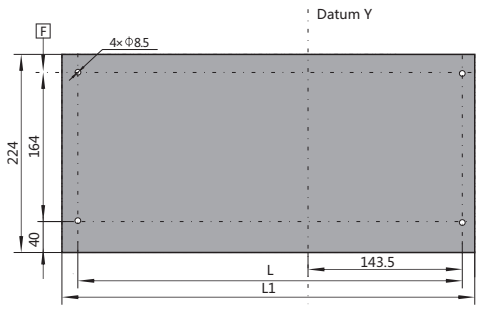

Schematic diagram of the overall size of the bottom surface and the installation hole pitch

H	L	L1	Remark
5	287	308	In=400A~630A Three pole
8	287	308	In=800A~1250A Three pole
20	287	308	In=1600A Three pole
5	357	378	In=400A~630A Four pole
8	357	378	In=800A~1250A Four pole
20	357	378	In=1600A Four pole

Hole size of a panel

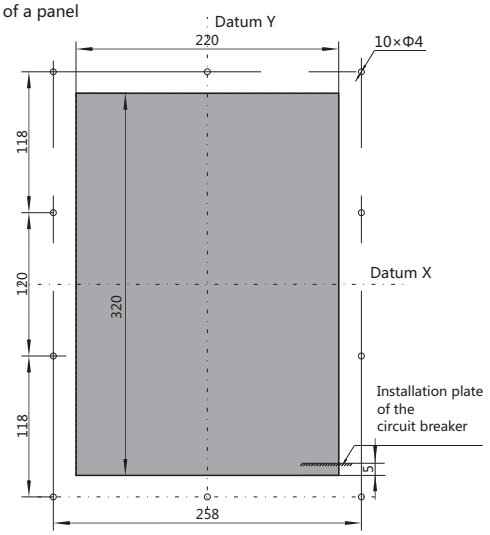

Ratio: 1:1.5 Hole size of a panel of the draw-out type circuit breaker

«Электро-Профи» - www.ep.ru

Horizontal connection

Side view

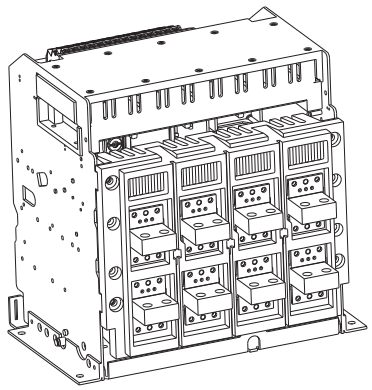

Busbar size and interval

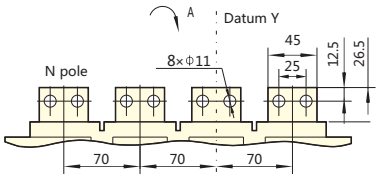

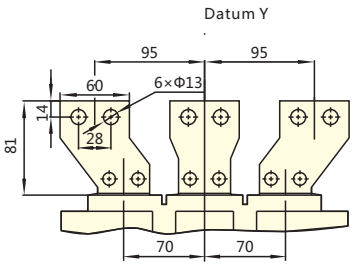

Optional

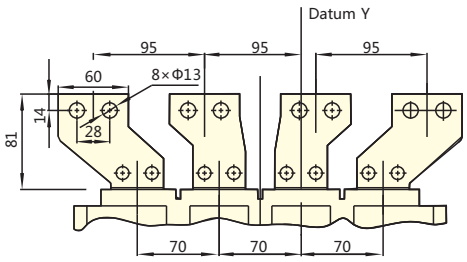

Optional

Number of busbar

"Rated current (A) "	Number of pieces			
	Three poles		Four poles	
	A pole+C pole	B pole	A pole+B pole	C pole+N pole
400 ~ 630	4	2	4	4
800 ~ 1250	4	2	4	4
1600	8	4	8	8

«Электро-Профи» - www.ep.ru

2000A fixed type

Front view

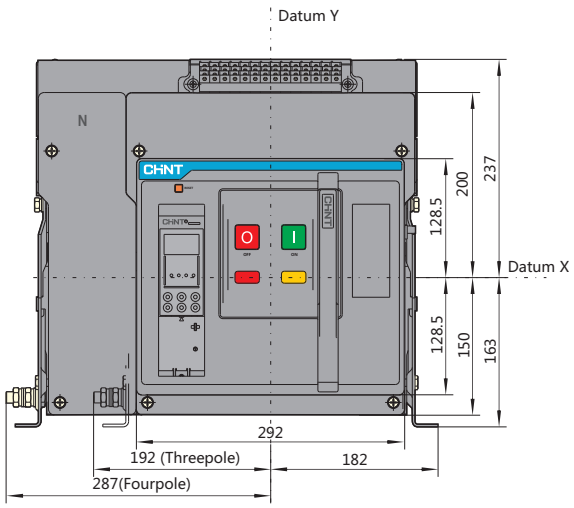

Side view

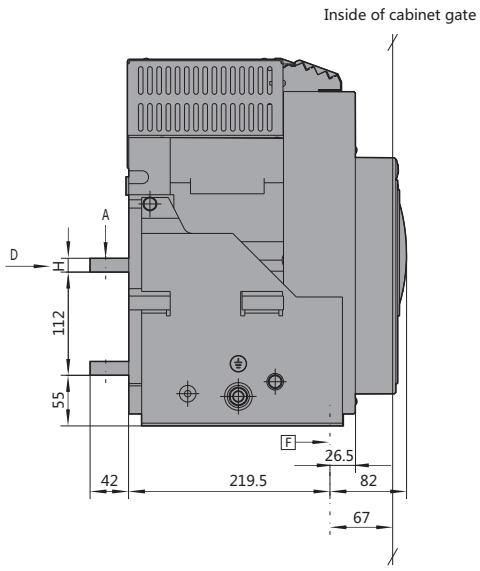

Hole size

Hole size of the base

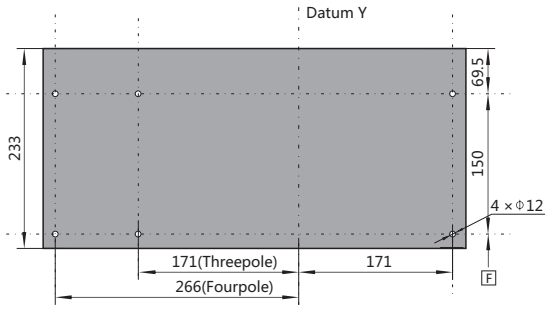

Schematic diagram of the overall size of the bottom surface and the installation hole pitch

H	Remark
10	In=630A
15	In=800A~1600A
20	In=2000A

Hole size of a panel

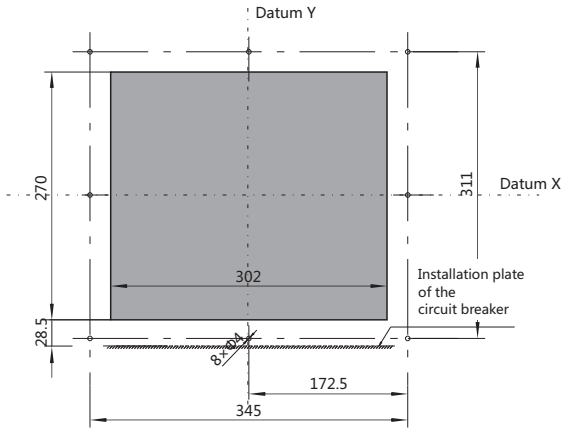

Hole of the panel

«Электро-Профи» - www.ep.ru

Horizontal connection

Side view

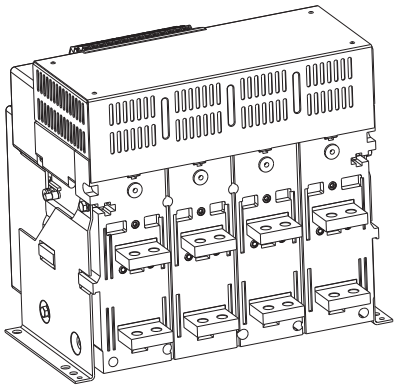

Busbar size and interval

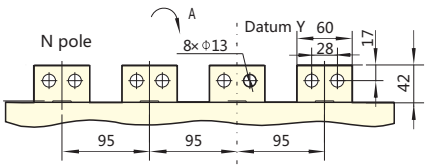

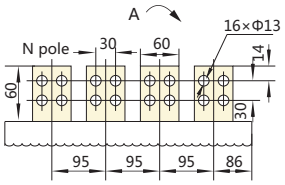

horizontal connection Lengthen busbar

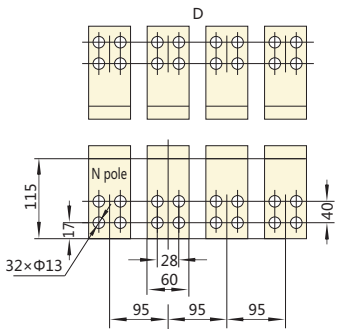

L type vertical connection

«Электро-Профи» - www.ep.ru

2000A draw-out type

Front view

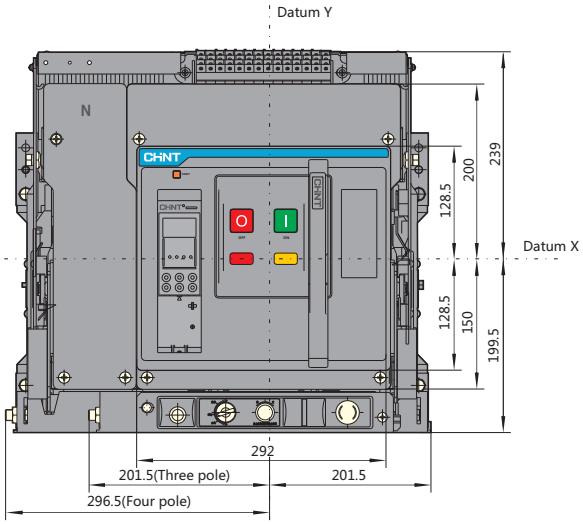

Side view

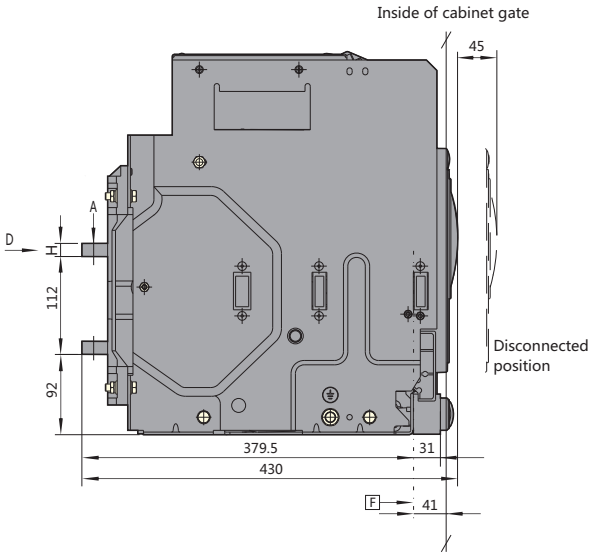

Hole size

Hole size of the base

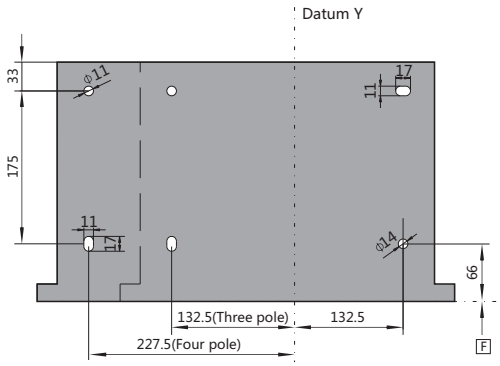

Schematic diagram of the overall size of the bottom surface and the installation hole pitch

H	Remark
10	In=630A
15	In=800A~1600A
20	In=2000A

Hole size of a panel

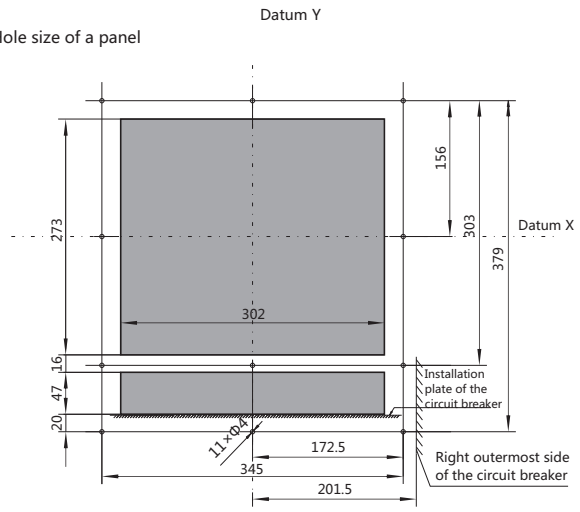

Hole of the panel

«Электро-Профи» - www.ep.ru

Horizontal connection

Side view

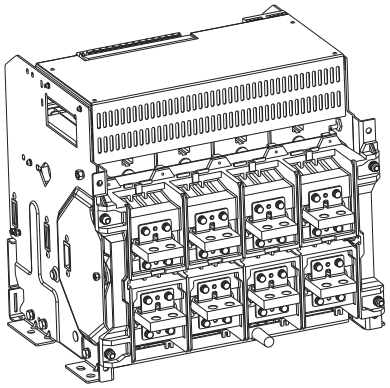

Busbar size and interval

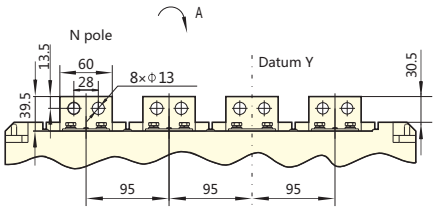

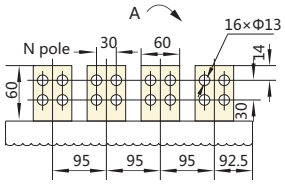

horizontal connection Lengthen busbar

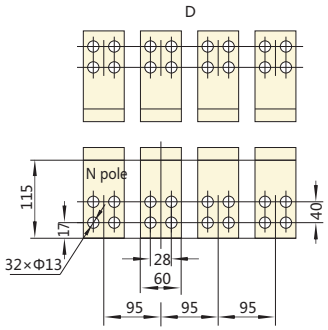

L type vertical connection

«Электро-Профи» - www.ep.ru

3200A fixed type

Front view

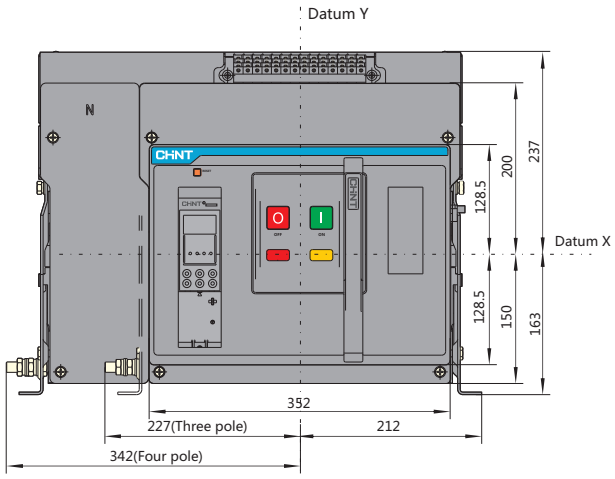

Side view

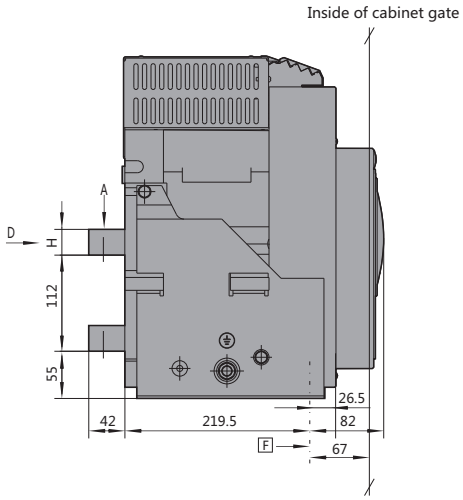

Hole size

Hole size of the base

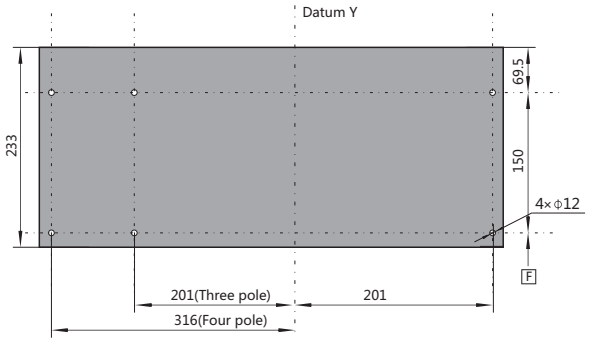

Schematic diagram of the overall size of the bottom surface and the installation hole pitch

Hole of the panel

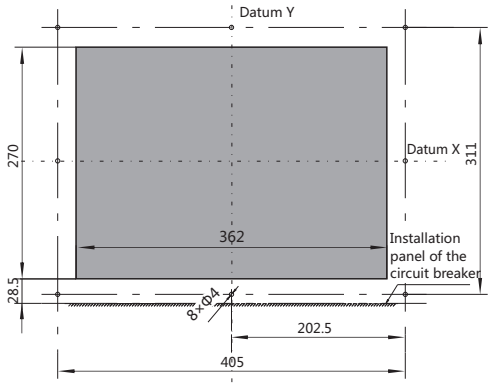

Horizontal connection

H	Remark
20	In=1600A~2500A
30	In=3200A

«Электро-Профи» - www.ep.ru

Horizontal connection

Side view

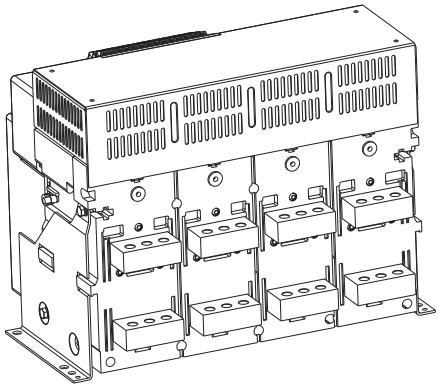

Busbar size and interval

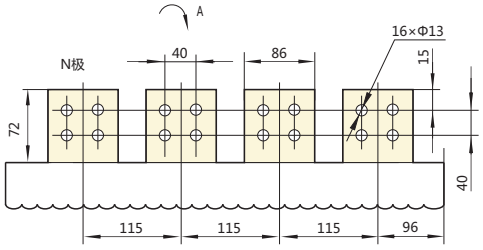

Horizontal onnection (default configuration)

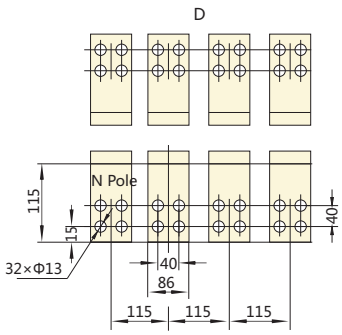

L type vertical connection

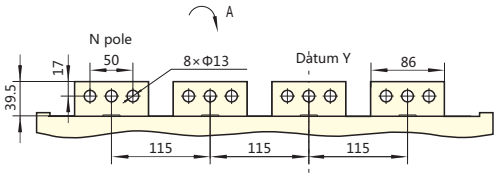

Horizontal short busbar

N

«Электро-Профи» - www.ep.ru

3200A draw-out type(Default configuration)

Front view

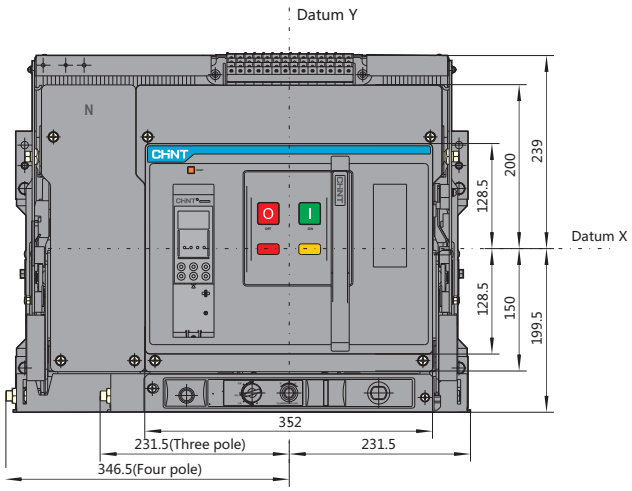

Side view

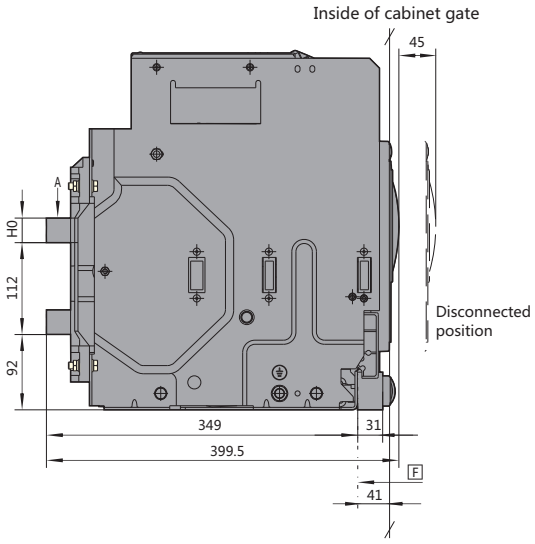

3200A draw-out type(Horizontal short busbar)

Front view

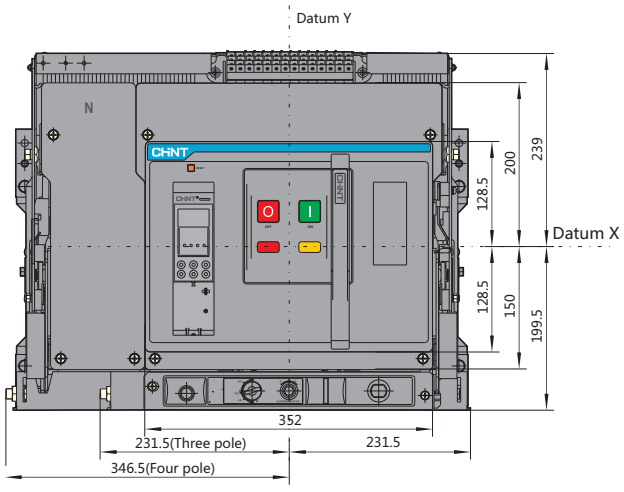

Side view

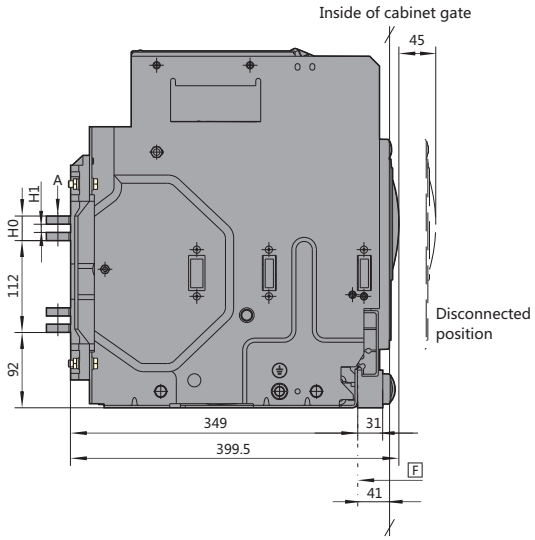

«Электро-Профи» - www.ep.ru

Hole size

Hole size of the base

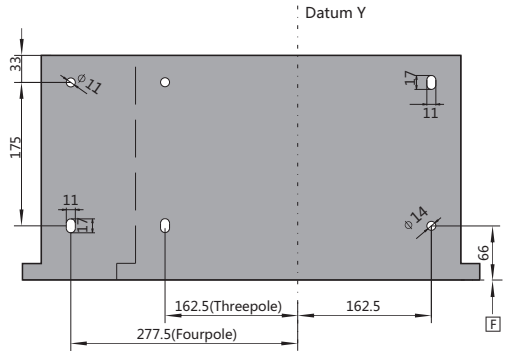

Schematic diagram of the overall size of the bottom surface and the installation hole pitch

Hole size of a panel

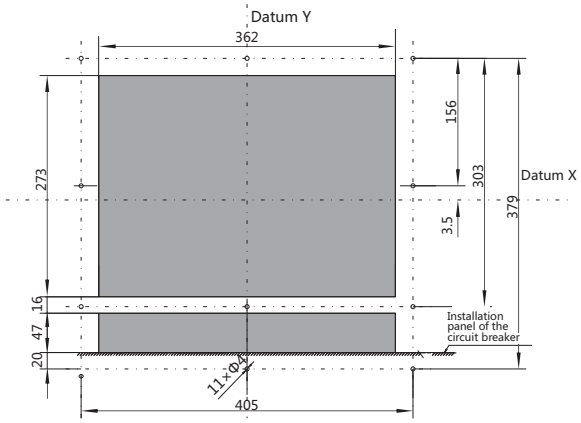

Hole of the panel

H0	H1	Remark
20	0	In=1600A~2500A
30	$10^{+0.1}_{0}$	In=3200A

Horizontal connection

Side view

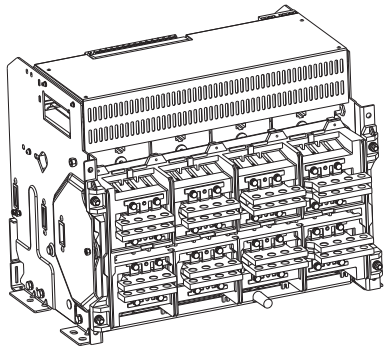

Busbar size and interval

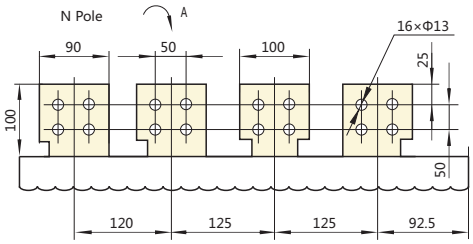

Horizontal connection(Default configuration)

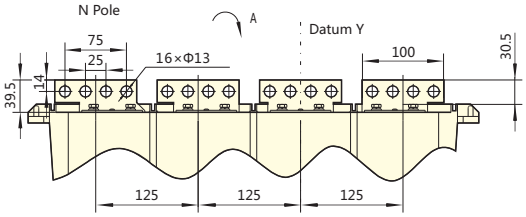

Horizontal short busbar

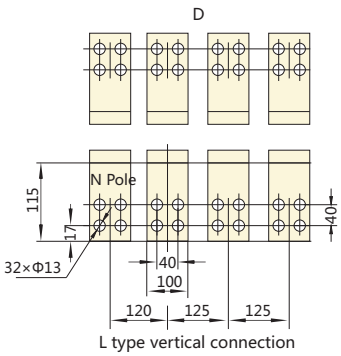

L type vertical connection

«Электро-Профи» - www.ep.ru

4000A fixed type

Front view

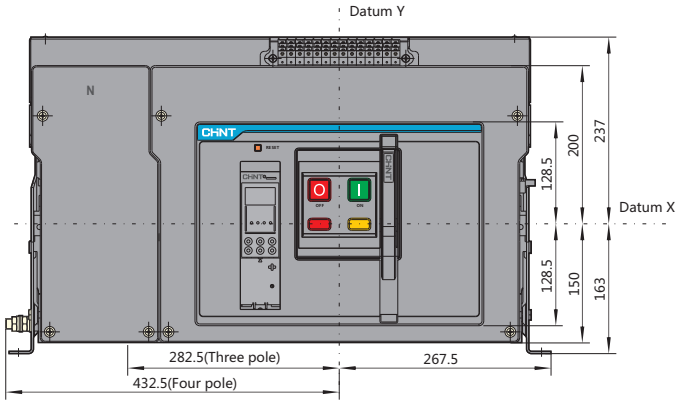

Side view

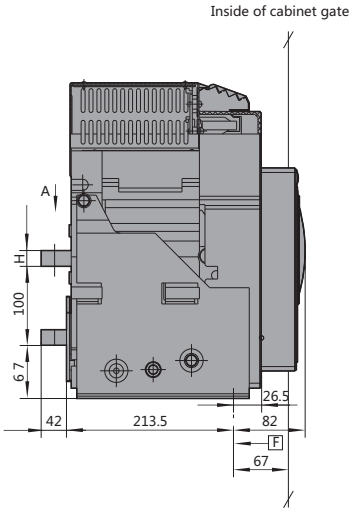

Hole size

Hole size of the base

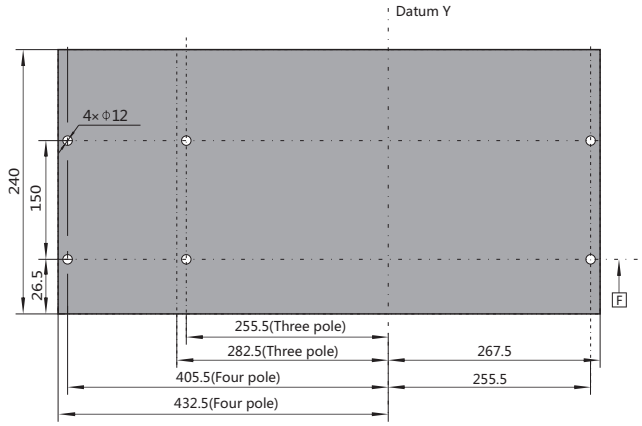

Schematic diagram of the overall size of the bottom surface and the installation hole pitch

Hole size of a panel

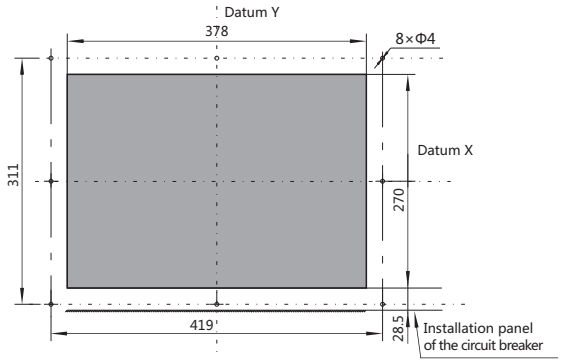

Ratio 1:2 Hole size of the panel of the fixed type circuit breaker

H	Remark
16	In=3200A
20	In=3600A~4000A

«Электро-Профи» - www.ep.ru

Horizontal connection

Side view

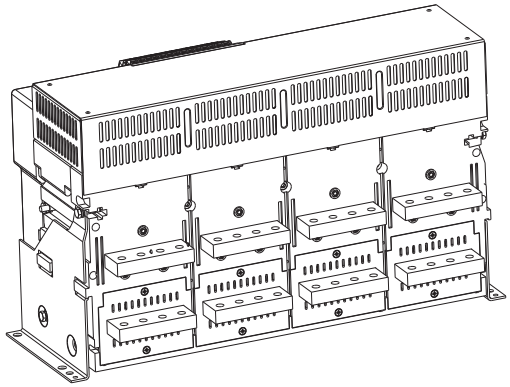

Busbar size and interval

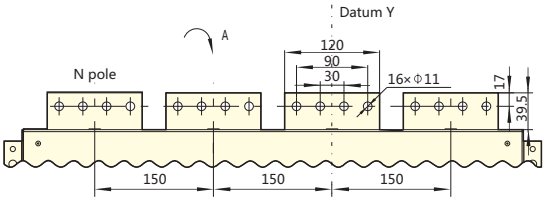

N

«Электро-Профи» - www.ep.ru

4000A draw-out type

Front view

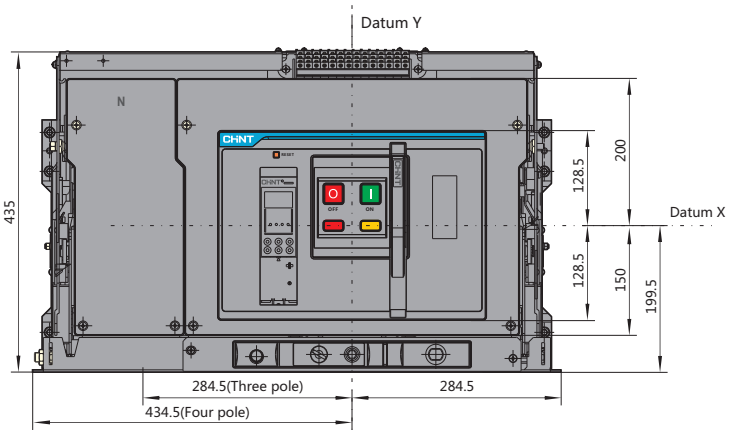

Side view

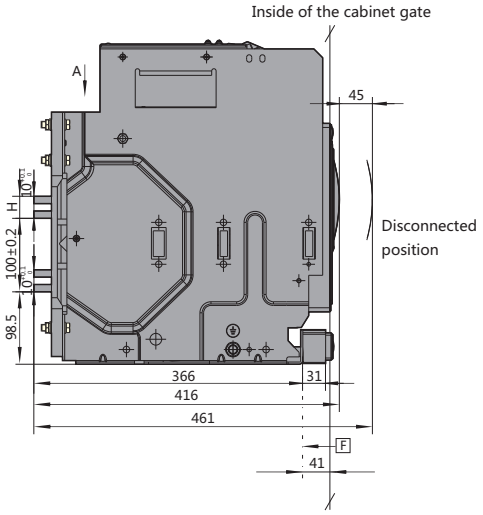

Hole size

Hole size of the base

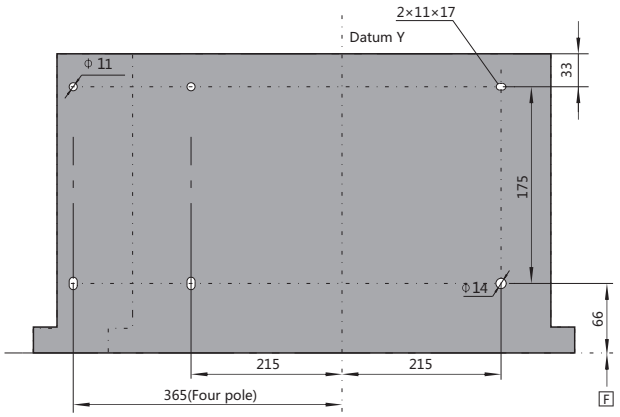

Schematic diagram of the overall size of the bottom surface and the installation hole pitch

H	Remark
26	In=3200A
30	In=3600~4000A

Hole size of a panel

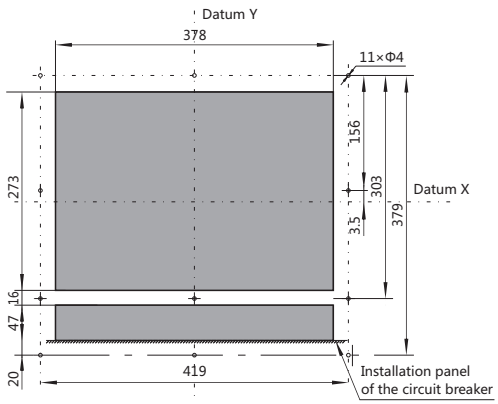

Ratio 1:1 Hole size of the panel of the draw-out type circuit breaker

«Электро-Профи» - www.ep.ru

Horizontal connection

Side view

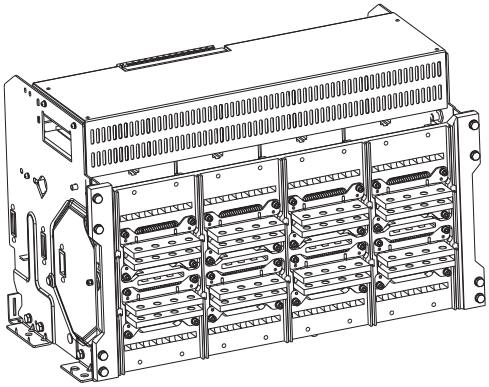

Busbar size and interval

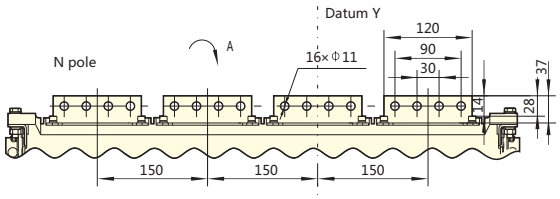

N

«Электро-Профи» - www.ep.ru

6300A fixed type

Front view

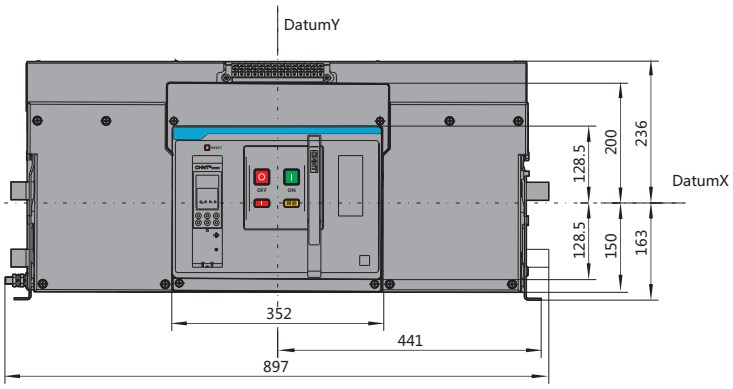

Side view

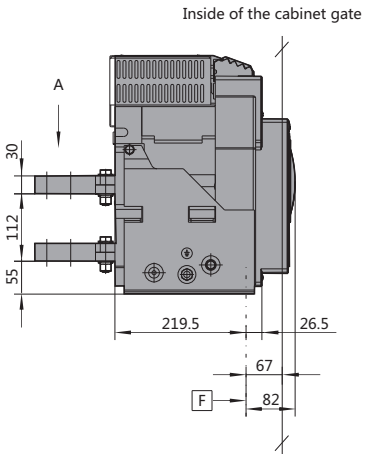

Hole size

Hole size of the base

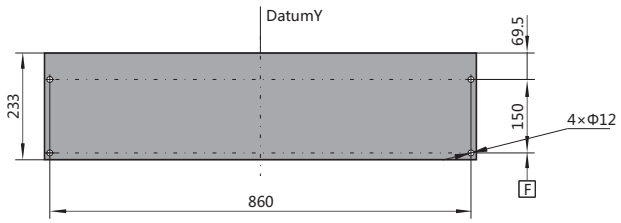

Schematic diagram of the overall size of the bottom surface and the installation hole pitch

Hole size of panel

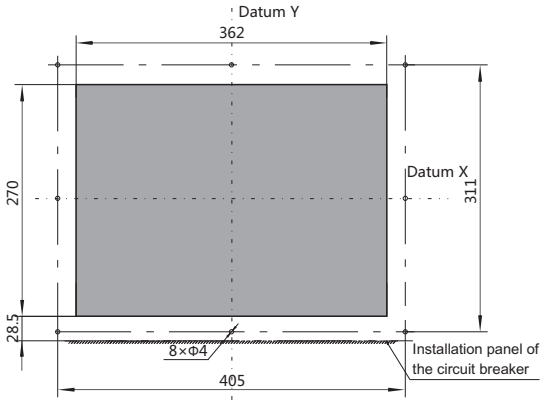

Hole size of the panel of the fixed type circuit breaker

«Электро-Профи» - www.ep.ru

Horizontal connection

Side view

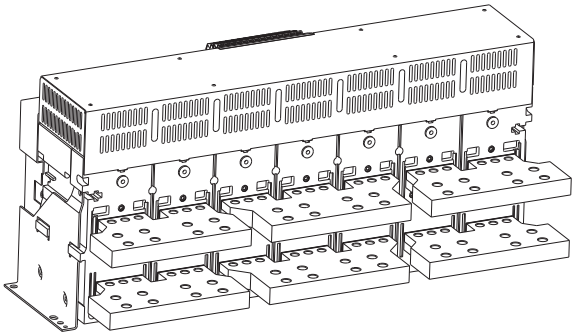

Busbar size and interval

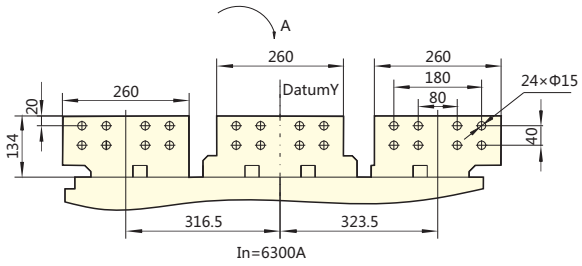

In=6300A

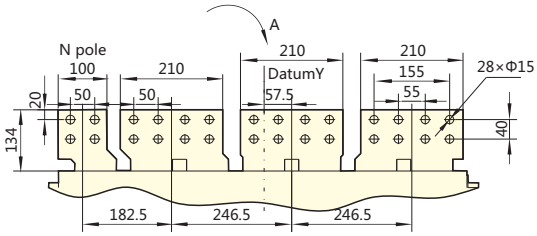

In=4000A～5000A (Four pole)

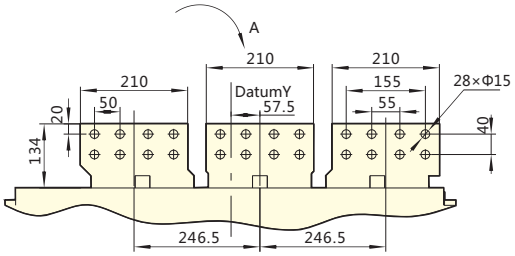

In=4000A～5000A(Three pole)

«Электро-Профи» - www.ep.ru

6300A draw-out type

Front view

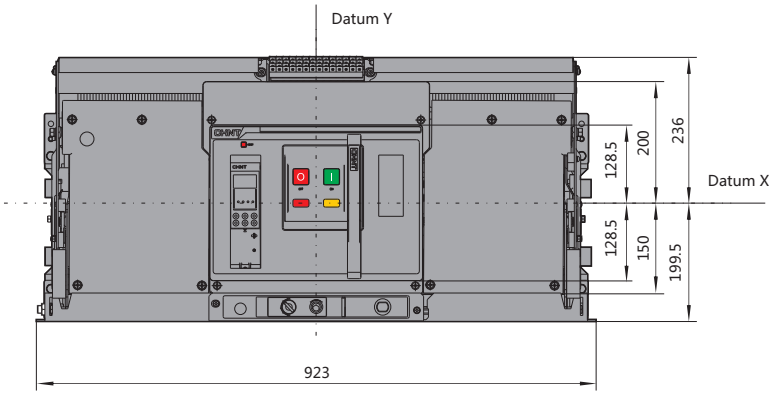

Side view

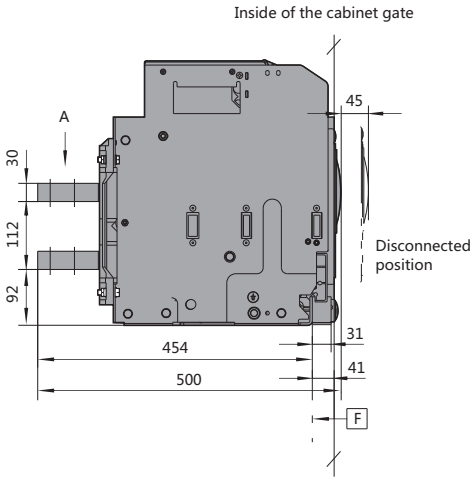

Hole size

Hole size of the base

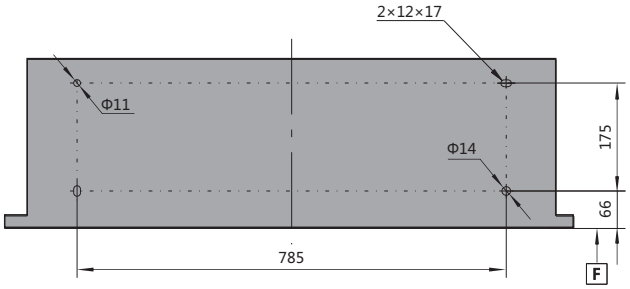

Hole size of the panel of the fixed type circuit breaker

Hole size of panel

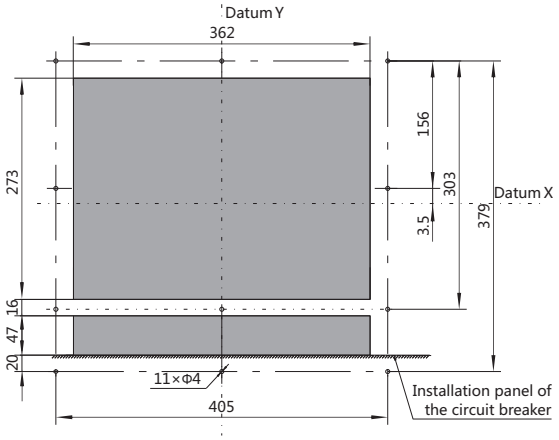

Hole size of the panel of the draw-out type circuit breaker

«Электро-Профи» - www.ep.ru

Horizontal connection

Side view

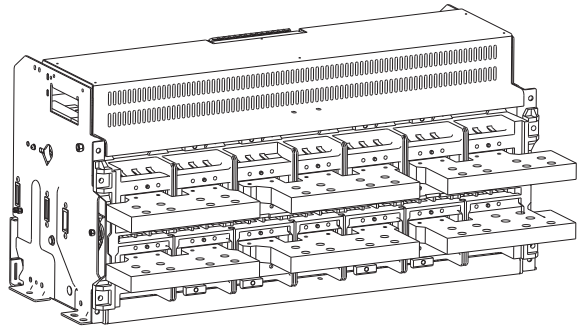

Busbar size and interval

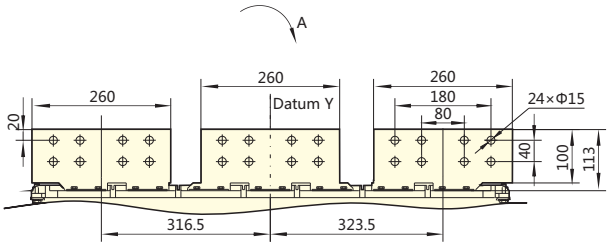

In=6300A

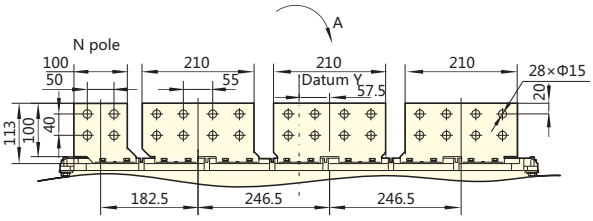

In=4000A～5000A (Four pole)

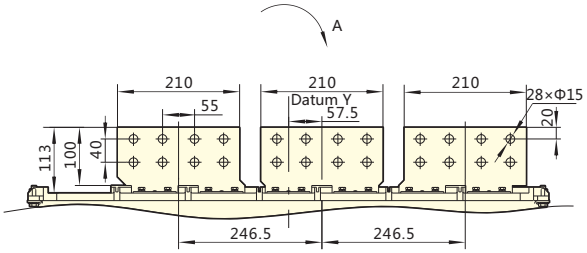

In=4000A～5000A(Three pole)

N

«Электро-Профи» - www.ep.ru

External transformer (Neutral CT) (3P+N mode)

External transformer (Neutral CT) dimension

The installation overall dimension of an external N-phase transformer is as below when the controller is of 3P+N type.
The transformer is provided by the manufacturer. A connection copper bar and an installation support are manufactured by users.

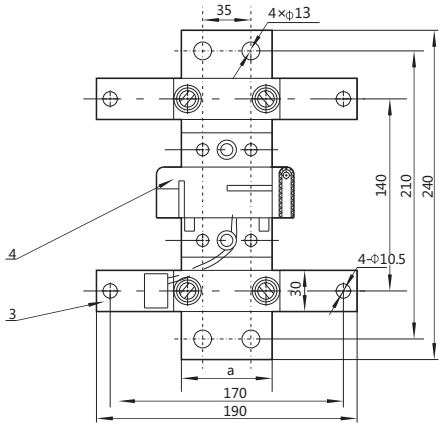

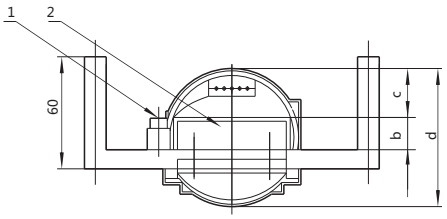

1-Wiring panel 2-Busbar 3-Fixation panel 4-Transformer

Frame size	a	b	c	d
1600	45	20	40	88
2000	60	20	34	89
3200	80	20	35	110
4000	120	20	16	58
6300	80	20	35	110

4CT Type earth current transformer

Structural dimension of external earth current transformer (W type)

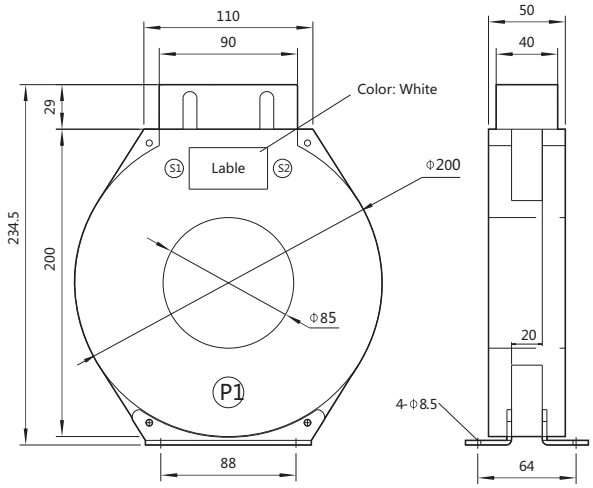

«Электро-Профи» - www.ep.ru

CTB-2 Type earth current transformer

Structural dimension of external earth current transformer (W type)

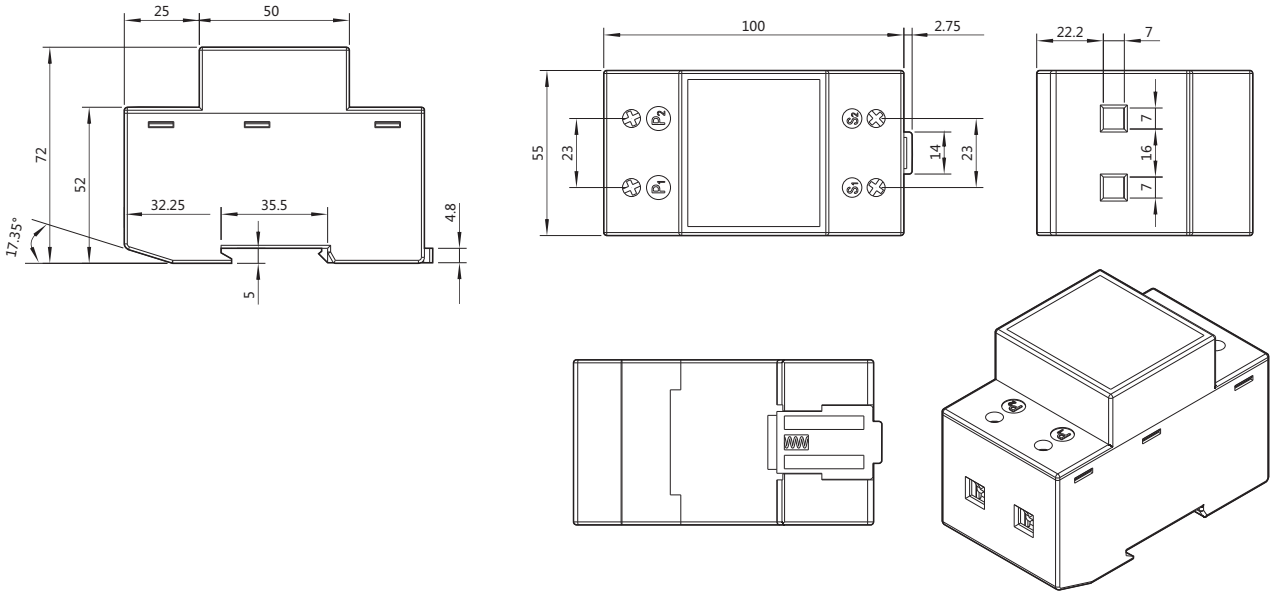

Undervoltage time delay controller

Installation overall dimension of undervoltage time-delay controller which is required to be plugged in the undervoltage time-delay tripper

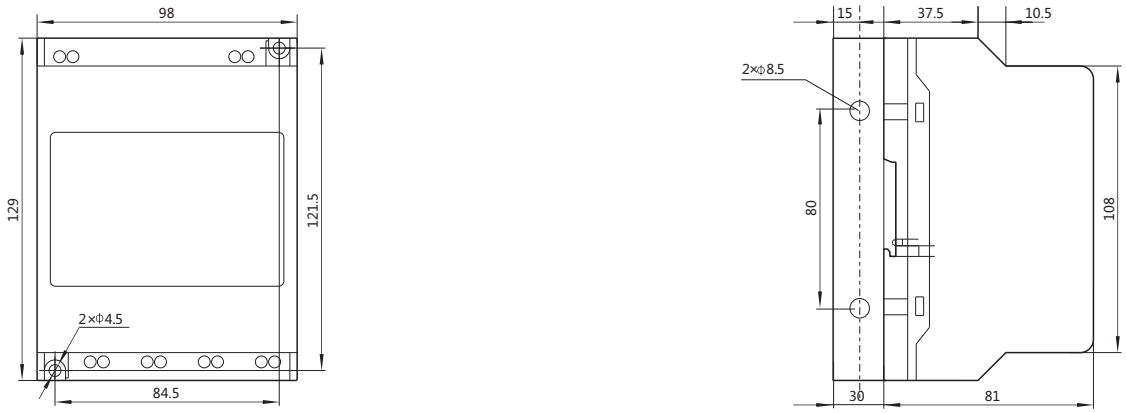

«Электро-Профи» - www.ep.ru

Secondary circuit wiring

1600A frame

M/A type control unit

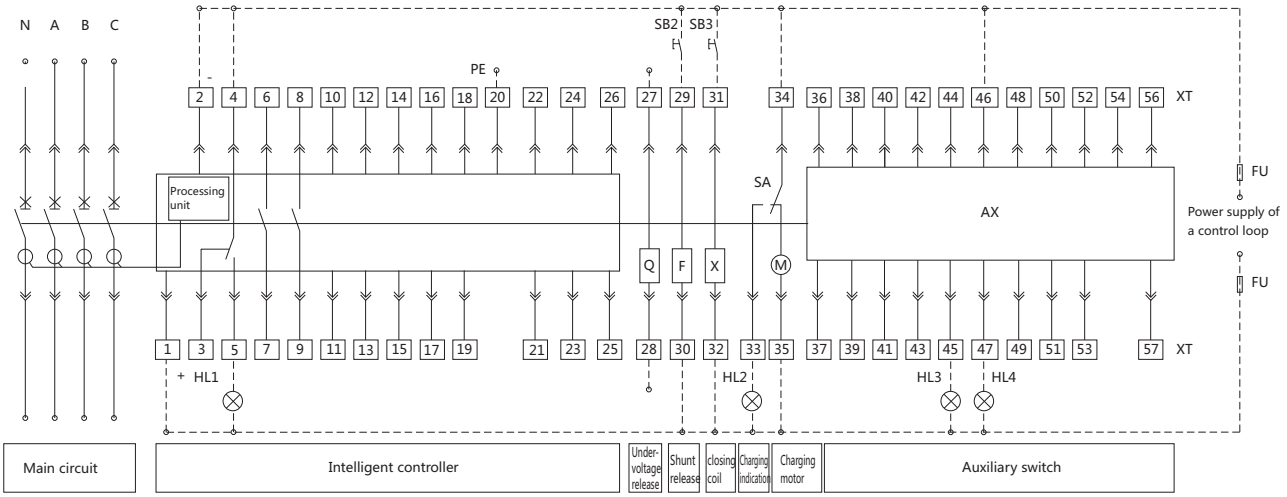

AX auxiliary contact type

For user

Four groups of adapters (Default)

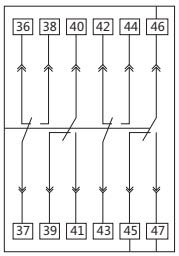

Six groups of adapters

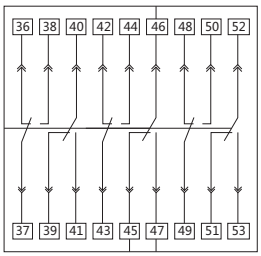

Q-Undervoltage release F-Shunt release X-Closing coil
M-Charging motor SA-Limited XT-Wiring terminal
AX-Auxiliary contact SB1-Emergency stop button
SB2-Tripping push button SB3-Closing push button HL1-Failure indication lamp
HL2-Charging indication lamp HL3-Tripping indication lamp
HL4-Closing indication lamp FU-Fuse (6A)
1#, 2#: Power supply of intelligent controller
3#~5#: Tripping alarm contact (4-common point)
6#, 9#: Auxiliary contact, normally open contact
10#~11#: Empty
12#~19#: Empty
20#: PE line
21#~24#: Empty
25#~26#: External N-phase transformer input signal contacts. Conventional products are empty. When an external transformer is required to be attached for special order of users, they are external transformer signal input contacts.
27#, 28#: Undervoltage release (Connected to the main circuit)
29#, 30#: Shunt release
31#, 32#: Closing coil
33#, 34#: Charging indication
34#, 35#: Charging motor
36#~56#: Auxiliary contact
Conventional products are four groups of adapters, and six groups of adapters can be provided(only for AC) for special order for users.
Note: The full line section is connected, and the dot line is connected by customers.

«Электро-Профи» - www.ep.ru

N

1600A frame

P/H type control unit

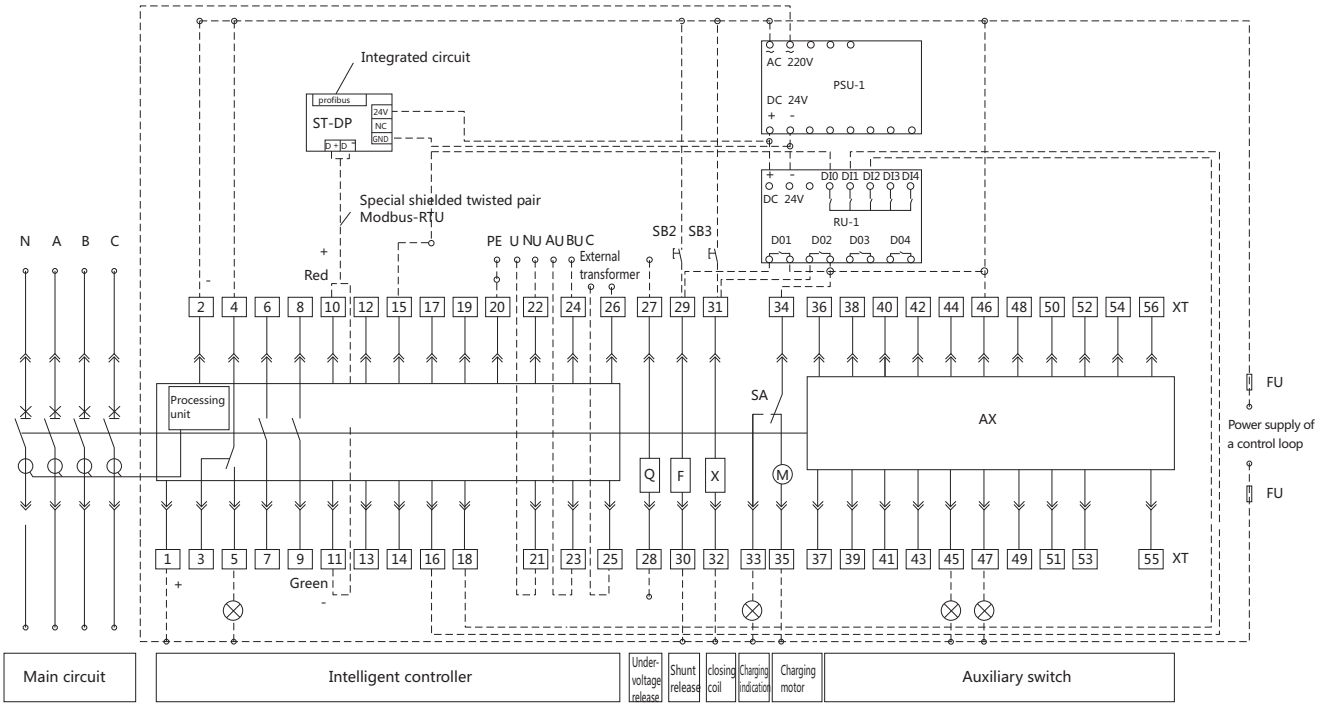

AX auxiliary contact type

For user

Four groups of adapters (Default) Six groups of adapters

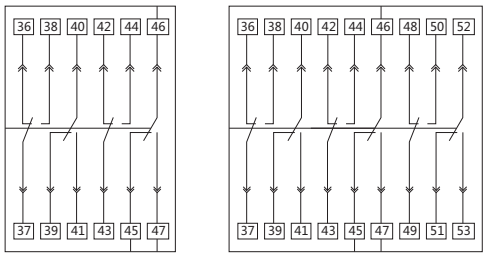

Q-Undervoltage release F-Shunt release
X-Closing coil M-Charging motor
SA-Limited switch XT-Wiring terminal AX-Auxiliary contact
SB1-Emergency stop button SB2-Tripping push button
SB3-Closing push button HL1-Failure indication lamp
HL2-Charging indication lamp
HL3-Tripping indication lamp HL4-Closing indication lamp
FU-Fuse (6A) PSU-1—power module
1#, 2#: Power supply of intelligent controller
3#~5#: Tripping alarm contact (4-common point)
6#~9#: Auxiliary contact, normally open contact
10#~11#: Defaulted communication output contact for a H type intelligent controller. P type is empty
12#~19#: Four groups of programmable output contacts
12# : com, 18#:D01, 16#:D02, 14#D03, 13#D04

H type intelligent controller with a programmable output contact outputs in default: 12#, 13#: load 1 alarm, 12#, 14#: load 2 alarm, 12#,16#: tripping signal output, 12#, 18#: Closing signal output
P type intelligent controller with a programmable output contact outputs in default: 12#, 13#: load 1 alarm, 12#, 14#: load C alarm, 12#, 16#: self-diagnosis alarm, 12#, 18#: failure tripping.
20#: PE line.
21#~24#: voltage display input signal contact
P/H type intelligent controller 21#:N-phase voltage signal
22#: A-phase voltage signal 23#:B-phase voltage signal,
24#: C- phase voltage signal
25#~26#: External N-phase transformer or external earth current transformer input signal contacts. Conventional products are empty. When an external transformer is required for special order for users, they are external transformer signal input contacts.
27#, 28#: Undervoltage release (Connected to the main circuit)
29#, 30#: Shunt release
31#, 32#: Closing coil
33#, 34#: Charging indication
34#, 35#: Charging motor
36#~56#: Auxiliary contact
Conventional products are four groups of adapters, and six groups of adapters can be provided for special order for users (only for AC).
ST-DP: DP protocol module. When the upper computer communication protocol is Modbus-RTU, the ST-DP protocol module is not required. When the upper computer communication protocol is Profibus-DP, the Modbus-RTU protocol module is required to be converted into Profibus-DP protocol by the ST-DP protocol module, extra fee needed.
RU-1 :relay module. The circuit breaker is used for tripping and switching via remote control, and is used for tripping and switching signal energy amplification, extra fee needed.
Note: The full line section is connected, and the dot line should be connected by customers.

«Электро-Профи» - www.ep.ru

2000-6300A frame

M/A type control unit

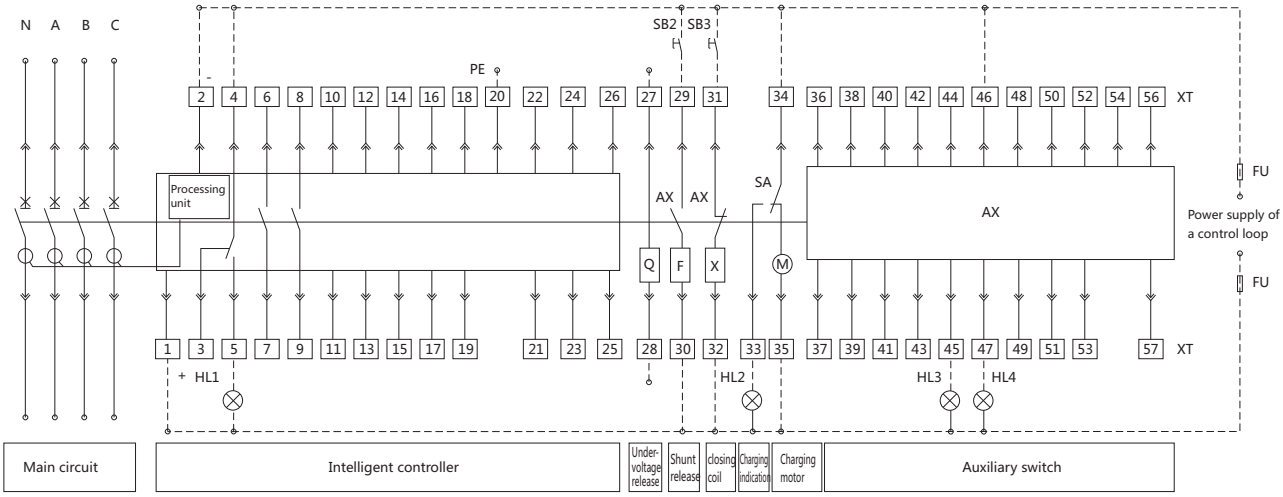

AX auxiliary contact type

For user

Four groups of adapters (Default)

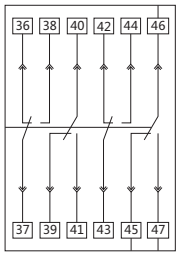

Five groups of adapters

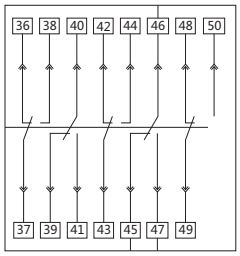

Three-open three-closed auxiliary contact

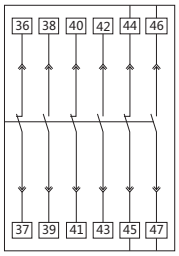

Four-open four-closed auxiliary contact

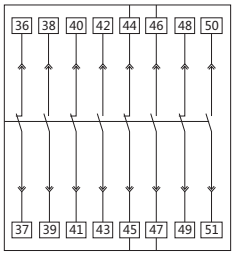

Five-open five-closed auxiliary contact

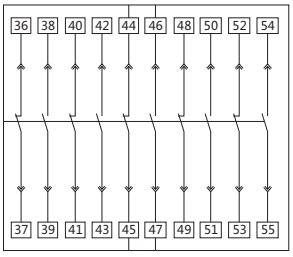

Six-open Six-closed auxiliary contact

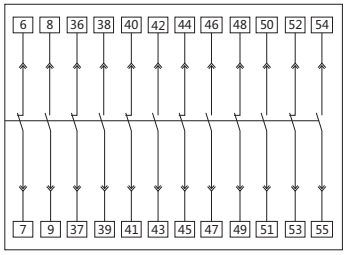

Q-Undervoltage release F-Shunt release X-Closing coil
M-Charging motor SA-Limited switch XT-Wiring terminal
AX-Auxiliary contact SB1-Emergency stop button SB2-Tripping push button
SB3-Closing push button HL1-Failure indication lamp
HL2-Charging indication lamp HL3-Tripping indication lamp
HL4-Closing indication lamp FU-Fuse (6A)
1#, 2#: Power supply of intelligent controller
3#~5#: Tripping alarm contact (4-common point)
6#~9#: Auxiliary contact, normally open contact
10#~11#: Empty
12#~19#: Empty
20#: PE line
21#~24#: Empty
25#~26#: External N-phase input signal contacts.
Conventional products are empty. When an external transformer is required to be attached for special order of users, they are external transformer signal input contacts.
27#, 28#: Undervoltage release (Connected to the main circuit or connedted to the output of the undervoltage delay module)
29#, 30#: Shunt release
31#, 32#: Closing coil
33#, 34#: Charging indication
34#, 35#: Charging motor
36#~56#: Auxiliary contact
Conventional products are four groups of adapters.
The three-open three-closed auxiliary contact, the four-open four-closed auxiliary contact, the five-open five-closed auxiliary contact, and five groups of adapters can be provided for the special order for users.
Note: 1. the full line section is connected, and the dot line should be connected by customers.
Note: 2. when the voltages of the controller of the 2000-4000 frame are AC 230V/AC 400V, the controller can be directly connected to 1#, 2#terminals. When the voltage is DC 220V/DC 110V, the controller can be connected to 1#, 2# terminals after the power supply module outputs DC 24V.

«Электро-Профи» - www.ep.ru

2000-6300A frame

P/H type control unit

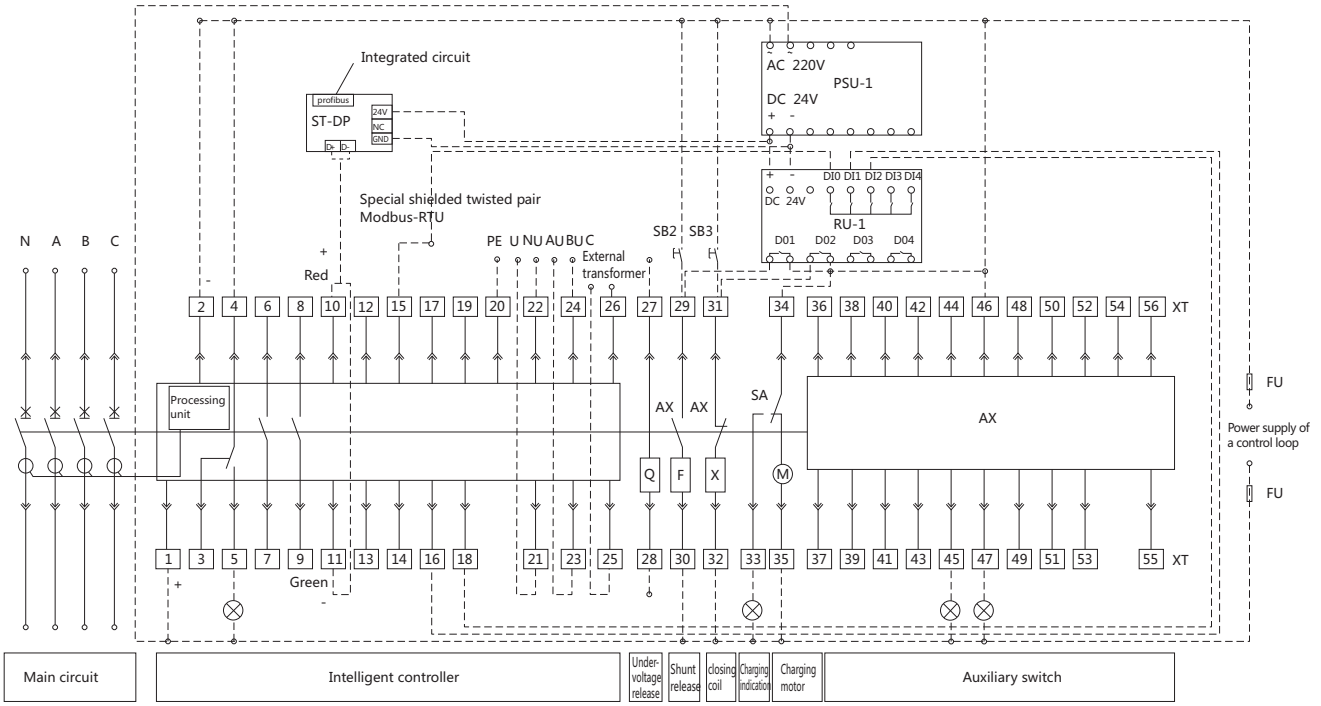

AX auxiliary contact type

For user

Four groups of adapters (Default)

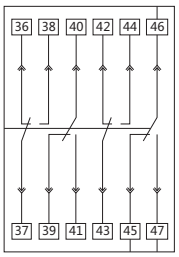

Five groups of adapters

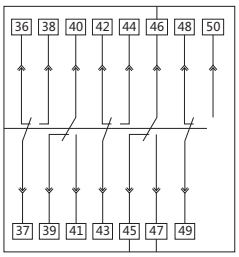

Three-open three-closed auxiliary contact

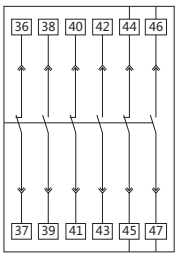

Four-open four-closed auxiliary contact

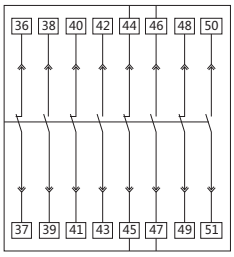

Five-open five-closed auxiliary contact

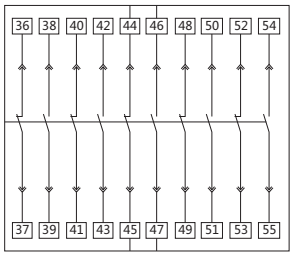

21#~24#: voltage display input signal contact
P/H type intelligent controller
21#: N-phase voltage signal, 22#: A-phase voltage signal
23#: B-phase voltage signal, 24#: C- phase voltage signal
25#~26#: External N-phase transformer or external earthing current transformer input signal contacts.
Conventional products are empty. When an external transformer is required for special order for users, they are external transformer signal input contacts.
27#, 28#: Undervoltage release (Connected to the main circuit or connedted to the output of the undervoltage delay module)
29#, 30#: Shunt release, 31#, 32#: Closing coil, 33#, 34#: Charging indication
34#, 35#: Charging motor, 36#~56#: Auxiliary contact

Q-Undervoltage release F-Shunt release X-Closing coil
M-Charging motor SA-Limited switch XT-Wiring terminal
AX-Auxiliary contact SB1-Emergency stop button SB2-Tripping push button
SB3-Closing push button HL1-Failure indication lamp
HL2-Charging indication lamp HL3-Tripping indication lamp
HL4-Closing indication lamp FU-Fuse (6A) PSU-1—power module
1#, 2#: Power supply of intelligent controller
3#~5#: Tripping alarm contact (4-common point)
6#~9#: Auxiliary contact, normally open contact
10#~11#: Defaulted communication output contact for a H type intelligent controller.
P type is empty
12#~19#: Four groups of programmable output contacts
12# : com, 18 #:D01,16 #:D02,14 #D03,13 #D04
H type intelligent controller with a programmable output contact outputs in default:
12#, 13#: load 1 alarm, 12#, 14#: load 2 alarm, 12#,16#: tripping signal output,
12#, 18#: switching signal output.
P type intelligent controller with a programmable output contact outputs in default:
12#, 13#: load 1 alarm, 12#, 14#: load C alarm, 12#,16#: self-diagnosis alarm,
12#, 18#: failure tripping.
20#: PE line.

Conventional products are four groups of adapters. The three-open three-closed auxiliary contact, the four-open four-closed auxiliary contact, the five-open five-closed auxiliary contact, and five groups of adapters can be provided for the special order for users.
ST-DP: DP protocol module. When the upper computer communication protocol is Modbus-RTU, the ST-DP protocol module is not required. When the upper computer communication protocol is Profibus-DP, the Modbus-RTU protocol module is required to be converted into Profibus-DP protocol by the ST-DP protocol module, extra fee needed.
RU-1: relay module. The circuit breaker is used for breaking and making via remote control, and is used for breaking and making signal energy amplification, extra fee needed.
Note: 1. the full line section is connected, and the dot line should be connected by customers.
Note: 2. when the voltages of the controller of the 2000-4000 frame are AC 230V/AC 400V, the controller can be directly connected to 1#, 2#terminals.
When the voltage is DC 220V/DC 110V, the controller can be connected to 1#, 2# terminals after the power supply module outputs DC 24V.

«Электро-Профи» - www.ep.ru

Chassis position indicator device

Wiring diagram

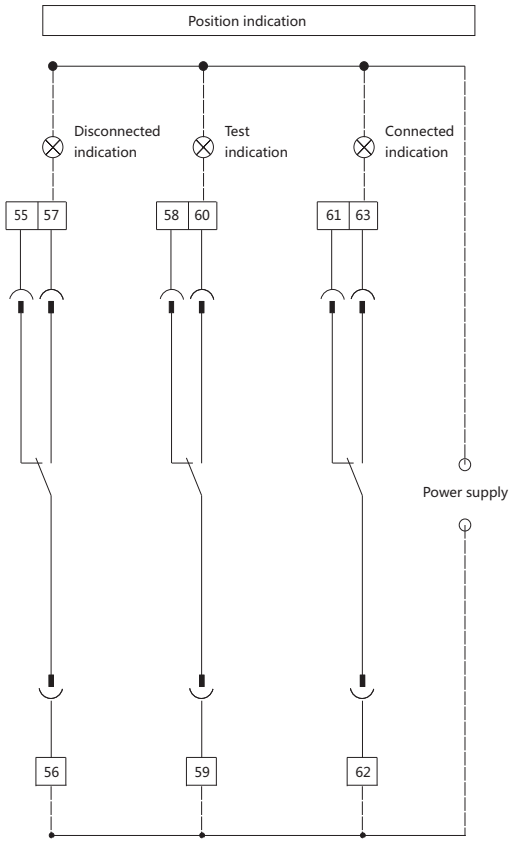

Operation requirements:

1. The chassis indication device can indicate the positions including "disconnected" ,"test" and "connected"which are completely or partially used according to the requirements of order.
2. When the body of the draw-out type circuit breaker is pushed from the "disconnected" position to the "test" position, 55# and 56# terminals should be transferred from connection into disconnection, and 56# and 57# terminals should be transferred from disconnection to connection.
3. When the body of the draw-out type circuit breaker is pushed from the "disconnected" position to the "test" position, 58# and 59# terminals should be transferred from connection into disconnection, and 59# and 60# terminals should be transferred from disconnection to connection. There is sufficient safety distance between the bus of the circuit breaker body and a bridge-type contact of the safety shutter, and tripping and switching operation can be carried out reliably.
4. When the body of the draw-out type circuit breaker is switched from the "test" position to the "connected" position, NXA16 type secondary circuit has no clearance. The NXA20-63 type safety shutter swing continuously after sending out the '"cracking" sound, and the safety shutter jiggle handle rotates within 1.5 circles. 61# and 62# terminals are being transferred from connection to disconnection. 62# and 63# terminals are transferred from disconnection to connection. The busbar of circuit breaker body is required to be reliably inserted into the bridge-type contact of the chassis base, and reliably bear the main circuit current to operate.
5. When the body of the draw-out type circuit breaker is pushed from the "connected" position to the "test" position, 58# and 59# terminals should be transferred from connection into disconnection, and 59# and 60# terminals should be transferred from disconnection to connection. There is sufficient safety distance between the busbar of the circuit breaker body and a bridge-type contact of the chassis, and tripping and switching operation can be carried out reliably.
6. When the body of the draw-out type circuit breaker swings from the "test" position to the "disconnected" position, 55# and 56# terminals should be transferred from connection to disconnection, and 56# and 57# terminals should be transferred from disconnection to connection, and at the same time, the circuit breaker body still cannot be drawn out, and needs to swing toward the "disconnected" position until the handle cannot swing any more, and meanwhile, the circuit breaker body can be drawn out. After the circuit breaker is pulled out, 55# and 56# terminals should be transferred from disconnection to connection, and 56# and 57# terminals should be transferred from connection to disconnection.
7. In the position transfer operation process of the chassis, the operation can only be stopped when the indicator points to "disconnected", "test" and "conncected" or the position indicator cannot display the position of the circuit breaker body in the chassis correctly.

Note: These number is used for position indicator only.

«Электро-Профи» - www.ep.ru

Standard configuration	1600A frame		2000A frame		3200A frame		4000A frame		6300A frame	
	Fixed type	draw-out type	Fixed type	draw-out type	Fixed type	draw-out type	Fixed type	draw-out type	Fixed type	draw-out type
Circuit breaker body	■	■	■	■	■	■	■	■	■	■
Chassis		■		■		■		■		■
Intelligent controller	■	■	■	■	■	■	■	■	■	■
Vertical and horizontal connection	■	■	■	■	■	■	■	■	■	■
ON/OFF indication contact 4CO	■	■	■	■	■	■	■	■	■	■
Failure tripping indication contact	■	■	■	■	■	■	■	■	■	■
Motor operating mechanism	■	■	■	■	■	■	■	■	■	■
Closing coil	■	■	■	■	■	■	■	■	■	■
Shunt release	■	■	■	■	■	■	■	■	■	■
Door frame	■	■	■	■	■	■	■	■	■	■

Optional accessories	1600A frame		2000A frame		3200A frame		4000A frame		6300A frame	
	Fixed type	draw-out type	Fixed type	draw-out type	Fixed type	draw-out type	Fixed type	draw-out type	Fixed type	draw-out type
Standard undervoltage release	■	■	■	■	■	■	■	■	■	■
Adjustable time-delay undervoltage unit	■	■	■	■	■	■	■	■	■	■
Pushbutton lock	■	■	■	■	■	■	■	■	■	■
"Disconnected" position padlock		■		■		■		■		■
Safety shutters padlock		■		■		■		■		■
Body lock	■	■	■	■	■	■	■	■	■	■
Position door interlock		■		■		■		■		■
State door interlock		■		■		■		■		■
ON/OFF indication contact 6CO	■	■								
ON/OFF indication contact 5NO + 5NC			■	■	■	■	■	■	■	■
ON/OFF indication contact 3NO + 3NC			■	■	■	■	■	■	■	■
ON/OFF indication contact 4NO+4NC			■	■	■	■	■	■	■	■
ON/OFF indication contact 5CO			■	■	■	■	■	■	■	■
"Connected", "Disconnected" and "test" position indication contact		■		■		■		■		■
Mechanical interlock	■	■	■	■	■	■	■	■	■	■
Source-changeover controller	■	■	■	■	■	■	■	■	■	■
External transformer (Neutral CT)	■	■	■	■	■	■	■	■	■	■
Earth current transformer and accessories thereof	■	■	■	■	■	■	■	■	■	■
Interphase barrier	■	■	■	■	■	■	■	■	■	■

«Электро-Профи» - www.ep.ru

Frame size	1600A			2000A			3200A			4000A			6300A
Circuit breaker	N ☐	S ☐	H ☐	N ☐	S ☐	H ☐	N ☐	S ☐	H ☐	N ☐	S ☐	H ☐	H ☐
Rated current	400A ☐			630A ☐			1600A ☐			3200A ☐			4000A ☐
	630A ☐			800A ☐			2000A ☐			3600A ☐			5000A ☐
	800A ☐			1000A ☐			2500A ☐			4000A ☐			6300A ☐
	1000A ☐			1250A ☐			3200A ☐						
	1250A ☐			1600A ☐									
	1600A ☐			2000A ☐									
Number of poles	3 pole ☐			4 pole ☐ (While In=6300A , no four poles)									
Installation modes	Horizontal draw-out ☐						Fixed and horizontal ☐						
Intelligent controller	M type ☐		A type ☐	P type ☐		PT type ☐	H type ☐		HT type ☐				
Shunt release and motor operation	Closing coil ☐								Shunt release ☐				
	AC220/230/240V ☐			AC380/400/415V ☐			DC110V ☐		DC220V ☐				
Undervoltage release (Match)	UVT ☐	ASUVT ☐		UVTD ☐	ASUVTD ☐								
	AC220/230/240V ☐ 1s☐ 2s☐ 3s☐ 4s☐ 5s☐			AC380/400/415V ☐									
Auxiliary contact	NXA16: C04☐ C06☐ (C06 only for AC) NXA20~63: N3☐ N4☐ N5☐ C03☐ C04☐ C05☐												
Connection accessories	Interphase barrise ☐												
Controller accessories (Match)	External transformer: Earth current transformer ☐						External transformer (Neutral CT) ☐						
	Note: [1] Neutral CT is only applicable to 3P+N [2] The earth current transformer should be selected when customers select earth current return type earthing protection.												
Lock mechanism (Match)	Pushbutton lock ☐		Safety shutters padlock ☐			Body lock ☐			One-lock one-key ☐		Two-locks one-key ☐		
	Three-locks two-keys ☐		"Disconnected" position padlock ☐			Door interlock (Body) ☐			Door interlock (chassis) ☐				
Mechanical interlock (Match)	1 "Normal" and 1 "Replacement" ☐ 2 "Incoming" and 1 "Busbar" ☐												
Source-changeover controller (Match)	1 "Normal" and 1 "Replacement" ☐ 2 "Incoming" and 1 "Busbar" ☐												











«Электро-Профи» - www.ep.ru

Earth protection

There are two protected modes for metal single-phase earth fault, namely vector sum(T) and earth current(W).Type-T detects zero sequence current and four-phase current vector(three-phase four-wire system) or three-phase current vector(three-phase three-wire system) will be added to provide reference for earth protection. Type-W detects earthing cable current directly by special external transformer. Type-W can protect both stages of breaker at the same time. Distance between the transformer and breaker should be no more than 5m. Zone interlocking can be used in the condition of vector sum earth fault.

a.correlation setting parameters of earth protection

Parameter Names	Setting range	Setting step size	Remarks
Set value of action current Ig	OFF+(0.2~1.0)×In (Frame NXA16/NXA20, Max= 1200A) OFF+(500A~1200A) (Frame NXA32/NXA40/NXA63)	1A	
delay time Tg	(0.1~0.4)S	0.1s	
Zone interlocking of earth fault (for T-type earth fault) (ZSI)	1.At least one way of DO should be set as "Zone Interlocking" or "earth Interlocking" 2.At least one way of DI should be set as "Zone Interlocking" or "earth Interlocking"		Signal unit options must be S2 or S3 When DI/DO is set as zone interlocking , it effects "Earth Zone Interlocking" and "Short Zone Interlocking" When DI/DO is set as earth interlocking, it only effects "earth Zone Interlocking" . If the function isn' t set, it has no effect.

b. Operating characteristic of earth protection

Characteristic	I/Ig	Tripping time	Permissible error
Non-operating characteristic	< 0.9	Non-operate	
Operation characteristic	> 1.1	Operate	
Time-delay operation	≥1.1	Note	±15% or inherent absolute error±40ms(choose the max value)

Note: The delay time of earth fault is divided into two stages, inverse time and definite time. When fault current is less than 1.0In or 1200A,the protection is inverse, the time delay is calculated as follow:

$t=(1.0In\ or 1200A/I)^2\times Tg$

In this equation: t---action time

Tg --- setting delay time

I---fault earth current

«Электро-Профи» - www.ep.ru

When fault current is more than 1.0In or 1200A, the protection is definite; the time delay is the setting delay time.

c. Schematic Diagram of detection

Type-T

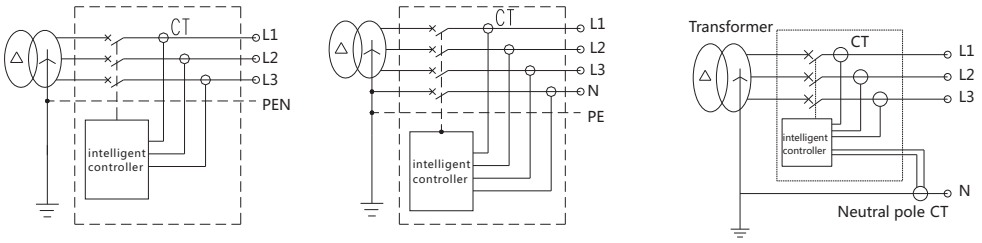

3P 4P 3P+N

Type-W

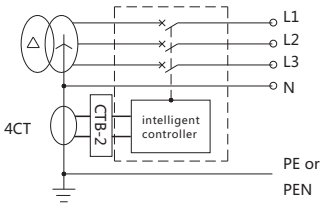

4CT:external special transformer CTB-2:earth current transformer module

Leakage protection (E)

Leakage protection applies to leakage fault caused by insulation failure of equipment or human touching exposed electric conduction position. Leakage tripping current IΔn is independent of breaker rated current. An extra rectangular transformer is needed for zero sequence sampling method. This method is appropriate for small current protection because of its high accuracy and sensitivity.

a. correlation setting parameters of leakage protection

Parameter Names	Setting range	Setting step size
Set value of action current IΔn	(0.5~30.0)A	0.1A
Delay time TΔn(S)	Instantaneous , 0.06 , 0.08 , 0.17 , 0.25 , 0.33 , 0.42 , 0.5 , 0.58 , 0.67 , 0.75 , 0.83	
Operation mode	Trip/Turn off	

b .Operating characteristic of leakage protection

Characteristic	I/IΔn	Tripping time	Permissible error
Non-operating characteristic	< 0.8	Non-operate	
Operation characteristic	> 1.0	Operate	
Time-delay operation	≥1.0	Shown in Table 18	±10% (inherent absolute error±40ms)

Setting time(s)	0.06	0.08	0.17	0.25	0.33	0.42	0.5	0.58	0.67	0.75	0.83	Instantaneous
Multiple of Fault Current	Maximum Breaking Time(s)											
1 IΔn	0.36	0.5	1	1.5	2	2.5	3	3.5	4	4.5	5	0.04
2 IΔn	0.18	0.25	0.5	0.75	1	1.25	1.5	1.75	2	2.25	2.5	0.04
5 IΔn	0.072	0.1	0.2	0.3	0.4	0.5	0.6	0.7	0.8	0.9	1	0.04
10 IΔn												

«Электро-Профи» - www.ep.ru

c. Schematic Diagram of leakage protection

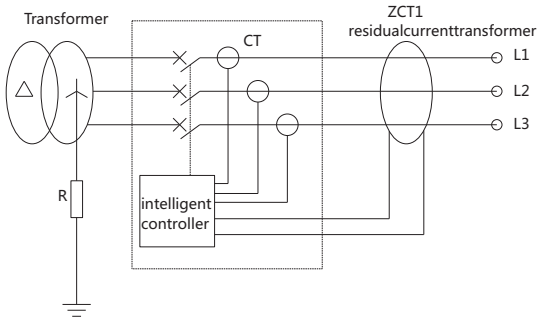

ZCT1:rectangular leakage transformer （NXA16&NXA20-3P）

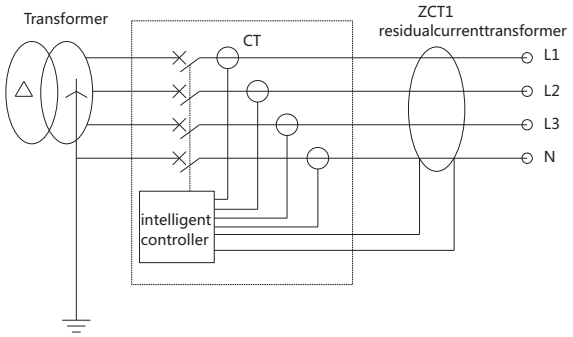

ZCT1：rectangular leakage transformer(NXA16-4P)

Note: For Frame nxa16(3P&4P) and NXA20(3P) products, busbar can go through ZCT1, however, not for Frame NXA20 4P and FrameNXA32/NXA40/NXA63.

Dual earth fault protection

NXA P/H type controller has a unique feature: the installation of two independent earth fault protection curves is permissible, so that two kinds of configurations can be managed at the same time. The release can differentiate unlimited regional earth faults because of the feature to command the NXA circuit breaker to trip and the limited regional earth fault to command the medium-voltage circuit breaker to strip.

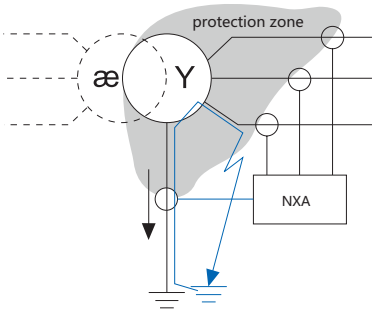

«Электро-Профи» - www.ep.ru

Functions of the controller

2A type display and operation

CD-1: A 2A type source-changeover system is used for the switch between power grids or between the power grid and generator. When a normal power supply does not supply power normally, such as undervoltage, overvolgage, phase breaking, a spare power supply is switched for supplying power. A mechanical interlock component is configured according to standard.

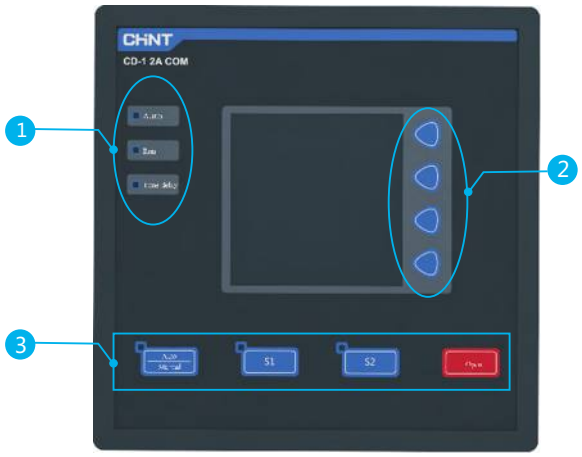

Switch operation zone	Automatic (The system judges the operateion automatically, and the light is on when pressing the left upper part)
	Manual (The mechanism is operated by a handle or with buttons S1, S2 and OFF operation)
	S1:load is powered by switching to S1, and the light is on when pressing S1 in the left upper part.
	S2: load is powered by switching to S2, and the light is on when pressing S2 in the left upper part.
	Disconnection: S1, S2 are stripped, and the system load is not powered
	Pressing anyone of buttons S1, S2 and OFF under the automatic condition, the system becomes manual, and corresponding operation is carried out when pressing corresponding buttons.

2A type of functions

The controller has the following functions

1. Dual-circuit voltage detection display
2. Overvoltage threshold value adjustment: 400V-480V
3. Undervoltage threshold value adjustment: 280V-360V
4. Adjustment of T1, T2, T3 and T4: 0.5-64S with the step size of 0.5S
5. Undervoltage and overvoltage fault indication
6. Power supply fault indication
7. State indication of the circuit breaker
8. Self-input and self-reset or self-input and self-reset selection
9. Manual or automatic selection
10. Comprehensive alarm for transfer failure (fault of the circuit breaker, sending fault of control signals and unmet transfer conditions)
11. All primary adjustment states after resetting and before defaulting
12. Alarm contact
13. Unloading contact
14. Startup contact of a power generator
15. Standard configuration
16. Mechanical interlock
17. The controller has an overvoltage protection function, and operates normally with long-term overvoltage: 130% Ue.

Truth table

S1-circuit power supply	S2-circuit power supply
1	0
0	0
0	1

«Электро-Профи» - www.ep.ru

3A type display and operation

CD-1 A 3A source-changeover system is applicable to a power supplying system with two power supplies and one buscouple. In the manual operation process, load cannot lead to power interruption, so that the safety running level and the power supplying continuity for power distribution are enhanced. The 3A automatic power supply conversion system is applied to electric places.

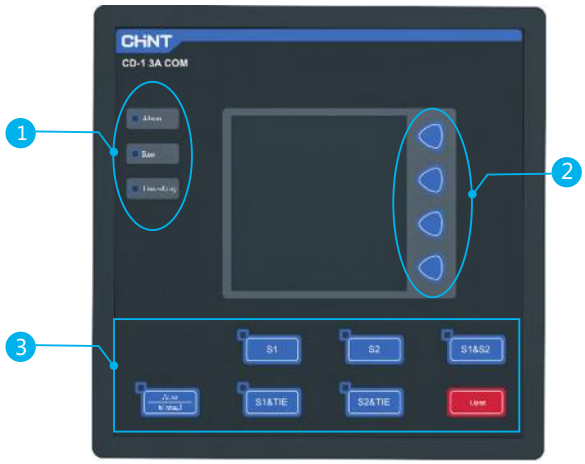

Switch operation zone	Automatic (The system judges the operateion automatically, and the light is on when pressing the left upper part)
	Manual (The mechanism is operated by a handle or with buttons S1, S2, S1 & S2, S1&TIE, S2&TIE and OFF operation)
	S1: load is powered by switching to S1, the TIE buscouple is tripped, and the light is on at the left upper part when pressing S1.
	S2: load is powered by switching to S2, the TIE buscouple is tripped, and the light is on at the left upper part when pressing S2.
	S1 & S2:Load is powered by S1 & S2, TIE buscouple is tripped; the light is on at the left upper part when pressing S1 & S2.
	S1&TIE: Load is powered by S1, TIE buscouple is tripped; the light is on at the left upper part when pressing S1&TIE
	S2&TIE: Load is powered by S2, TIE buscouple is tripped; the light is on at the left upper part when pressing S2&TIE
	Disconnection: S1,S2 and TIE are all stripped, and the system load is not powered.
	Pressing anyone of buttons S1, S2 S1 & S2, S1&TIE, S2&TIE under the automatic condition, the system becomes manual, and corresponding operation is carried out when pressing corresponding buttons.

3A type functions

The controller has the following functions

1. Dual-circuit voltage detection display
2. Overvoltage threshold value adjustment: 400V-480V
3. Undervoltage threshold value adjustment: 280V-360V
4. Adjustment of T1, T2, T3 and T4: 0.5-64S with the step size of 0.5S
5. Undervoltage and overvoltage fault indication
6. Power supply fault indication
7. State indication of the circuit breaker
8. Self-input and self-reset or self-input and self-reset selection
9. Manual or automatic selection
10. Comprehensive alarm for transfer failure (fault of the circuit breaker, sending fault of control signals and unmet transfer conditions)
11. All primary adjustment states after resetting and before defaulting
12. Alarm contact
13. Unloading function
14. Standard configuration
15. Mechanical interlock
16. The controller has an overvoltage protection function, and operates normally with long-term overvoltage: 130% Ue.

Truth table

S1-circuit power supply	TIE buscouple	S2-circuit power supply
1	0	1
1	1	0
0	1	1
1	0	0
0	0	1
0	0	0

«Электро-Профи» - www.ep.ru

Note

«Электро-Профи» - www.ep.ru

Note

«Электро-Профи» - www.ep.ru

CHINT ELECTRIC | Next series

The Next Reliable Choice

Motor Control & Protection



The solution for various voltage fluctuation, guarantee the steady operation of the system

With 70% - 120% pull-in voltage range, which can avoid the voltage fluctuation in grid, also operates steadily in the peak power demands.

Equipped with more standard auxiliary contacts, to meet several application requirements

Standard equipped with 1NO+1NC below 100A and 2NO+2NC above 100A, which can optimize the inventory and cost performance.

Ergonomically design, easy to handle and maintain

Integrated label cover, with double coil terminal blocks, which can fast be connected without tools.

Delicate current specification, more cost-effective performance

Newly increase 6A, 16A, 22A, 38A, 75A, which fully cover 6-630A.

Absolute adaptability, with steady and reliable operation in extreme conditions

-35°C/+70°C operating temperature range. Meets several applications requirements.

«Электро-Профи» - www.ep.ru

70%~120%
pull-in voltage

Against voltage fluctuation
More steady and
reliable performance



«Электро-Профи» - www.ep.ru

CHINT ELECTRIC | Next series

Motor Control & Protection

NXC AC contactor

Overview	P-001
Description	P-002
Parameters	P-004
Accessories	P-007
Dimensions and installation	P-011
Wiring diagrams	P-013
Annex I: Instructions for use in abnormal conditions	P-015
Annex Ⅱ: Utilization category description	P-016

NXR thermal overload relay

Overview	P-017
Description	P-018
Parameters	P-020
Product front view	P-021
Dimensions and installation	P-021
Wiring diagrams	P-026
Annex I: Instructions for use in abnormal conditions	P-026

NXRC contactor relay

Overview	P-027
Description	P-027
Normal working conditions and installation conditions	P-028
Parameters	P-028
Structural feature	P-028
Dimensions and installation	P-028
Ordering instructions	P-028

«Электро-Профи» - www.ep.ru

Motor Control & Protection

NXJ plug-in relay

Overview	P-029
Description	P-029
Parameters	P-030
Accessories	P-031
Dimensions and installation	P-031

«Электро-Профи» - www.ep.ru









Overview

Applicable scope

The new NXC AC contactors feature a novel appearance and a compact structure. They are mainly used for frequent starts and control of AC motors as well as remote circuit making /breaking. They can also be combined with appropriate thermal overload relays to form electromagnetic starters.

Compliant standards: IEC/EN 60947-1, IEC/EN 60947-4-1, IEC/EN 60947-5-1.

Parameters

- Rated operation current Ie: 6A~630A
- Rated operation voltage Ue: 220V~690V
- Rated insulation voltage: 690V (NXC-06M~100), 1000V (NXC-120~630)
- Number of poles: 3P and 4P (only for NXC-06M~12M)
- Coil control method: AC (NXC-06(M)~225), DC (NXC-06M~12M), AC/DC (NXC-265~630)
- Installation method: NXC-06M~100 rail and screw installation, NXC-120~630 screw installation

Operation and installation conditions

Type	Operation and installation conditions
Installation class	Ⅲ
Pollution degree	3
Compliant standards	IEC/EN 60947-1, IEC/EN 60947-4-1, IEC/EN 60947-5-1
Certification mark	CE
Enclosure protection degree	NXC-06M~38: IP20; NXC-40~100: IP10; NXC-120~630: IP00
Ambient temperature	Operation temperature limits: -35℃~+70℃. Normal operation temperature range: -5℃~+40℃. The 24-hour average temperature should not exceed +35℃. For use beyond the normal operation temperature range, see "Instructions for use in abnormal conditions" in the annex.
Altitude	Not exceeding 2000 m above sea level
Atmospheric conditions	The relative humidity should not exceed 50% at the upper temperature limit of +70℃. A higher relative humidity is allowed at a lower temperature, e.g. 90% at +20℃. Special precautions should be taken against occasional condensation due to humidity variations.
Installation conditions	The angle between the installation surface and the vertical surface should not exceed ±5°.
Shock and vibration	The product should be installed in places without significant shaking, shock, and vibration.

«Электро-Профи» - www.ep.ru

Description

NXC AC contactor

NXC	-	12	/N	230V	50Hz
Model		Rated current	Special function	Coil voltage	Frequency
		06, 09, 12, 16, 18, 22, 25, 32, 38, 40, 50, 65, 75, 85, 100, 120, 160, 185, 225, 265, 330, 400, 500, 630	/N: Reversible contactor None: Standard contactor	24V, 36V, 48V, 110V, 127V, 220V, 230V,240V, 380V, 415V, 440V, 480V, 660V (AC: 06A~225A; AC/DC: 265A~630A)	50Hz, 60Hz, 50/60Hz

Note: 06A-100A products contain one NO auxiliary contact and one NC auxiliary contact. 120A-630A products contain two NO auxiliary contacts and two NC auxiliary contacts.

NXC miniature 3P AC contactor

NXC	-	06M	10	/Z	/N	230V	50Hz
Model		Rated current	Auxiliary contact	Coil form	Special function	Coil voltage	Frequency
		06M 09M 12M	10: NO 01: NC	/Z: DC control coil None: AC control coil	/N: Reversible contactor None: Standard contactor	AC: 24V, 36V, 48V, 110V, 127V, 220V, 230V, 240V 380V, 415V, 440V, 480V, 660V DC: 24V, 48V, 110V, 220V	50Hz, 60Hz, 50/60Hz

NXC miniature 4P AC contactor

NXC	-	06M	/22	/Z	/N	230V	50Hz
Model		Rated current	4P main contact combination	Coil form	Special function	Coil voltage	Frequency
		06M 09M 12M	/22: 2 NO and 2 NC main contacts /04: 4 NC main contacts /40: 4 NO main contacts	/Z: DC control coil None: AC control coil	/N: Reversible contactor None: Standard contactor	AC: 24V, 36V, 48V, 110V, 127V, 220V, 230V,240V, 380V, 415V, 440V, 480V, 660V DC: 24V, 48V, 110V, 220V	50Hz, 60Hz, 50/60Hz

Model example: NXC-12 240V 50Hz represents an AC contactor under AC-3 utilization category that provides a rated current of 12A at a main circuit voltage of 380V/400V/415V. Each contactor body contains one NO auxiliary contact and one NC auxiliary contact. The coil control voltage and frequency are 240V AC and 50Hz respectively.

«Электро-Профи» - www.ep.ru

NXC AC contactor selection table

Motor power kW			Maximum operation current A	Number of contacts contained in the contactor body		Contactor model
220V/230V/240V	380V/400V	660V/690V	(AC-3 380V/400V)	NO	NC	
1.5	2.2	3	6	1	0	NXC-06M10
1.5	2.2	3	6	0	1	NXC-06M01
1.5	2.2	3	6	1	1	NXC-06
2.2	4	4	9	1	0	NXC-09M10
2.2	4	4	9	0	1	NXC-09M01
2.2	4	5.5	9	1	1	NXC-09
3	5.5	4	12	1	0	NXC-12M10
3	5.5	4	12	0	1	NXC-12M01
3	5.5	7.5	12	1	1	NXC-12
3	7.5	7.5	16	1	1	NXC-16
4	7.5	10	18	1	1	NXC-18
5.5	11	11	22	1	1	NXC-22
5.5	11	15	25	1	1	NXC-25
7.5	15	18.5	32	1	1	NXC-32
9	18.5	18.5	38	1	1	NXC-38
11	18.5	30	40	1	1	NXC-40
15	22	37	50	1	1	NXC-50
18.5	30	37	65	1	1	NXC-65
22	37	37	75	1	1	NXC-75
22	37	45	85	1	1	NXC-85
25	45	45	100	1	1	NXC-100
37	55	80	120	2	2	NXC-120
45	75	100	160	2	2	NXC-160
55	90	100	185	2	2	NXC-185
63	110	110	225	2	2	NXC-225
75	132	160	265	2	2	NXC-265
90	160	200	330	2	2	NXC-330
132	200	300	400	2	2	NXC-400
160	250	335	500	2	2	NXC-500
200	335	350	630	2	2	NXC-630

Coil voltage specification table

NXC-06M~12M								
AC (V) 50Hz	24	36	48	110	127	220 230 240	380	415
AC (V) 60Hz	24	36	48	110	127	220	380	415
DC (V)	24	-	48	110	-	220	-	-

NXC-06~100								
AC (V) 50Hz	24	36	48	110	127	220 230 240	380	415
AC (V) 60Hz	24	36	48	110	127	220	380	415

NXC-120~225								
AC (V) 50Hz	-	-	-	-	110	127	220 230 240	380
AC (V) 60Hz	-	-	-	-	110	127	220	380

NXC-265~630								
AC/DC (V)	-	-	-	-	110~127	220~240	380~415	-

«Электро-Профи» - www.ep.ru

Parameters

Main circuit parameters and technical performance

Contactor model			NXC-06M	NXC-09M	NXC-12M	NXC-06	NXC-09	NXC-12	NXC-16	NXC-18	NXC-22
											
Conventional thermal current Ith (A)			20	20	20	20	20	25	25	32	32
Rated insulation voltage Ui (V)			690								
Rated impulse withstand voltage Uimp (kV)			6			8					
Rated making capacity			Making current: 10×Ie (AC-3) or 12×Ie (AC-4)								
Rated breaking capacity			Breaking current: 8×Ie (AC-3) or 10×Ie (AC-4)								
Rated operation current Ie (A)	220V/230V/240V	AC-3	6	9	12	6	9	12	16	18	22
		AC-4	6	9	12	6	9	12	16	18	22
	380V/400V/415V	AC-3	6	9	12	6	9	12	16	18	22
		AC-4	6	9	9	6	9	12	12	18	18
	660V/690V	AC-3	3.8	4.9	4.9	3.8	6.6	8.9	8.9	12	14
		AC-4	3.8	4.9	4.9	3.8	6.6	8.9	8.9	12	12
Rated control power	AC-3 (kW)	220V/230V/240V	1.5	2.2	3	1.5	2.2	3	3	4	5.5
		380V/400V/415V	2.2	4	5.5	2.2	4	5.5	7.5	7.5	11
		660V/690V	3	4	4	3	5.5	7.5	7.5	10	11
Electrical life (cycles)		AC-3	1.2×10^6								
Mechanical life (cycles)			1.2×10^7								
Main contact			3 NO, 4 NO, 2 NO+2 NC			3 NO					
Fuse supplied for SCPD			NT00-20	NT00-20	NT00-25	NT00-20	NT00-20	NT00-25	NT00-25	NT00-32	NT00-32
Matching thermal overload relay		Model	NXR-12			NXR-25					
Built-in auxiliary contact		3P	1 NO or 1 NC			1 NO+1 NC					
		4P	-								

Control circuit		Contactor model		NXC-06M	NXC-09M	NXC-12M	NXC-06	NXC-09	NXC-12	NXC-16	NXC-18	NXC-22
Main circuit connection	Cable connection (mm^2)	Prefabricated flexible wire	1	1~2.5			1~4				1.5~6	
			2	1~1.5			1~2.5				1.5~4	
		Hard wire	1	1~2.5			1~4				1.5~6	
			2	1~2.5			1~4				1.5~6	
	Size of fastening screw			M3			M3.5				M3.5	
	Tightening torque (N·m)			0.8			0.8				0.8	
Control circuit connection	Cable connection (mm^2)	Prefabricated flexible wire	1	1~2.5			1~4					
			2	1~1.5			1~2.5					
		Hard wire	1	1~2.5			1~4					
			2	1~2.5			1~4					
	Size of fastening screw			M3			M3.5					
	Tightening torque (N·m)			0.8			0.8					

Contactor model		NXC-06M	NXC-09M	NXC-12M	NXC-06	NXC-09	NXC-12	NXC-16	NXC-18	NXC-22
Coil control power supply	AC 50Hz	24, 36, 48, 110, 127, 220, 230, 240, 380, 415			24, 36, 48, 110, 127, 220, 230, 240, 380, 415					
	DC	24, 48, 110, 220			-					
Control voltage	Pull-in	(75%~120%) Us			(70%~120%) Us					
	Release	AC: (20%~70%) Us; DC: (10%~70%) Us			(20%~65%) Us					
Coil average power (VA)	Start	25~40			40~60				40~60	
	Hold	2~7			9.5				9.5	
Heat dissipation (W)	AC	1~3			1~3				1~3	
	DC	-			-				-	

«Электро-Профи» - www.ep.ru

Contactor model				NXC-25	NXC-32	NXC-38	NXC-40	NXC-50	NXC-65	NXC-75	NXC-85	NXC-100
												
Conventional thermal current Ith (A)				40	50	50	60	80	80	90	100	110
Rated insulation voltage Ui (V)				690								
Rated impulse withstand voltage Uimp (kV)				8								
Rated making capacity				Making current: 10×Ie (AC-3) or 12×Ie (AC-4)								
Rated breaking capacity				Breaking current: 8×Ie (AC-3) or 10×Ie (AC-4)								
Rated operation current Ie (A)	220V/230V/240V		AC-3	25	32	38	40	50	65	75	85	100
			AC-4	25	32	38	40	50	65	75	85	100
	380V/400V/415V		AC-3	25	32	38	40	50	65	75	85	100
			AC-4	25	32	32	40	50	65	75	85	100
	660V/690V		AC-3	18	22	22	34	39	42	42	49	49
			AC-4	18	22	22	34	39	42	42	49	49
Rated control power	AC-3 (kW)	220V/230V/240V		5.5	7.5	9	11	15	18.5	22	22	25
		380V/400V/415V		11	15	18.5	18.5	22	30	37	37	45
		660V/690V		15	18.5	18.5	30	37	37	37	45	45
Electrical life (cycles)			AC-3	1.2×10^6			1×10^6			0.8×10^6		
			AC-4	See electrical life curve								
Mechanical life (cycles)				1×10^7			0.9×10^7			0.65×10^7		
Main contact				3 NO								
Fuse supplied for SCPD				gG40	gG50	gG50	gG63	gG80	gG80	gG100	gG100	gG125
Matching thermal overload relay			Model	NXR-25	NXR-38		NXR-100					
Built-in auxiliary contact			3P	1 NO+1 NC								
			4P	-								

Control circuit				Contactor model	NXC-25	NXC-32	NXC-38	NXC-40	NXC-50	NXC-65	NXC-75	NXC-85	NXC-100
Main circuit connection	Cabling (mm^2)	Prefabricated flexible wire	1		1.5~10			6~25			10~35		
			2		1.5~6			4~10			6~16		
		Hard wire	1		1.5~6			6~25			10~35		
			2		1.5~6			4~10			6~16		
	Size of fastening screw				M4			M8			M8		
	Tightening torque (N·m)				1.2			6			6		
Control circuit connection	Cabling (mm^2)	Prefabricated flexible wire	1		1~4								
			2		1~2.5								
		Hard wire	1		1~4								
			2		1~4								
	Size of fastening screw				M3.5								
	Tightening torque (N·m)				0.8								

Contactor model		NXC-25	NXC-32	NXC-38	NXC-40	NXC-50	NXC-65	NXC-75	NXC-85	NXC-100
Coil control power supply	AC 50Hz	24, 36, 48, 110, 127, 220, 230, 240, 380, 415								
Control voltage	Pull-in	(70%~120%) Us								
	Release	(20%~65%) Us								
Coil average power (VA)	Start	50~70			160~210			190~250		
	Hold	8~11.4			13~25			17~30		
Heat dissipation (W)	AC	1~3			4~8			6~10		
	DC	-			-			-		

«Электро-Профи» - www.ep.ru

Contactor model			NXC-120	NXC-160	NXC-185	NXC-225	NXC-265	NXC-330	NXC-400	NXC-500	NXC-630
											
Conventional thermal current Ith (A)			200	200	275	275	315	380	450	630	700
Rated insulation voltage Ui (V)			1000								
Rated impulse withstand voltage Uimp (kV)			12								
Rated making capacity			Making current: 10×Ie (AC-3) or 12×Ie (AC-4)								
Rated breaking capacity			Breaking current: 8×Ie (AC-3) or 10×Ie (AC-4)								
Rated operation current Ie (A)	220V/230V/240V	AC-3	120	160	185	225	265	330	400	500	630
		AC-4	120	160	160	185	265	330	330	500	500
	380V/400V/415V	AC-3	120	160	185	225	265	330	400	500	630
		AC-4	120	160	160	185	265	330	330	500	500
	660V/690V	AC-3	86	107	107	118	170	235	303	353	400
		AC-4	86	107	107	107	137	170	235	303	353
Rated control power	AC-3 (kW)	220V/230V/240V	37	45	55	63	75	90	132	160	200
		380V/400V/415V	55	75	90	110	132	160	200	250	335
		660V/690V	80	100	100	110	160	200	300	335	350
Electrical life (cycles)		AC-3	1.2×10^6				0.8×10^6				
		AC-4	See electrical life curve								
Mechanical life (cycles)			0.6×10^7								
Main contact			3 NO								
Fuse supplied for SCPD			gG224	gG224	gG315	gG315	gG400	gG425	gG500	gG800	gG950
Matching thermal overload relay		Model	NXR-200			NXR-630					
Built-in auxiliary contact		3P	2 NO+2 NC								
		4P	-								

Control circuit	Contactor model			NXC-120	NXC-160	NXC-185	NXC-225	NXC-265	NXC-330	NXC-400	NXC-500	NXC-630
Main circuit connection	Cable connection (mm^2)	Prefabricated flexible wire	1	10~150								
			2	10~75								
		Hard wire	1	10~150			50~240					
			2	10~75			50~240					
	Size of fastening screw			M6	M8		M10					
	Tightening torque (N·m)			10			14					
Control circuit connection	Cable connection (mm^2)	Prefabricated flexible wire	1	1~4								
			2	1~2.5								
		Hard wire	1	1~4								
			2	1~4								
	Size of fastening screw			M3.5								
	Tightening torque (N·m)			0.8								

Contactor model		NXC-120	NXC-160	NXC-185	NXC-225	NXC-265	NXC-330	NXC-400	NXC-500	NXC-630
Coil control power supply	AC 50Hz	110, 127, 220, 230, 240, 380				Common for AC and DC: 110, 127, 220, 230, 240, 380				
	DC	-								
Control voltage	Pull-in	(75%~120%)Us				(75%~120%)Us				
	Release	(20%~70%)Us				(10%~70%)Us				
Coil average power (VA)	Start	500				600			800	
	Hold	50				11			11	
Heat dissipation (W)	AC	30~50				3~6			3~7	
	DC	-				3~6			3~7	

«Электро-Профи» - www.ep.ru

Accessories

Accessory diagrams

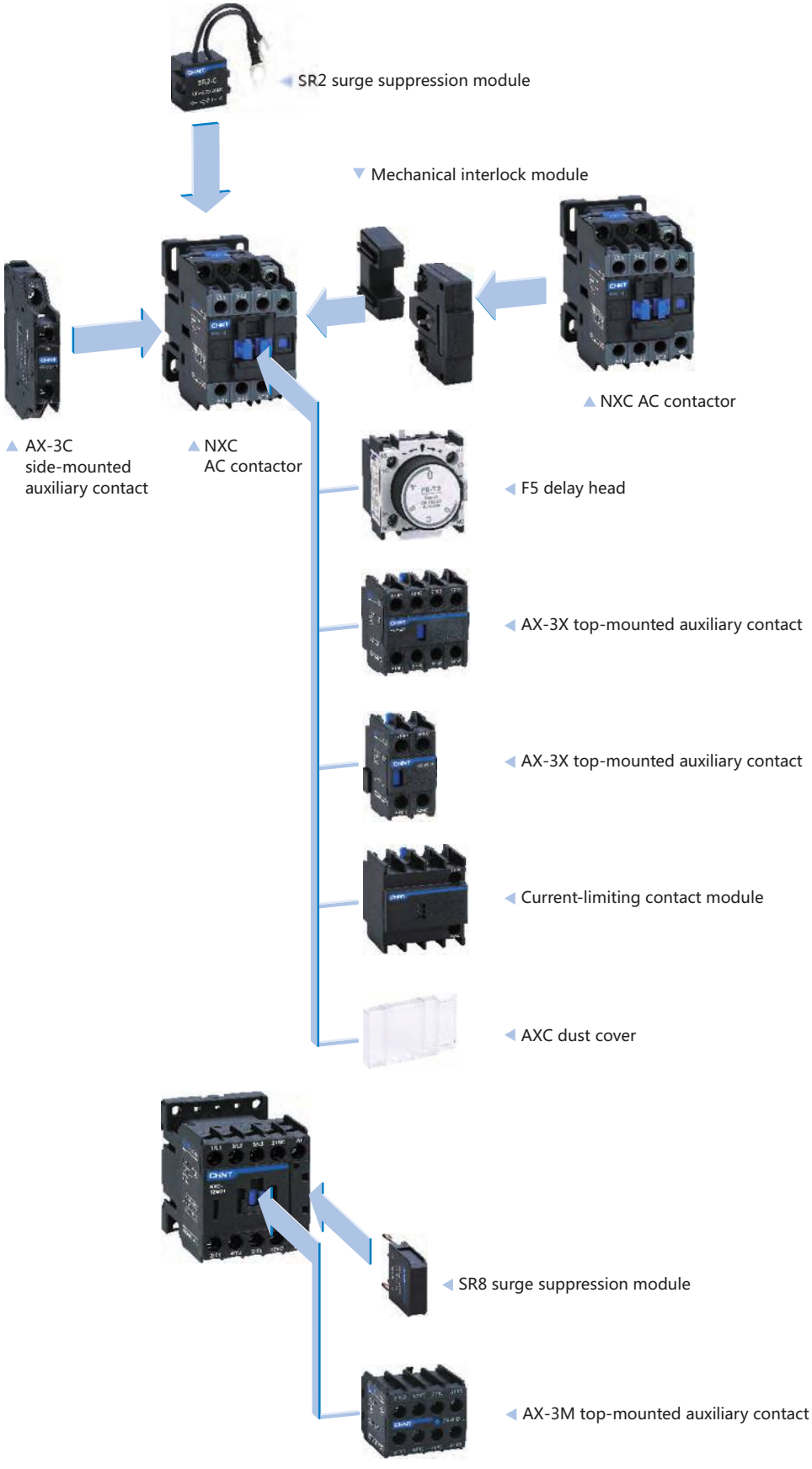

«Электро-Профи» - www.ep.ru

Accessory Description

Top-mounted auxiliary contact

AX - 3X	/	11	AX - 3M	/	11
Auxiliary contact model		NO and NC auxiliary contact combination	Auxiliary contact model		NO and NC auxiliary contact combination
Applicable to 6A-630A AC contactor product		11, 20, 02 22, 13, 31 04, 40	Applicable to NXC-06M ~12M AC contactor product		11, 20, 02 22, 13, 31 04, 40

Side-mounted auxiliary contact

AX - 3C	/	11	B
Side-mounted auxiliary contact model		NO and NC contact combination	None: Standard model, applicable to 6A~225A AC contactor
		11	B: Expanded model, applicable to 265A~630A AC contactor

Dust cover

AXC	-	1
Dust cover		1: Used for NXC-06~22, NXC-120~630 2: Used for NXC-25~38 3: Used for NXC-40~65 4: Used for NXC-75~100

Air delay head

F5	/	T	4
Air delay head model		Delay type	Delay range
		T: Power-on delay D: Power-off delay	0: 0.1~3s 2: 0.1~30s 4: 10~180s

«Электро-Профи» - www.ep.ru

Accessory selection table (auxiliary contact)

Contactor	Optional accessory	Accessory model	Contact combination
NXC-06M~12M	AX-3M top-mounted auxiliary contact	AX-3M/20	2NO+0NC
		AX-3M/11	1NO+1NC
		AX-3M/02	0NO+2NC
		AX-3M/40	4NO+0NC
		AX-3M/31	3NO+1NC
		AX-3M/22	2NO+2NC
		AX-3M/13	1NO+3NC
		AX-3M/04	0NO+4NC
NXC-06~225	AX-3X top-mounted auxiliary contact	AX-3X/20	2NO+0NC
		AX-3X/11	1NO+1NC
		AX-3X/02	0NO+2NC
		AX-3X/40	4NO+0NC
		AX-3X/31	3NO+1NC
		AX-3X/22	2NO+2NC
		AX-3X/13	1NO+3NC
		AX-3X/04	0NO+4NC
	AX-3C side-attached auxiliary contact	AX-3C/11	1NO+1NC
NXC-265~630	AX-3X top-mounted auxiliary contact	AX-3X/20	2NO+0NC
		AX-3X/11	1NO+1NC
		AX-3X/02	0NO+2NC
		AX-3X/40	4NO+0NC
		AX-3X/31	3NO+1NC
		AX-3X/22	2NO+2NC
		AX-3X/13	1NO+3NC
		AX-3X/04	0NO+4NC
	AX-3C side-attached auxiliary contact	AX-3C/11B	1NO+1NC

Accessory selection table (air delay head)

Contactor	Optional accessory	Accessory model	Contact combination	Delay range (s)
NXC full series (except for NXC-06M~12M)	F5 air delay head	F5-T0	1NO+1NC	0.1~3
		F5-T2	1NO+1NC	0.1~30
		F5-T4	1NO+1NC	10~180
		F5-D0	1NO+1NC	0.1~3
		F5-D2	1NO+1NC	0.1~30
		F5-D4	1NO+1NC	10~180

Accessory selection table (dust cover)

Contactor	Optional accessory
NXC-06~22、NXC-120~630	AXC-1 dust cover
NXC-25~38	AXC-2 dust cover
NXC-40~65	AXC-3 dust cover
NXC-75~100	AXC-4 dust cover

«Электро-Профи» - www.ep.ru

Main parameters and technical performance indicators of accessories

Item			Main technical parameters	
Rated operation current (V)			To 690	
Rated insulation voltage (V)			690	
Conventional thermal current Ith (A)			10	
Rated making capacity (A)			Breaking current 10 Ie (AC-15) or Ie (DC-13)	
Short-circuit protection			gG fuse: 10A	
Control capacity	Auxiliary contact	AC-15	380V/400V/415V	1.5A
		DC-13	220V/230V/240V	0.3A
	F5 air delay head	AC-15	660V/380V	0.52A/0.95A
		DC-13	220V	0.15A
Compliant standards			IEC/EN 60947-5-1	
Product certification			CE	
Enclosure protection degree			IP 20	
Cable connection (mm^2)	Flexible wire without cold-pressed terminal		1~4	
			1~4	
	Flexible wire with cold-pressed terminal		1~4	
			1~2.5	
	Hard wire		1~4	
			1~4	
Fastening screw size			M3.5, M3 (AX-3M)	
Tightening torque (N·m)			0.8	

Derivative products

Name	Reversible AC contactor
Reversible AC contactor	

«Электро-Профи» - www.ep.ru

Dimensions and installation

NXC-06M-12M

Dimensions and installation



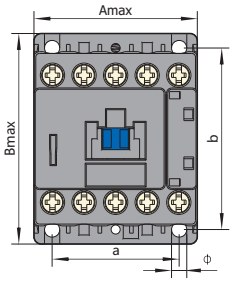

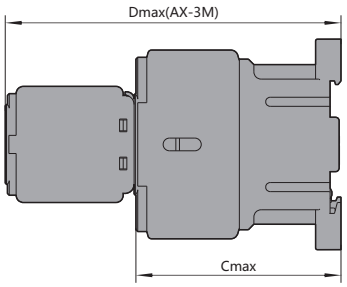

Model	Amax	Bmax	Cmax	Dmax	a	b	Φ
NXC-06M-12M	45.5	59	58	94	35±0.35	50±0.48	4.2
NXC-06M/4-12M/4	45.5	59	58	94	35±0.35	50±0.48	4.2
NXC-06M/Z-12M/Z	45.5	59	70	106	35±0.35	50±0.48	4.2
NXC-06M/4/Z-12M/4/Z	45.5	59	70	106	35±0.35	50±0.48	4.2

NXC-06-22

Dimensions and installation



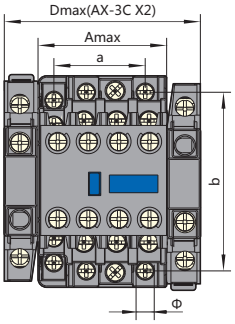

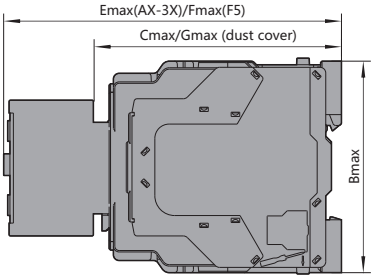

NXC-25-100

Dimensions and installation



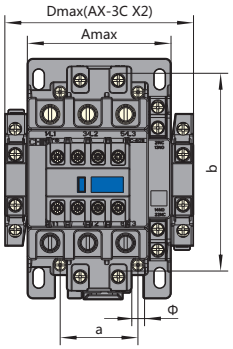

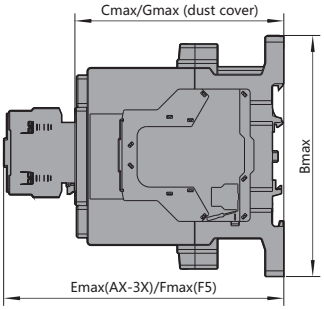

Model	Amax	Bmax	Cmax	Dmax	Emax	Fmax	Gmax	a	b	Φ
NXC-06-22	45.5	75	88	70	126.5	146.5	90	35±0.31	62±0.31	4.5
NXC-25-38	56.5	87	93	81	131.5	151.5	95	40±0.31	48±0.31	4.5
NXC-40-65	77	129	118	102	156.5	176.5	121	40±0.31	105±0.31	6.5
NXC-75-100	87	132	127	112	165.5	185.5	129	40±0.28	105±0.57	6.5

«Электро-Профи» - www.ep.ru

NXC-120-225

Dimensions and installation



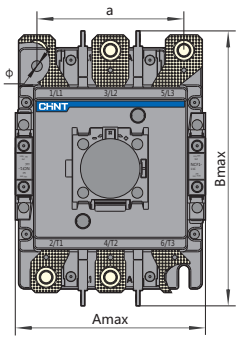

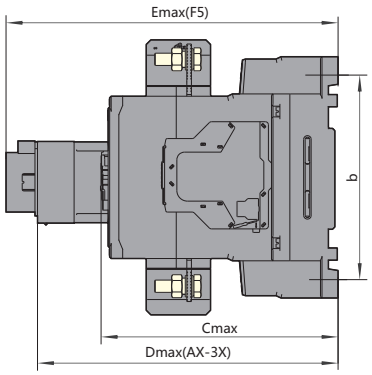

NXC-265-400

Dimensions and installation



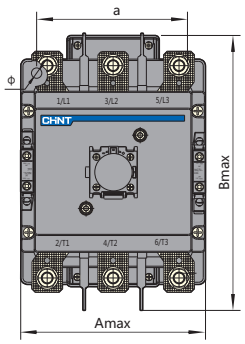

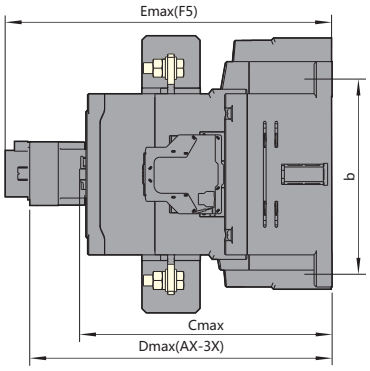

NXC-500-630

Dimensions and installation



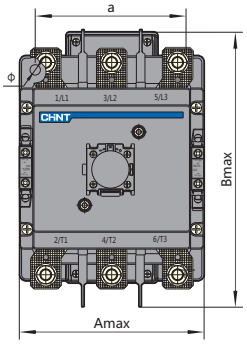

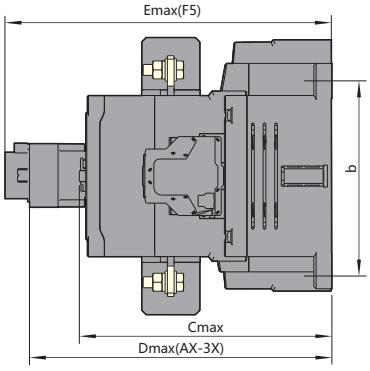

Model	Amax	Bmax	Cmax	Dmax	Emax	a	b	Φ
NXC-120-225	127	182	158	196.5	216.5	96±0.5	133.6±0.8	7
NXC-265-400	150	236	207	245.5	265.5	120±0.5	180±0.8	9
NXC-500-630	165	248	225	263.5	283.5	130±0.5	180±0.8	9

«Электро-Профи» - www.ep.ru

Wiring diagrams

NXC-06~100

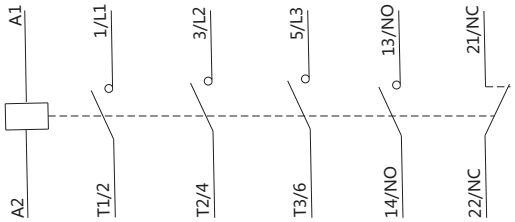

NXC-120~630

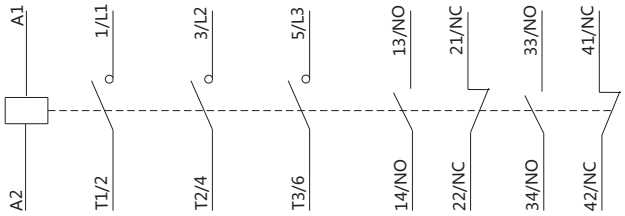

AX-3X/11

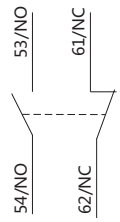

AX-3X/20

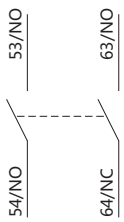

AX-3X/02

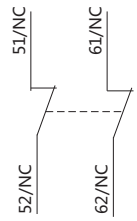

AX-3X/22

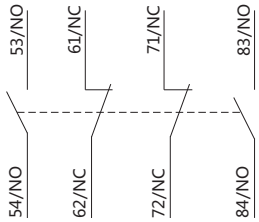

AX-3X/13

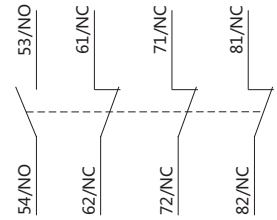

AX-3X/40

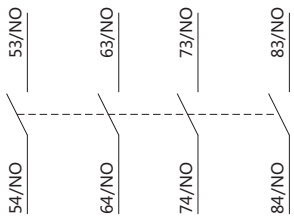

«Электро-Профи» - www.ep.ru

AX-3X/04

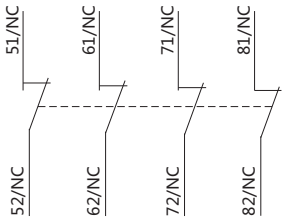

AX-3X/31

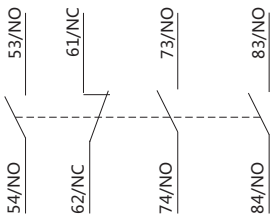

AX-3M/11

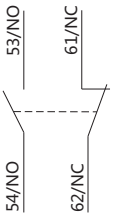

AX-3M/20

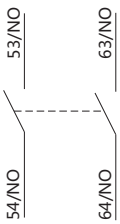

AX-3M/02

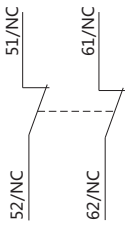

AX-3M/22

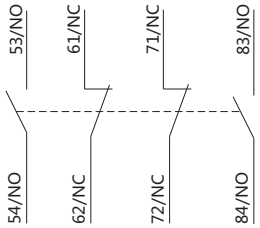

AX-3M/13

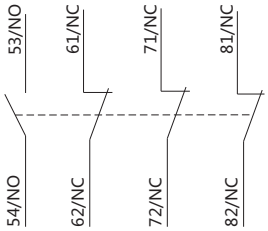

AX-3M/40

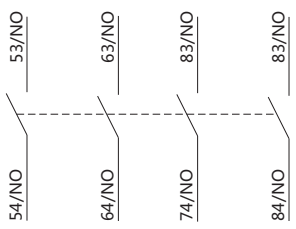

AX-3M/04

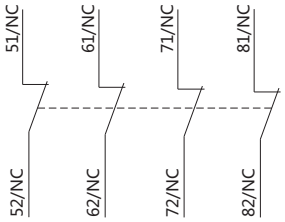

AX-3M/31

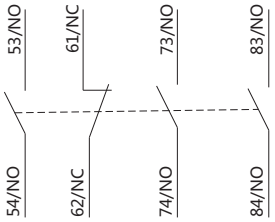

«Электро-Профи» - www.ep.ru

Annex I: Instructions for use in abnormal conditions

Instructions for use of correction factors in high altitude areas

- IEC/EN 60947-4-1 standard defines the relation between altitude and impulse withstand voltage. An altitude of 2000 m above sea level or lower has no significant impact on product performance.
- At an altitude higher than 2000 m, air cooling effect and decease of rated impulse withstand voltage have to be considered. In this case, design and use of products have to be negotiated by the manufacturer and the user.
- The correction factors for rated impulse withstand voltage and rated operation current for altitudes higher than 2000 m are given in the following table. The rated operation voltage remains unchanged.

Altitude (m)	2000	3000	4000
Rated impulse withstand voltage correction factor	1	0.88	0.78
Rated operation current correction factor	1	0.92	0.9

Instructions for use under abnormal ambient temperature

- IEC/EN 60947-4-1 standard defines normal operation temperature range for products. Use of products in the normal range will not cause sig-nificant impact on their performance.
- At an operation temperature higher than +40℃, the tolerable temperature rise of products needs to be reduced. Both rated operation current and number of contactors in standard products have to be decreased to prevent product damage, shortened service life, lower reliability, or impact on control voltage. At a temperature lower than -5℃, freezing of insulation and lubrication grease should be considered to prevent action failures. In these cases, design and use of products have to be negotiated by the manufacturer and the user.
- The correction factors for different rated operation current under operation temperature higher than +55℃ are given in the following table. The rated operation voltage remains unchanged.

Ambient temperature (℃)	55	60	65	70
Correction factor	1	0.93	0.875	0.75

- At the temperature range of +55℃~+70℃, the pull-in voltage range of AC contactors is (90%~110%)Us, and (70%~120%)Us is the results of cold status tests at 40℃ ambient temperature.

Instructions for derating during use in corrosive environment

- **Impact on metal parts**

  Chlorine Cl_2, nitrogen dioxide NO_2, hydrogen sulfide H_2S, sulfur dioxide SO_2

  Copper: The thickness of copper sulfide coating in chlorine environment will be twice that in normal environment conditions. This is also the case for environments with nitrogen dioxide.

  Silver: When used in SO_2 or H_2S environment, the surface of silver or silver coated contacts will become dark due to formation of a silver sulfide coating.

  This will lead to higher contact temperature rise and may damage to the contacts.

  In humid environments where Cl_2 and H_2S coexist, the coating thickness will increase by 7 times. With presence of both H_2S and NO_2, the silver sulfide thickness will increase by 20 times.

- **Considerations during product selection**

  In refinery, steel, paper, artificial fiber (nylon) industry or other industries using sulphur, equipment may experience vulcanization (also called oxidization in some industrial sectors). Equipment installed in machine rooms is not always well protected from oxidization. Short inlets are often used to ensure that the pressure in such rooms is slightly higher than atmospheric pressure, which helps reduce pollutions due to external factor to a certain degree. However, after operation for 5 to 6 years, the equipment still experience rust and oxidization inevitably.

  Hence in operation environments with corrosive gas, the equipment needs to be used with derating. The derating coefficient relative to the rated value is 0.6 (up to 0.8). This helps reduce rate of accelerated oxidization due to temperature rise.

Instructions for use with parallel poles

- In case of parallel poles, the rated current of such poles needs to be corrected to make up for distribution of long-term unstable current, as shown in the table below:

Number of parallel poles	2	3	4
Correction factor	1.6	2.25	2.8

«Электро-Профи» - www.ep.ru

Annex Ⅱ: Utilization category description

Different types of power-consuming equipment may have significantly different loading characteristics and current changes during making/breaking, hence they have different requirements for contactors. IEC 60947-1 standard defines contactor utilization categories that are indicated by one or more of the following use conditions:

- Current, indicated with multiples of rated current
- Voltage, indicated with multiples of rated voltage
- Power factor or time constant
- Short-circuit performance
- Selectivity
- Other use conditions (if applicable)

NXC AC contactors mainly include the following categories:

Utilization categories of AC main circuit

AC-1 type
This type is used for AC loads with a power factor higher than or equal to 0.95.
Examples: heating, power distribution.

AC-2 type
This type is used for start revere braking and inching of slip ring motors.
During closing, the contactor makes a start current that is about 2.5 times motor rated current.
During opening, the contactor must break the start current at a voltage lower than or equal to the main supply voltage.

AC-3 type
This type is used for breaking normally started squirrel cage motors.
During closing, the contactor makes a start current that is about 7 times motor rated current.
During opening, the contactor breaks motor rated current. In this case, the voltage at the contactor wire terminal is about 20% of main supply voltage. The breaking process is not harsh.
Examples: all standard squirrel cage motors such as those in elevator, escalator, conveyance belt, air compressor, pump, mixer, and air conditioner.

AC-4 type
This type is used for reverse braking and inching of squirrel motors and sling ring motors.
The contactor makes a current that is 5 to 7 times rated motor current, and breaks the same current at higher voltage. At lower motor RPMs, the voltage breaking is as harsh as main voltage.
Examples: printing machinery, wire drawing machine, tower crane, crane, metallurgy

Control circuit utilization categories.

DC-13 type
This type of system is used for starting, reverse current braking, and inching of DC shunt excited machines. The duration is equal to or less than 2 ms.
This type is used for switching electromagnetic loads.

AC-15 type
This type is used for switching electromagnetic loads. The pull-in power during closing of electromagnet is higher than 72VA.
Examples: operation coil of switch contactors.

«Электро-Профи» - www.ep.ru







Overview

Applicable scope

NXR thermal overload relays (hereinafter abbreviated as thermal relays) are suitable for overload and phase loss protection for uninterrupted or intermittent AC motors with AC frequency of 50 Hz/60 Hz, a voltage up to 690 V, and a current of (0.1-630)A.
The thermal relays also provide temperature compensation, action indication, automatic and manual reset, stop, and testing functions. The products are characterized by stable and reliable performance. The thermal relays can be plugged into contactors or installed indepe-ndently.
Compliant standards: IEC/EN 60947-4-1, IEC/EN 60947-5-1.

Structural characteristics

- Three-phase bi-metal sheet type or electronic type (NXR-200, NXR-630), with a tripping level of 10A
- With phase loss protection
- With a device for continuous adjustment of setting current
- With temperature compensation
- With action indication
- With testing mechanism
- With stop bottom
- With manual and automatic reset button (NXR-200 and NXR-630 only have manual reset)
- With one NO contact and one NC contact that are electrically separable
- Installation method: Plugged into contactor (NXR-12, 25, 38, 100) or installed independently (NXR-200, 630)
- Protection characteristics

Operation environment

Type	Operation and installation conditions
Installation type	Ⅲ
Pollution degree	3
Compliant standards	IEC/EN 60947-4-1, IEC/EN 60947-5-1
Certification mark	CE
Enclosure protection degree	IP20 (NXR-12, 25, 38, 100)
Ambient temperature	Operation temperature limits: -35℃~+70℃. Normal operation temperature range: -5℃~+40℃. The 24-hour average temperature should not exceed +35℃. For use beyond the normal operation temperature range, see "Instructions for use in abnormal conditions" in the annex.
Altitude	Not exceeding 2000m above sea level
Atmospheric conditions	The relative humidity should not exceed 50% at the upper temperature limit of +70℃. A higher relative humidity is allowed at a lower temperature, e.g. 90% at +20℃. Special precautions should be taken against occasional condensation due to humidity variations.
Installation conditions	The angle between the installation surface and the vertical surface should not exceed ±5°.
Shock and vibration	The product should be installed in places without significant shaking, shock, and vibration.

«Электро-Профи» - www.ep.ru







Description

NXR	-	12	7 - 10A
Thermal overload relay model		Frame current	Setting current range
		12 25 38 100 200 630	See the table

Frame	Setting current
12	0.1-0.16A
	0.16-0.25A
	0.25-0.4A
	0.4-0.63A
	0.63-1A
	1-1.6A
	1.25-2A
	1.6-2.5A
	2.5-4A
	4-6A
	5.5-8A
	7-10A
	9-12A

Frame	Setting current
25	0.1-0.16A
	0.16-0.25A
	0.25-0.4A
	0.4-0.63A
	0.63-1A
	1-1.6A
	1.25-2A
	1.6-2.5A
	2.5-4A
	4-6A
	5.5-8A
	7-10A
	9-13A
	12-18A
	17-25A

Frame	Setting current
38	23-32A
	30-38A
100	23-32A
	30-40A
	37-50A
	48-65A
	55-70A
	63-80A
	80-93A
	80-100A
200	80-160A
	100-200A
630	125-250A
	200-400A
	315-630A

Selection example:
"NXR-25 7-10A" represents a NXR 3P thermal overload relay with a frame current class of 25 and a setting current range between 7A and 10A.

MB mounting base

	Type	Application
	MB-1	Incorporate with NXR-12 to be an independant mounted product
	MB-2	Incorporate with NXR-25 to be an independant mounted product
	MB-3	Incorporate with NXR-38 to be an independant mounted product
	MB-4	Incorporate with NXR-100 to be an independant mounted product

«Электро-Профи» - www.ep.ru

Quick selection and matching table

Product appearance	Rated current A	Specification of matching fuse (RT16 recommended) A	Model of matching contactor
		gG	
 NXR-12	0.1~0.16	2	 NXC-06M, 09M, 12M
	0.16~0.25	2	
	0.25~0.4	2	
	0.4~0.63	2	
	0.63~1	4	
	1~1.6	4	
	1.25~2	6	
	1.6~2.5	6	
	2.5~4	10	
	4~6	16	
	5.5~8	20	
	7~10	20	
	9~12	25	
 NXR-25	0.1~0.16	2	 NXC-06, 09, 12, 16, 18, 22, 25, 32, 38
	0.16~0.25	2	
	0.25~0.4	2	
	0.4~0.63	2	
	0.63~1	4	
	1~1.6	4	
	1.25~2	6	
	1.6~2.5	6	
	2.5~4	10	
	4~6	16	
	5.5~8	20	
	7~10	20	
	9~13	25	
	12~18	35	
	17~25	50	
 NXR-38	23~32	63	 NXC-25, 32, 38
	30~38	80	
 NXR-100	23~32	63	 NXC-40, 50, 65, 75, 85, 100
	30~40	100	
	37~50	100	
	48~65	100	
	55~70	125	
	63~80	125	
	80~93	160	
	80~100	160	
 NXR-200	80~160	315	 NXC-120, 160, 185, 225
	125~200	315	
 NXR-630	125~250	800	 NXC-225, 265, 330, 400, 500, 630
	200~400	800	
	315~630	800	

«Электро-Профи» - www.ep.ru

Parameters

Item			NXR-12	NXR-25	NXR-38	NXR-100	NXR-200	NXR-630
Current level			12	25	38	100	200	630
Rated insulation voltage V			690	690	690	690	690	690
Rated impulse withstand voltage V			6000	6000	6000	6000	6000	6000
Enclosure protection degree			IP20	IP20	IP20	IP20	-	-
Phase loss protection			Yes	Yes	Yes	Yes	Yes	Yes
Manual and automatic reset			Yes	Yes	Yes	Yes	Manual	Manual
Temperature compensation			Yes	Yes	Yes	Yes	Yes	Yes
Trip indication			Yes	Yes	Yes	Yes	Yes	Yes
Test button			Yes	Yes	Yes	Yes	Yes	Yes
Stop button			Yes	Yes	Yes	Yes	Yes	Yes
Installation method			Plugged	Plugged	Plugged	Plugged	Independent	Independent
Integrated auxiliary contact			1NO+1NC	1NO+1NC	1NO+1NC	1NO+1NC	1NO+1NC	1NO+1NC
AC-15 380V/400V/415V rated current A			1.5	1.5	1.5	1.5	1.5	1.5
DC-13 220V rated current A			0.2	0.2	0.2	0.2	0.2	0.2
Conductor cross section mm^2	Main circuit	Single-core or stranded wire	1~4	1~6	4~10	4~35	25~95	50~2×185
		Wiring screw	M3.5	M4	M4	M10	M8	M10
		Tightening torque (N·m)	0.8	0.8	0.8	0.8	1.2	1.2
	Auxiliary circuit	Single-core or stranded wire	1~2.5	1~2.5	1~2.5	1~2.5	1~2.5	1~2.5
		Wiring screw	M3.5	M3.5	M3.5	M3.5	M3.5	M3.5
		Tightening torque (N·m)	1.2	1.7	1.7	10	10	20

Protection characteristics

Item	No.	Multiples of setting current		Action time	Test conditions
Overload protection	1	1.05		Without action in 2 hours	Start from cold state
	2	1.2		Act within 2 hours	Start from hot state (after No. 1)
	3	1.5		Act within 2 minutes	Start after thermal equilibrium is reached under setting current
	4	7.2		2s < Tp≤10s	Start from cold state
Phase loss protection	5	Any two phases	The other phase	Without action in 2 hours	Start from cold state
		1.0	0.9		
	6	1.15	0	Act within 2 hours	Start from hot state (after No. 5)

Trip characteristics

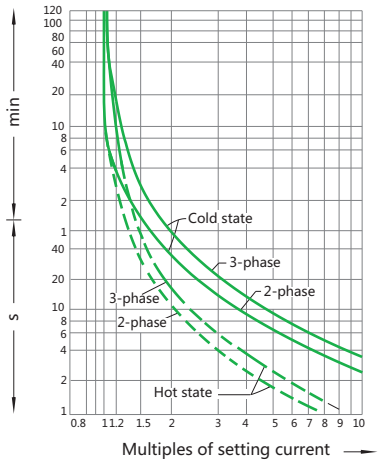

Thermal relay time Vs current characteristics curve (+20℃)

«Электро-Профи» - www.ep.ru

Product front view

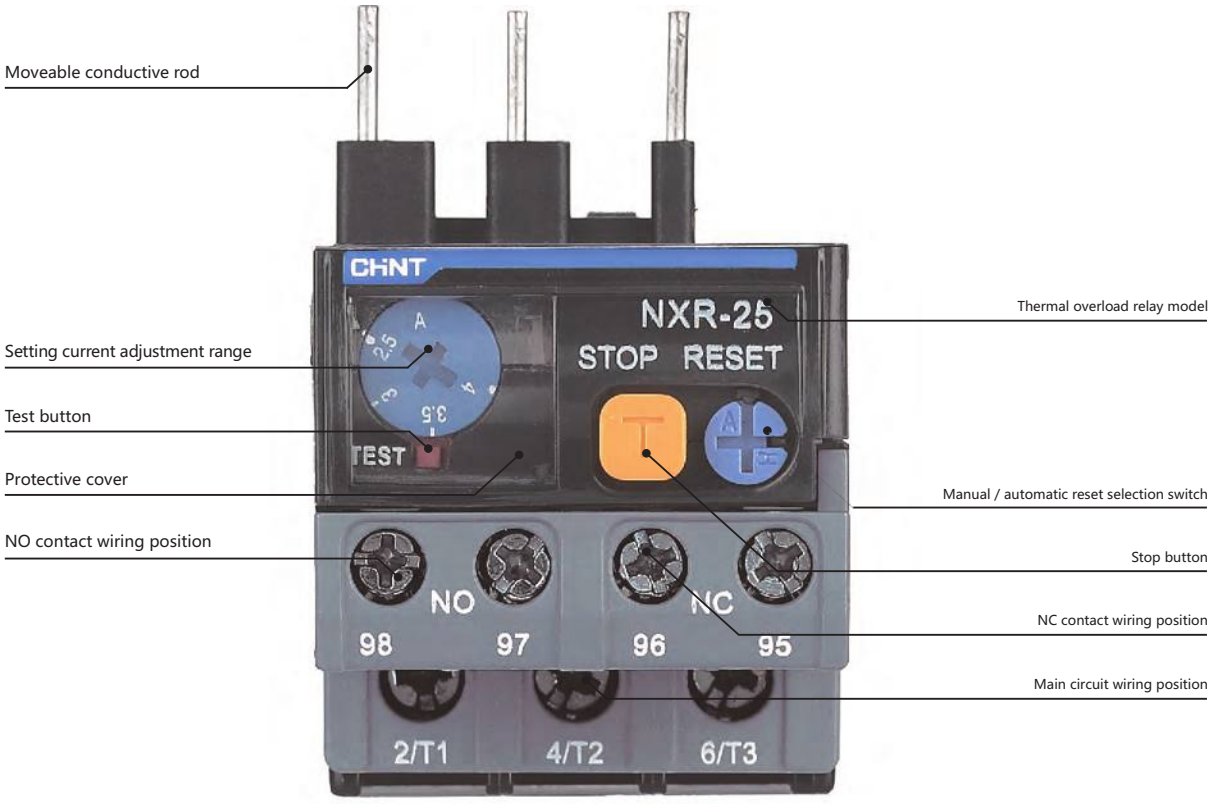

Dimensions and installation

NXR-12

Dimensions and installation



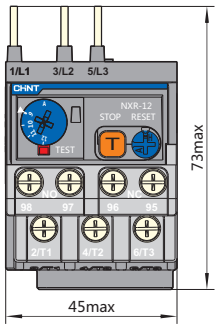

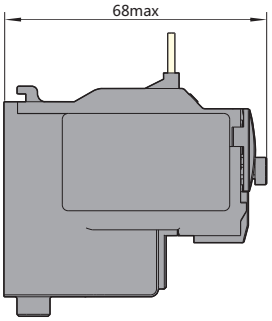

«Электро-Профи» - www.ep.ru

NXR-25

Dimensions and installation



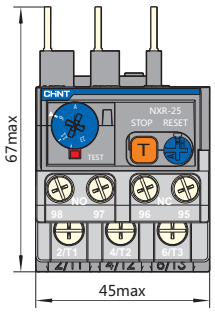

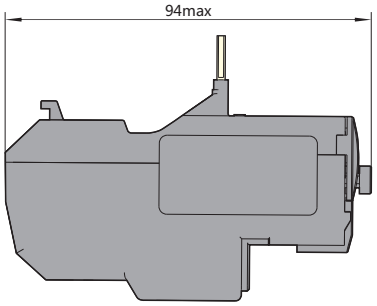

NXR-38

Dimensions and installation



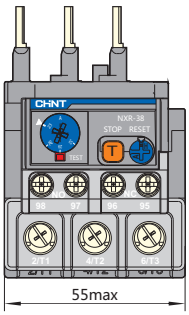

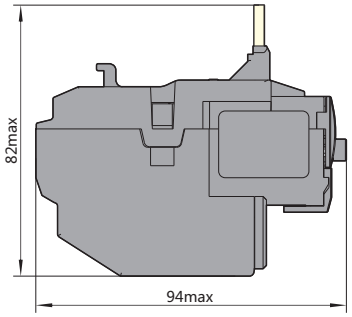

NXR-100

Dimensions and installation



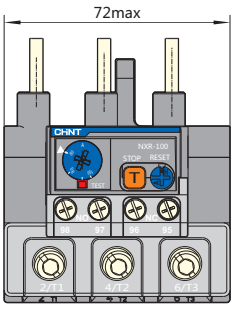

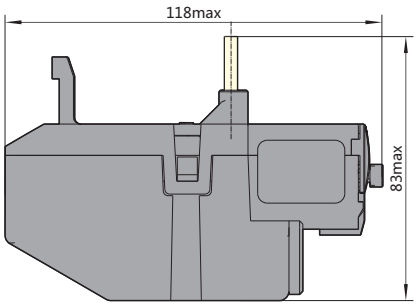

«Электро-Профи» - www.ep.ru

NXR-200

Dimensions and installation



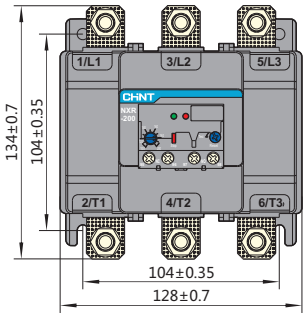

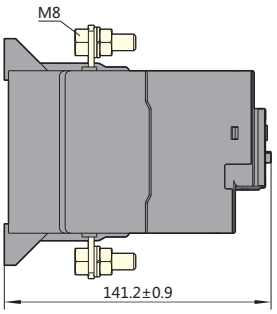

NXR-630

Dimensions and installation



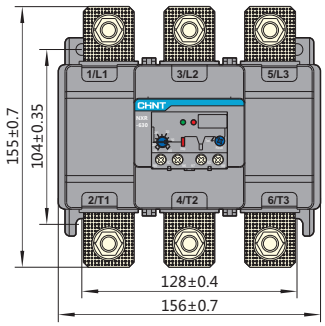

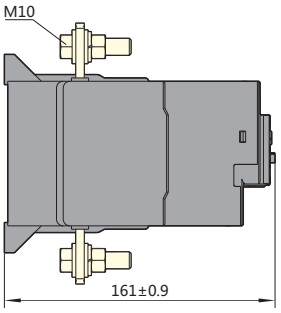

Sizes of combination with contactors

NXC-06M + NXR-12

Dimensions and installation

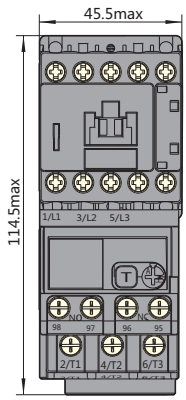

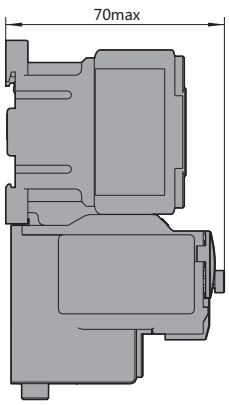

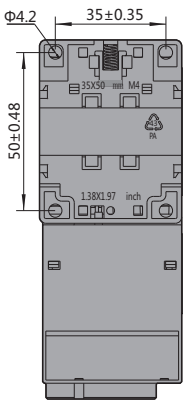

«Электро-Профи» - www.ep.ru

NXC-09 + NXR-25

Dimensions and installation

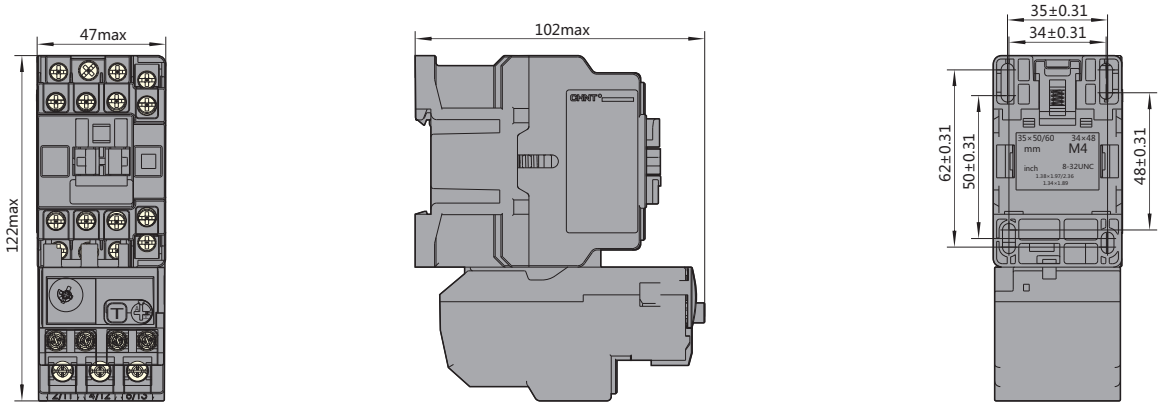

NXC-18 + NXR-25

Dimensions and installation

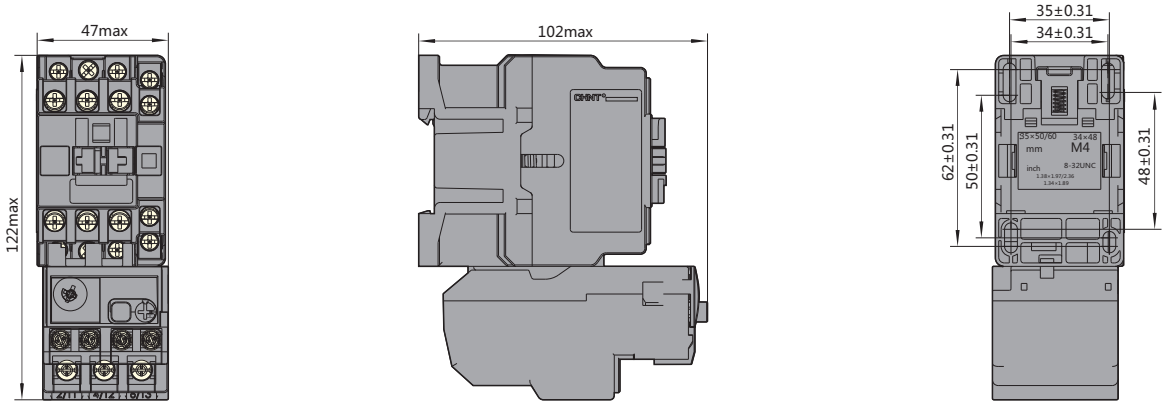

NXC-38 + NXR-25

Dimensions and installation

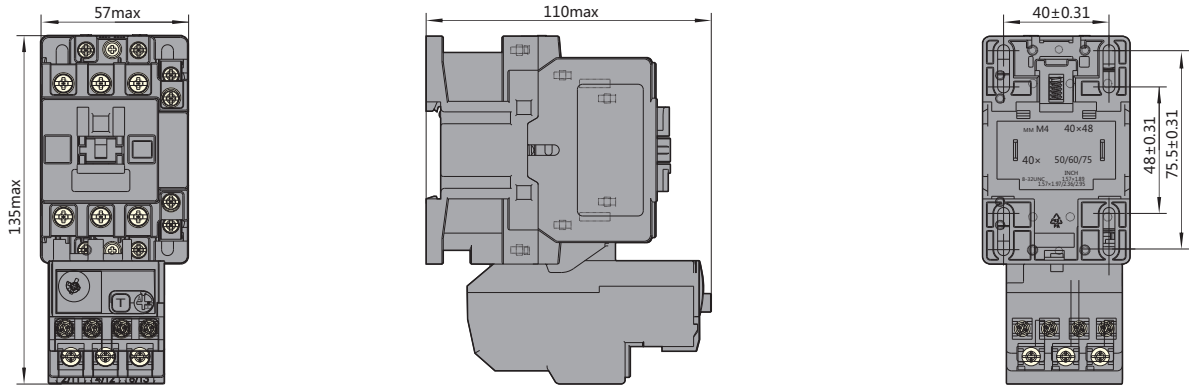

«Электро-Профи» - www.ep.ru

NXC-38 + NXR-38

Dimensions and installation

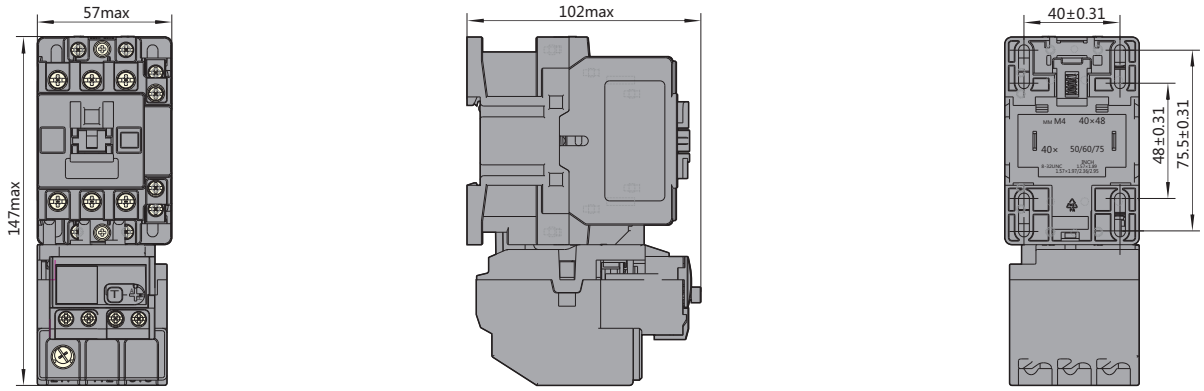

NXC-40 + NXR-100

Dimensions and installation

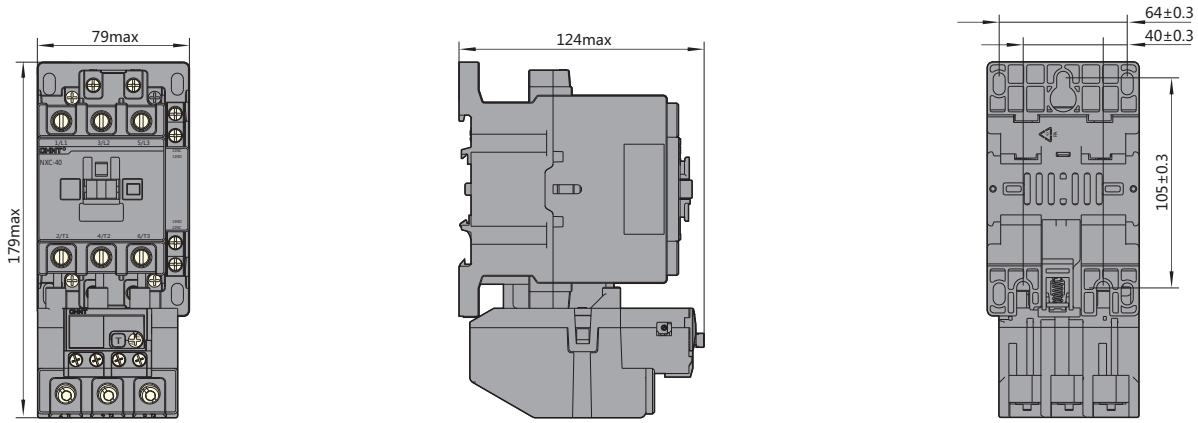

NXC-75 + NXR-100

Dimensions and installation

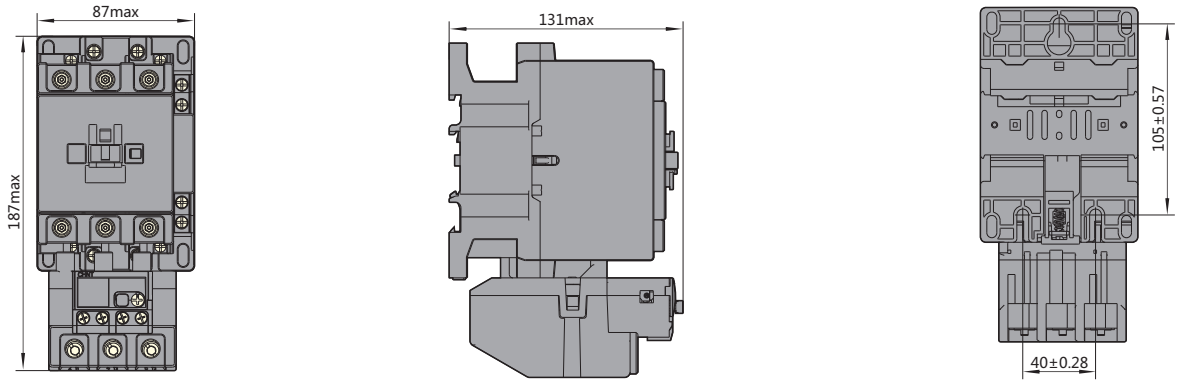

«Электро-Профи» - www.ep.ru

Wiring diagrams

NXR-12~100

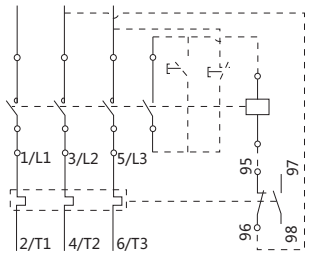

NXR-200~630

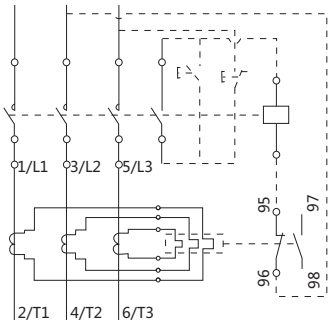

O

Annex I: Instructions for use in abnormal conditions

- IEC/EN 60947-4-1 standard defines normal operation temperature range for products. Use of products in the normal range will not cause significant impact on their performance.
- At an operation temperature higher than +40℃, the tolerable temperature rise of products needs to be reduced. The rated operation current should be adjusted to prevent product damage, shortened service life, lower reliability, or impact on action characteristics.At a temperature lower than -5℃, impact of changes to the heat dissipation system on the action characteristics of the products should be considered.
- The temperature compensation coefficients at an ambient temperature higher than +40℃ and lower than -5℃ are given below. The compensation coefficients corresponding to -35℃ and +70℃ environments are given in the table below. No corrections are required for NXR-200 and NXR-630.

Operation ambient temperature		-35℃	+70℃
Temperature compensation coefficients for NXR-12, 25, 38, 100	Multiple of stable current	1.05	0.9
	Multiple of trip current	1.4	1.2

NXR-12, 25, 38, 100

Temperature compensation curve

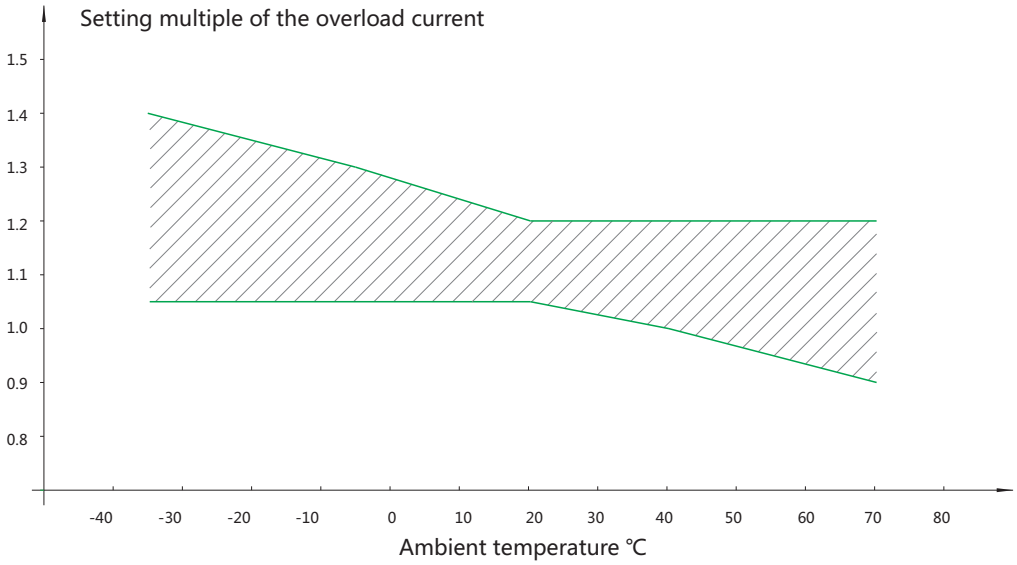

«Электро-Профи» - www.ep.ru



Overview

Applicable scope

- NXRC contactor relay is mainly used in AC 50Hz or 60Hz relay control circuit, signal transmission circuit and isolation amplifier circuit with a maximum rated operational voltage of 380V and a maximum DC rated voltage of 220V.
- Applicable standard: IEC/EN60947-5-1.

Description

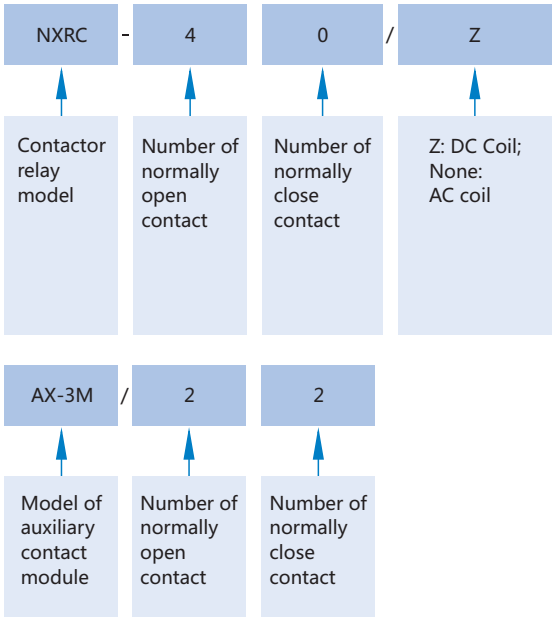

NXRC contact combination form

Model	Number of normally open contact	Number of normally closed contact
NXRC-04、NXRC-04/Z	0	4
NXRC-13、NXRC-13/Z	1	3
NXRC-22、NXRC-22/Z	2	2
NXRC-31、NXRC-31/Z	3	1
NXRC-40、NXRC-40/Z	4	0

Combination form of AX-3M auxiliary contact module

Model	Number of normally open contact	Number of normally closed contact
AX-3M/04	0	4
AX-3M/13	1	3
AX-3M/22	2	2
AX-3M/31	3	1
AX-3M/40	4	0
AX-3M/11	1	1
AX-3M/20	2	0
AX-3M/02	0	2

Model example:
NXRC-40 220V 50Hz means the contactor relay of which the contact combination form is quadrupole normally open, coil control voltage is AC 220V, and frequency is 50Hz.

«Электро-Профи» - www.ep.ru

Normal working conditions and installation conditions

- Surrounding ambient temperature: -5°C~+40°C; the mean value does not exceed +35°C within 24 hours.
- Sea level elevation: not exceed 2000m.
- Atmospheric conditions: The relative humidity shall not exceed 50% when the maximum temperature is +40°C; the relative humidity can be higher when the temperature is lower; for example, at 20°C, the relative humidity can be 90%. Special measures shall be taken if there is condensation caused accidently owing to temperature changes.
- Class of pollution: class 3.
- Installation category: category Ⅲ
  Installation condition: angle of slope between the mounting surface and vertical plane is not bigger than ±5°.
- Impact and vibration: The product shall be installed and used in the place without serious shaking, shock, and vibration.

Parameters

Main technical parameters

Rated insulation voltage (Ui)	Conventional free air thermal current (Ith)	Rated control capacity				Operating frequency (times/h)	Electrical endurance (10k times)	Mechanical endurance (10k times)
		Utilization category	Rated operational voltage	Rated operational current	Control capacity			
690V	10A	AC-15	380V	1.5A	570VA	1200	100	1000
		DC-13	220V	0.3A	66W			

Rated control power supply voltage of coil (Us)

- AC: 24V, 36V, 48V, 110V, 127V, 220V, 380V, 415V
- DC: 24V, 48V, 110V, 220V
- Actuation range: Pull-in voltage (85%~120%) Us, +40°C
- Release voltage is AC: (20%~75%) Us, DC: (10%~75%) Us (-5°C)

Structural feature

- Derived from NXC-06M series, the overall dimension and installation dimension are the same as NXC-06M; AX-3M auxiliary contact can be hung from it.
- The product has a small size, and has AC and DC operating coils.

Dimensions and installation

NXRC

Overall Dimension and Installation Dimension



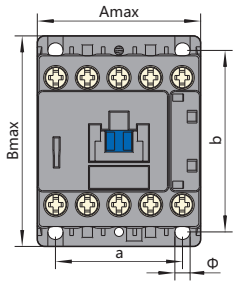

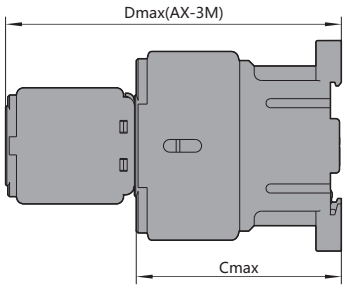

Model	Amax	Bmax	Cmax	Dmax	a	b	Φ
NXRC-40、31、22、13、04	45.5	59	58	94	35±0.35	50±0.48	4.2
NXRC-40/Z、31/Z、22/Z、13/Z、04/Z	45.5	59	70	106	35±0.35	50±0.48	4.2

Ordering instructions

- When an order is placed, please indicate the product name and model, rated operational voltage and frequency of the coil, and amount of order.
- Example of order: NXRC-40/Z contactor relay; coil voltage: DC 24V 10 sets.

«Электро-Профи» - www.ep.ru









Overview

Applicable scope

Three types of contacts (2Z, 3Z, and 4Z): complete range of AC/DC models; high contact relia-bility, applicable to PLC control; transparent dust cover encapsulation; supplied with sockets; status indicators with optional specifications.

Normal operation conditions and installation conditions

Temperature range	-40℃~+70℃
Relative humidity	Up to 95% at +25℃
Atmospheric pressure	86kPa~106kPa
Operation position	Any

Description

NXJ	-	A	220V	-	2Z	1	D
Relay model		Coil type	Coil voltage		Contact form	Connection method	Additional function
		A: AC None: DC	DC: 5V, 6V, 12V, 24V, 36V, 48V, 110V, 127V, 220V AC: 6V, 12V, 24V, 36V, 48V, 110V, 127V, 220V, 240V, 380V, 400V, 415V		2Z: Switching between two groups 3Z: Switching between three groups 4Z: Switching between four groups 2ZH: Switching between two groups with big current	1: Directly plugged 6: Welded	None: Standard product D: With status indicator B: With status indicator and surge suppressor (DC) M: With arc isolator, only for 4Z contact

Model example:

NXJ-A220-2Z1D represents the following relay: rated control coil voltage: AC220V; contact form: switching between two groups (1NO + 1NC for each contact group, contact rated ope-ration current 5A); directly plugged, with indicator function.

«Электро-Профи» - www.ep.ru

Parameters

Contact parameters

Contact form	2Z (C), 3Z (C), 4Z (C), 2ZH(C)
Initial contact resistance	50mΩ
Contact material	Silver alloy
Contactload(cosΦ=1.0)	2Z, 3Z: 5A; 4Z: 3A; 2ZH: 10A (240VAC/28VDC)
Maximum switch voltage	250VAC/30VDC
Maximum switch current	2Z, 3Z: 5A; 4Z: 3A; 2ZH: 10A
Maximum switch power	2Z, 3Z: 1250VA/140W, 2ZH: 2200VA/280W
	4Z: 750VA/84W
Electrical life (cycles)	$1.2x10^{5}$* (see the safety certification report for details)
Mechanical life (cycles)	$2×10^{7}$

Performance and characteristics parameters

Insulation resistance		1000MΩ (500VAC)
Dielectric strength	Between contact coils	1500VAC, 1min
	Between broken contacts	1000VAC, 1min
Action time		≤15ms
Release time		≤15ms
Impulse (stability)		Acceleration 100m/s^2, pulse duration:11ms
Vibration		Dual-amplitude 1mm, (10~55)Hz
Form of leading-out end		Directly plugged, welded
Dimensions (mm)		27.5×21.5×35.5

Coil parameters

Rated power	0.9~1W, 1.2~1.8VA
Pull-in voltage	DC≤75% rated voltage; AC: ≤80% rated voltage
Release voltage	DC≥10% rated voltage; AC: ≥20% rated voltage
Maximum voltage	120% rated voltage

Specification parameters

Rated voltage VDC	Action voltage VDC (≤)	Release voltage VDC (≥)	Coil resistance (20℃) Ω
5	3.75	0.5	28×(1±10%)
6	4.5	0.6	40×(1±10%)
12	9.0	1.2	160×(1±10%)
24	18.0	2.4	640×(1±10%)
36	27.0	3.6	1440×(1±15%)
48	36.0	4.8	2200×(1±15%)
110	82.5	11.0	14500×(1±15%)
127	95.3	12.7	17000×(1±15%)
220	165.0	22.0	39000×(1±15%)

Rated voltage VAC	Action voltage VAC (≤)	Release voltage VAC (≥)	Coil resistance (20℃) Ω
6	4.8	1.2	10.5×(1±10%)
12	9.6	2.4	44×(1±10%)
24	19.2	4.8	180×(1±10%)
36	28.8	7.2	380×(1±10%)
48	38.4	9.6	650×(1±10%)
110	88.0	22	3670×(1±15%)
127	101.6	25.4	4100×(1±15%)
220/230/240	176.0	44	15800×(1±15%)
380	304.0	72	39000×(1±15%)
400	320	80	43000×(1±15%)
415	332	83	46000×(1±15%)

«Электро-Профи» - www.ep.ru

Accessories

Supplied sockets (optional)

Relay model	NXJ/2Z (D)		
Supplied socket model	RS-NXJ-2Z/C1	RS-NXJ-2Z/C2	RS-NXJ-2Z/C3
Socket dimensions (mm)	72×23×31	72×23×31	63×30.5×26
Socket lead form	Screw type wiring terminal (device type, rail type)		

Relay model	NXJ/3Z (D)		
Supplied socket model	RS-NXJ-3Z/C1	RS-NXJ-3Z/C2	RS-NXJ-3Z/C3
Socket dimensions (mm)	72×30×31	72×30×31	63×30.5×26
Socket lead form	Screw type wiring terminal (device type, rail type)		

Relay model	NXJ/4Z (D)		
Supplied socket model	RS-NXJ-4Z/C1	RS-NXJ-4Z/C2	RS-NXJ-4Z/C3
Socket dimensions (mm)	72×30×31	72×30×31	63×30.5×26
Socket lead form	Screw type wiring terminal (device type, rail type)		

Relay model	NXJ-2ZH (D)	
Supplied socket model	RS-NXJ-2ZH/C1	RS-NXJ-2ZH/C2
Socket dimensions (mm)	72X23X31	79X29X33
Socket lead form	Screw type wiring terminal (device type, rail type)	

Connection socket and fixing hook

Model \ type	Normal	With finger protection	With indication sign
NXJ/2Z □	RS-NXJ-2Z/C1	RS-NXJ-2Z/C2	RS-NXJ-2Z/C3
NXJ/3Z □	RS-NXJ-3Z/C1	RS-NXJ-3Z/C2	RS-NXJ-3Z/C3
NXJ/4Z □	RS-NXJ-4Z/C1	RS-NXJ-4Z/C2	RS-NXJ-4Z/C3
Fixing hook	NG102	NG102	NG103

Dimensions and installation

Body dimensions and installation sizes

2ZH

Bottom wiring diagram

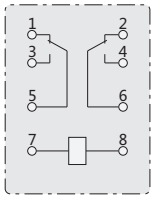

2ZH

Bottom wiring diagram (with indicator)

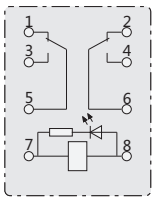

2ZH

Bottom wiring diagram (with indicator and diode)

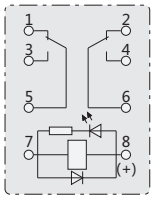

2ZH

Installation hole position

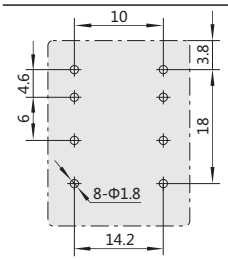

«Электро-Профи» - www.ep.ru

2Z

Bottom wiring diagram

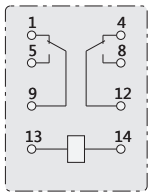

2Z

Bottom wiring diagram (with indicator)

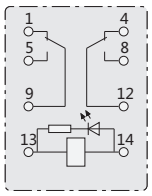

2Z

Bottom wiring diagram (with indicator and diode)

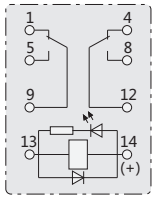

2Z

Installation hole position

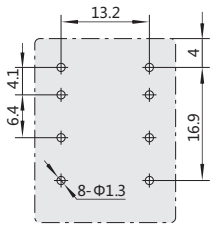

3Z

Bottom wiring diagram

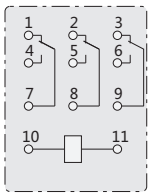

3Z

Bottom wiring diagram (with indicator)

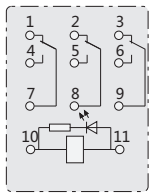

3Z

Bottom wiring diagram (with indicator and diode)

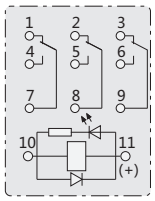

3Z

Installation hole position

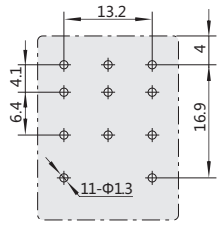

4Z

Bottom wiring diagram

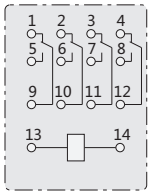

4Z

Bottom wiring diagram (with indicator)

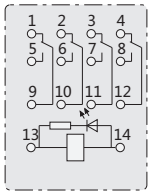

O

«Электро-Профи» - www.ep.ru

4Z

Bottom wiring diagram (with indicator and diode)

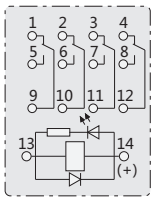

4Z

Installation hole position

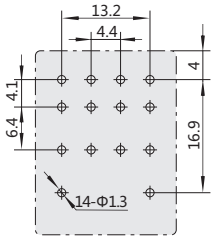

2Z

Outline drawing (directly plugged)

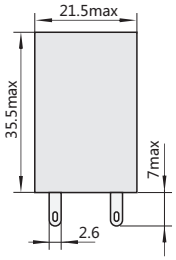

2Z

Outline drawing (welded)

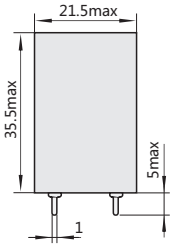

3Z

Outline drawing (directly plugged)

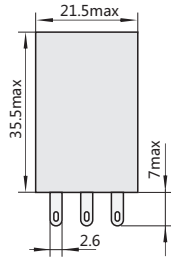

3Z

Outline drawing (welded)

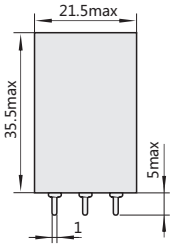

4Z

Outline drawing (directly plugged)

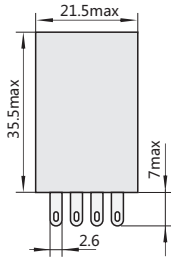

4Z

Outline drawing (welded)

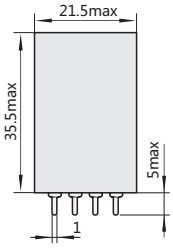

2ZH

Outline drawing (directly plugged)

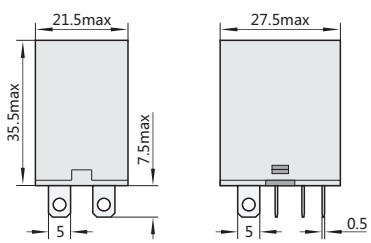

2ZH

Outline drawing (welded)

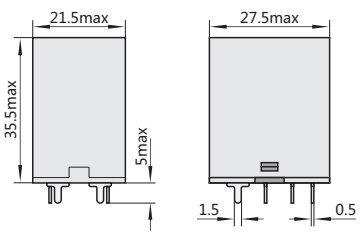

«Электро-Профи» - www.ep.ru

Socket outline and dimensions

RS-NXJ-2Z/C1



72×23×31 (mm)

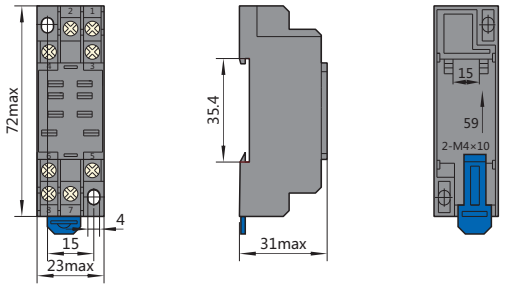

RS-NXJ-2Z/C2



72×23×31 (mm)

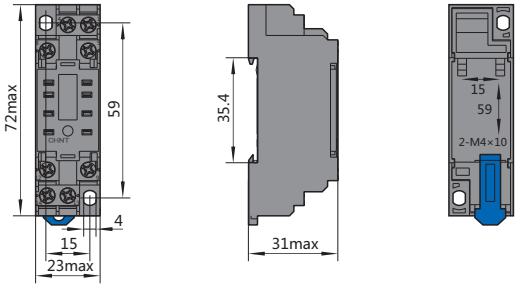

RS-NXJ-2Z/C3



63×30.5×26 (mm)

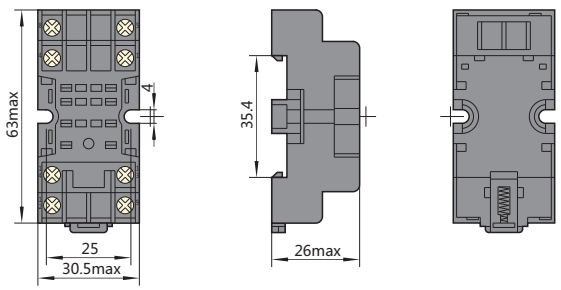

RS-NXJ-3Z/C1



72×30×31 (mm)

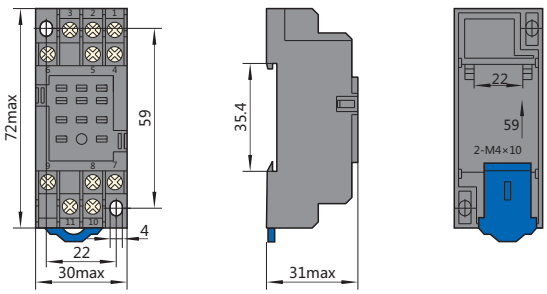

«Электро-Профи» - www.ep.ru

RS-NXJ-3Z/C2



72×30×31 (mm)

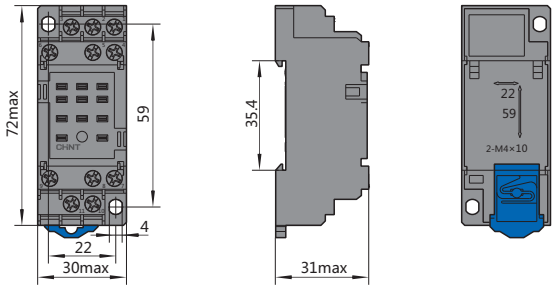

RS-NXJ-3Z/C3



63×30.5×26 (mm)

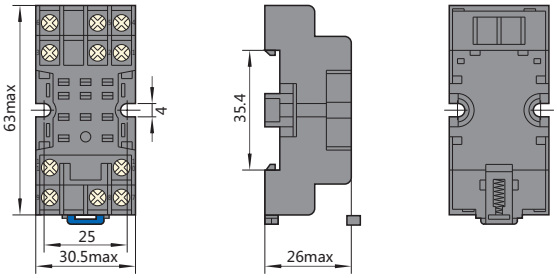

RS-NXJ-4Z/C1



72×30×31 (mm)

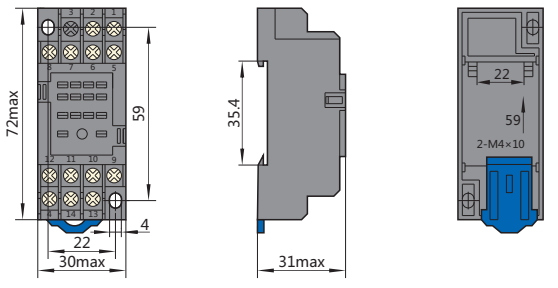

RS-NXJ-4Z/C2



72×30×31 (mm)

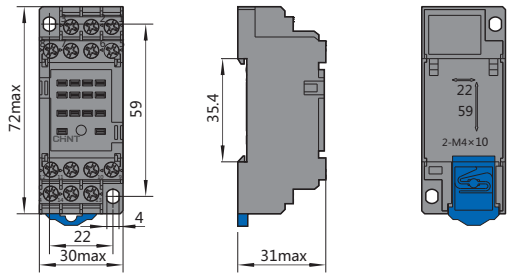

«Электро-Профи» - www.ep.ru

RS-NXJ-4Z/C3



63×30.5×26 (mm)

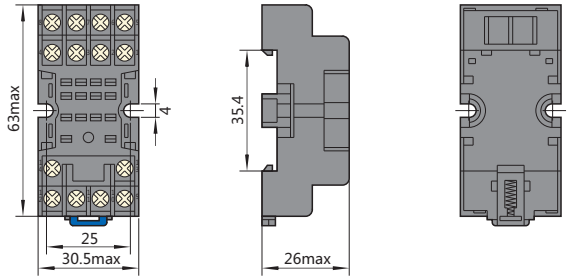

Hook outline

NG102



NG103



Socket + hook



«Электро-Профи» - www.ep.ru

Dual protection for key electrical power

Newest Automatic Transfer Switching
Equipment series product
Precise switching, worriless power utilization



«Электро-Профи» - www.ep.ru

CHINT ELECTRIC | Next series

The Next Reliable Choice

Automatic Transfer Switching Equipment



«Электро-Профи» - www.ep.ru

CHINT ELECTRIC | Next series

Series Automatic Transfer Switching Equipment

NXZ Series Automatic Transfer Switching Equipment

General	P-001
Model definition and description	P-002
Functions and characteristics	P-003
Mode of connection of the main part and controller	P-008
Overall and installation dimension	P-012

NXZ(H)B/NXZ(H)M Series Automatic Transfer Switching Equipment

General	P-014
Model definition and description	P-016
Functions and characteristics	P-017
Mode of connection of the main part and controller	P-023
Overall and installation dimension	P-029

«Электро-Профи» - www.ep.ru



NXZ
Series Automatic Transfer Switching Equipment

1. General

1.1 Scope of Application

1.1.1 NXZ series Automatic Transfer Switching Equipment is applicable to the three-phase four-wire duplicate supply power grid of AC 50Hz, rated voltage 400V/415V and below, and rated current up to 630A . It can automatically connect one or several load circuits from one power source to the other to ensure the normal power supply for the load circuit.

1.1.2 This product is applicable to industrial and commercial power use places, high-rise buildings, and residential houses.

1.2 Applicable standards

1.2.1 Product standard

IEC 60947-1.

IEC 60947-6-1.

1.2.2 Standards for use in extreme environment

IEC 60068-2-1. (Low Temperature)

IEC 60068-2-2. (High Temperature)

IEC 60068-2-30. (Cyclic Damp Heat)

IEC 60068-2-11. (Salt mist)

1.2.3 Certification ：CB、CE、KEMA

1.3 Normal working conditions

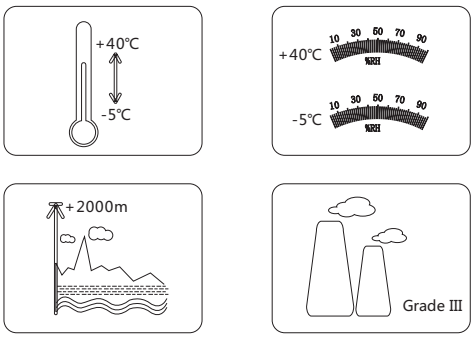

1.3.1 Ambient temperature

-5°C~+40°C; Users can custom-tailor relevant product to be used in the environment of -25°C~+70°C, and use the product according to the temperature compensation table.

1.3.2 Sea level elevation

Equal to 2000m or below; if it needs to work above 2000m altitude, it shall be used according to the table of capacity reduction of different altitudes.

1.3.3 Atmospheric conditions

The relative humidity shall not exceed 50% when the surrounding air temperature is +40°C; the relative humidity can be higher when the temperature is lower; the average monthly maximum relative humidity in the wettest month is 90%, and the average monthly minimum temperature shall be +20°C. Special measures may be necessary in cases of occasional condensation due to variations in temperature.

1.3.4 Pollution degree: class 3

1.3.5 Installation category

Installation category of the switching equipment of main circuit is category IV.

Installation category of auxiliary circuit is category III.

Installation category of conversion controller is category II.

1.3.6 Utilization category: AC-33B

Electromagnetic compatibility (EMC)

Electrostatic discharge (IEC 61000-4-2) Level 2

Radio-frequency electromagnetic field-radiated electromagnetic field immunity (IEC 61000-4-3) Level 3,

Fast transient bursts (IEC 61000-4-4) Level 3,

Surges (IEC 61000-4-5) Level 3,

Radio-frequency electromagnetic field-conducted immunity (IEC 61000-4-6) Level 3,

Radiation grade (CISPR11) grade B,

«Электро-Профи» - www.ep.ru

2. Model definition and description

NXZ - 125 / 4 A 100A

- Rated current code: 80A、100A、125A、160A、200A、250A、315A、320A、400A、500A、630A
- Controller code: A: standard type; B: intelligent type
- Pole code: 3: 3 pole; 4: 4 pole
- Frame current code: 125A; 250A; 630A
- Product code: NXZ: series automatic transfer switching equipment (PC grade)

Type selection example:
NXZ-125/4A 125A: To order an Automatic Transfer Switching Equipment of which the frame current is 125A, number of poles is 4P, rated current is 125A, with a standard controller
Note: when the controller is installed in split type, the split wire needs to be ordered separately.

Structural Features of the Automatic Transfer Switching Equipment

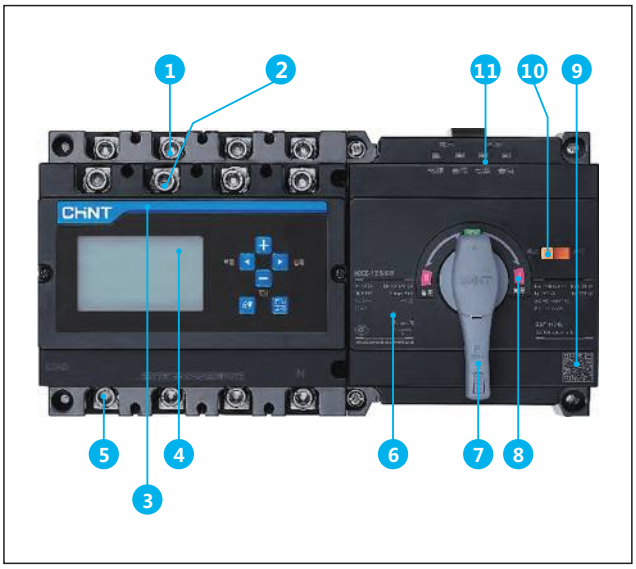

1. Terminal on the normal supply side
2. Terminal on the alternative supply side
3. Trade mark
4. Display and operation module of the controller
5. Terminal on the load side
6. Nameplate
7. Handle
8. Switching-off/switching-on indicator
9. QR Code
10. Manual/electric dial switch
11. Controller processing module

Comparison Table of Frame Current and Rated Current

Rated current (A)		80	100	125	160	200	250	315	320	400	500	630
Frame current (A)	125	■	■	■								
					■	■	■					
	630							■	■	■	■	■

«Электро-Профи» - www.ep.ru

3. Functions and characteristics

Technical parameters of NXZ (Class PC)

Model	NXZ-125	NXZ-250	NXZ-630
Electrical characteristics			
Frame current (A)	125	250	630
Rated current (A)	80,100,125	160,200,250	315,320,400,500,630
Rated operational voltage Ue (V)	400/415 50Hz		
Rated insulation voltage Ui (V)	AC800		
Rated impulse withstand voltage Uimp (kV)	8		
Utilization category	AC-33B		
Number of poles	3P/4P		
Rated conditional short-circuit current Iq (kA)	100		
Rated short-circuit making capacity Icm (kA)	20	30	50
Rated short time withstand current Icw/0.2s (kA)	10	10	25
Contact transfer time (S)	0.6× (1±50%)	1× (1±10%)	1.5× (1±10%)
Operating transfer time (S)	1.2× (1±10%)	2.1× (1±10%)	3.3× (1±10%)
Mechanical endurance (times)	8500	7000	3000
Electrical endurance (times)	1500	1000	1000
Overall dimension			
Width x height x depth (mm)	245×130×126	295×175×175	430×272×230
Controller characteristics			
Controller model	A type (standard), B type (intelligent)		
Installation mode	Integrated, split		
Rated control power supply voltage Us (V)	230/240 50/60Hz		
Control voltage range	85%~110%Ue		

«Электро-Профи» - www.ep.ru

Parameters of controller

Function \ Model	A type (standard)	B type (intelligent)
Manual/automatic transfer	■	■
Main contact positions		
Normal position	■	■
Alternative position	■	■
Off-position	■	■
Automatic control		
Normal supply of monitoring	■ Phase failure/loss of voltage, undervoltage, overvoltage fault	■ Phase failure/loss of voltage, undervoltage, overvoltage fault
Alternative supply of monitoring	■ Phase failure/loss of voltage, undervoltage, overvoltage fault	■ Phase failure/loss of voltage, undervoltage, overvoltage fault
Automatically transfer and restore operation	■	■
Automatically transfer and nonautomatically restore operation	■	■
Grid-grid	■	■
Grid-generator	■	■
Phase failure/loss of voltage transfer	■	■
Under voltage transfer	■	■
Over voltage transfer	■	■
Delay adjustable	■	■
Transfer delay	0s~300s adjustable	0s~300s adjustable
Return delay	0s~300s adjustable	0s~300s adjustable
Generator control	■	■
Fire control linkage	■	■
Indication		
Switching-on/switching-off/Off-position indication	■	■
Normal/alternative supply indication	■	■
Parameter setting indication	■	■
Others		
Communication function	-	■
Display module	■ LED	■ LCD

«Электро-Профи» - www.ep.ru

4. Functions and characteristics

Operation interface of the display module of controller

Figure 1

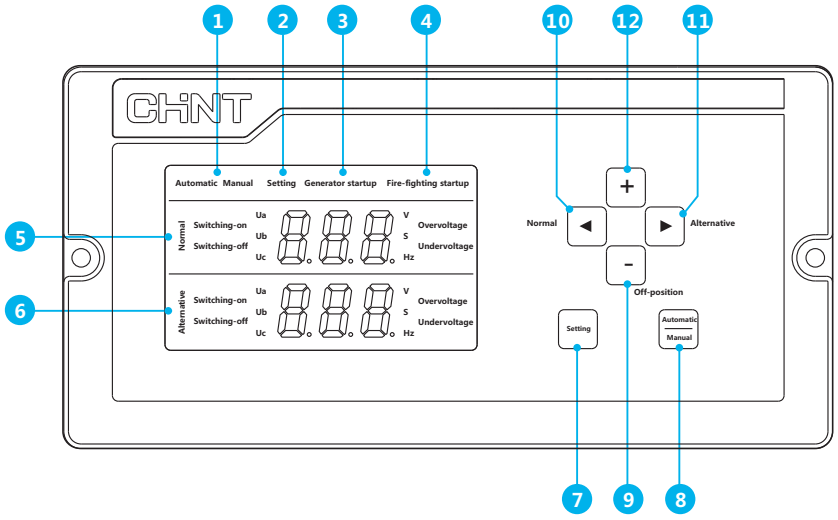

1. Indication of automatic/manual operation mode
2. Setting status indication
3. Indication of the startup signal of generator
4. Indication of start of the fire control linkage function
5. Display area of the status parameters of normal supply: Display the voltage parameters and Transfer delay time of normal supply in working state; display the setting item parameters in setting state;
6. Display area of the status parameters of alternative supply: Display the voltage parameters and return delay time of alternative supply in working state; display the setting item parameters in setting state;
7. Setting button (press this button to enter the parameter setting menu of the controller);
8. Automatic/manual transfer mode selector button: used for selection of automatic/manual transfer mode in normal working state; used for save and exit in setting state;
9. Off-position button: under the manual control mode, any one of the two power supply is normal, press this button to make automatic transfer switching equipment on off-position; Under setting mode, this button is used to decrease value in parameter setting;
10. Normal supply transfer button: under the manual control mode, the switch is on alternative position, press this button to switch on normal supply; under setting mode, this button is used for pageup in parameter setting;
11. Alternative supply transfer button: under the manual control mode, the switch is on normal position, press this button to switch on alternative supply; under setting mode, this button is used for pagedown in parameter setting;
12. + button:Under setting mode, this button is used for increase value in parameter setting.

«Электро-Профи» - www.ep.ru

Parameter setting of the display module of controller

Figure 2

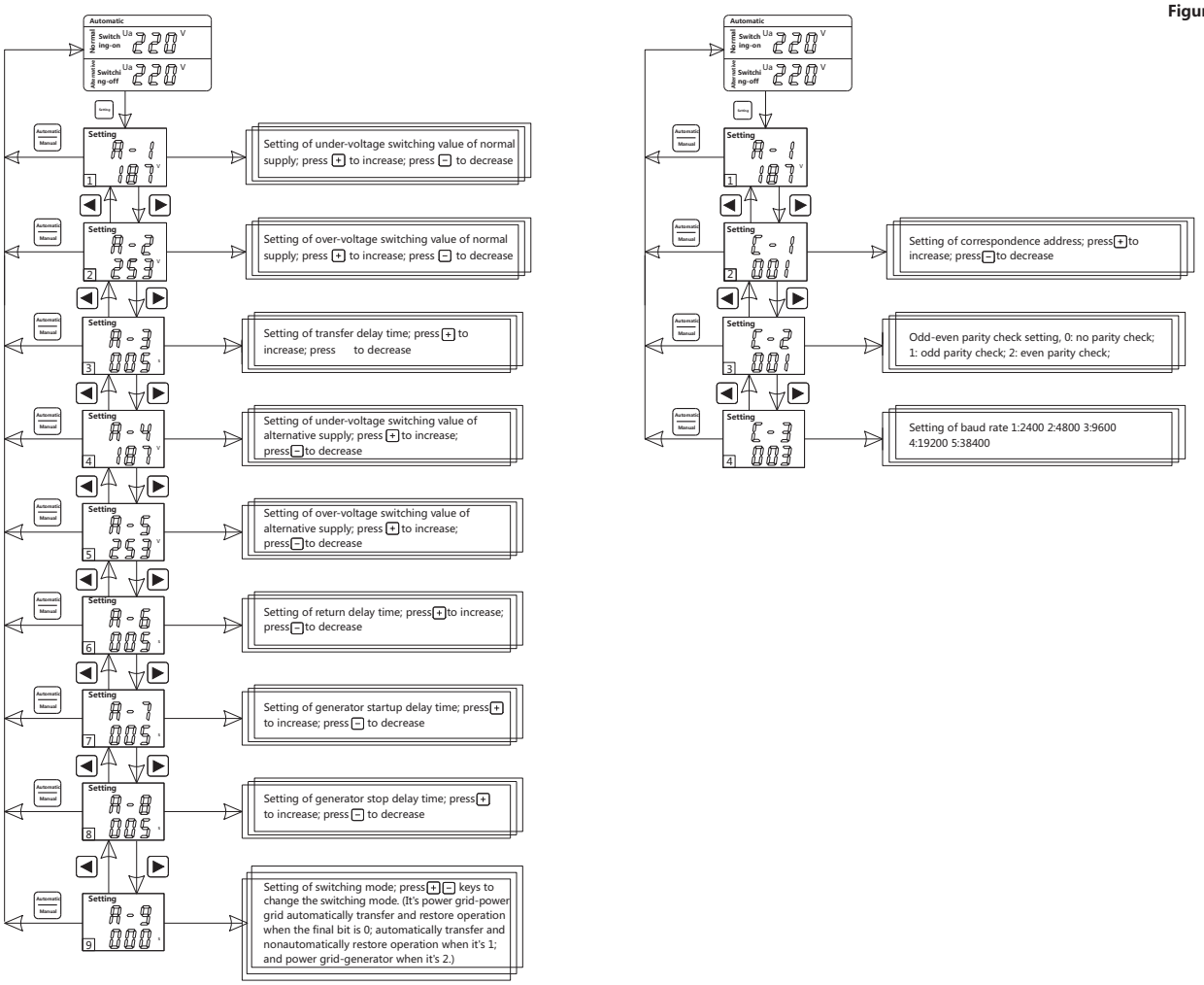

Note: The functional parameters of the display module and communication module are set as follows:

Setting of under-voltage switching value: Default to 187V, user-settable 160V~200V;

Setting of over-voltage switching value: Default to 263V, user-settable 240V~290V;

Transfer delay setting:Default to 5s, user-settable 0s~300s;

Return delay setting: Default to 5s, user-settable 0s~300s;

Generator startup delay setting:Default to 5s, user-settable 0s~300s;

Generator stop delay setting: Default to 5s, user-settable 0s~300s;

Switching and power source mode:Default setting: automatically transfer and restore operation (grid - grid), and user can set automatically transfer and nonautomatically restore operation (grid - grid), automatically transfer and restore operation (grid - power generation)..

Default parameter setting for communication function: address: 1; Baud rate: 9600bps; parity check bit: odd parity; data bit: 8; stop bit: 1

■ Buttons:

Press setup key to enter the setting interface when the controller is working. Press " " " " to page up or down the setting menu. Press manual/automatic key to exit from the setting menu. Press " " " " to revise the parameters.

Parameter setting of communication function (note: please ask for the communication agreement from our after-service staff)

◀ ▶

\+ −

«Электро-Профи» - www.ep.ru

5. Functions and characteristics

Controller action flow

Figure 3

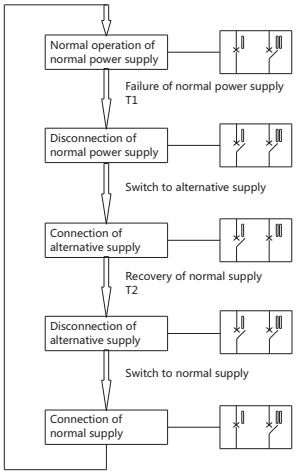

Automatically transfer and restore operation (power grid-power grid) work flow diagram of controller

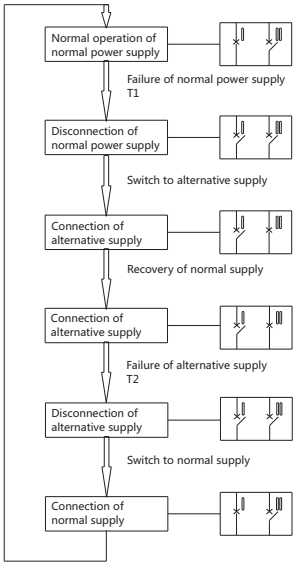

Automatically transfer and nonautomatically restore operation (power grid-power grid) work flow diagram of controller

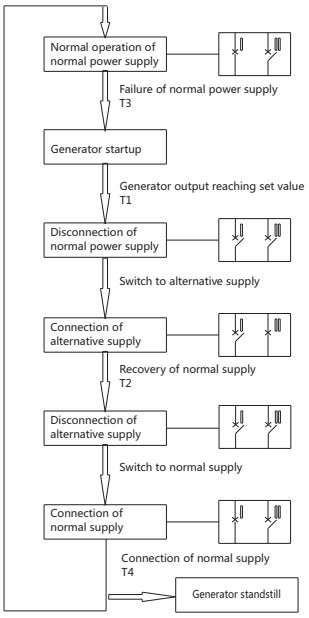

Automatically transfer and restore operation (power grid-generator) work flow diagram of controller

I: Normal supply II: Alternative supply
T1: Transfer delay time, normal supply fault, time before disconnection of I;
T2: Return delay time, normal supply recovered, time before disconnection of II;
T3: Generator startup delay time: 0s~300s, adjustable
T4: Generator standstill delay time: 0s~300s, adjustable

Padlocking function

Padlock apertureΦ5~Φ8 (mm)

Figure 4

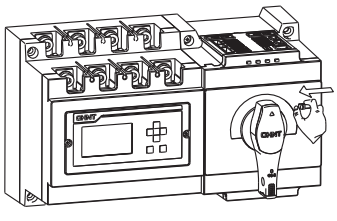

① The product is on off-position. Put the yellow toggle switch on the manual position.

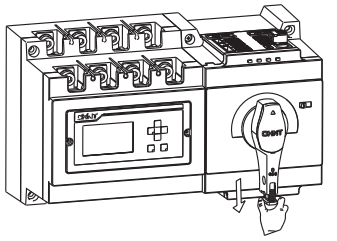

② Pull out the limiting member and lock it.

Communication function

Modbus protocol; RS485 interface.

«Электро-Профи» - www.ep.ru

6. Mode of connection of the main part and controller

Product incoming mode: upper incoming

Figure 5

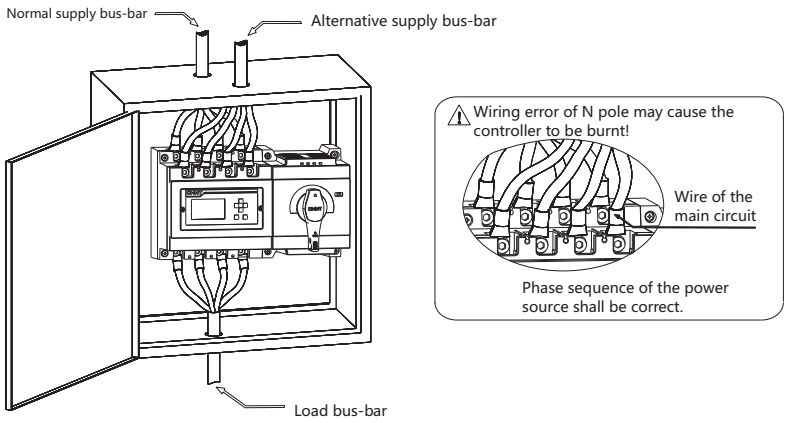

Installation mode: vertical or horizontal

Product wiring

Figure 6

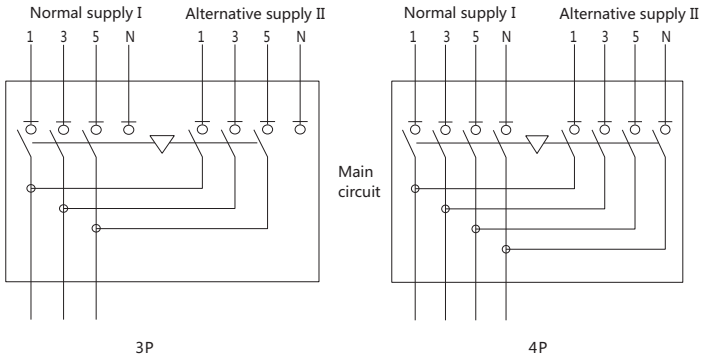

P

«Электро-Профи» - www.ep.ru

7. Mode of connection of the main part and controller

Wire connection

Figure 7

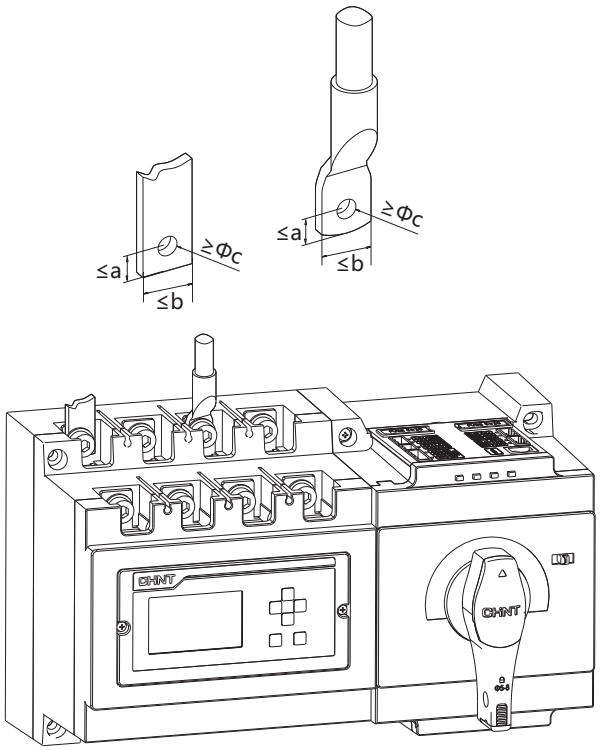

Unit: mm

	a	b	c
NXZ-125	8	21.5	6
NXZ-250	10	27.5	8
NXZ-630	15	43	12

Split type installation of the display module (cabinet)

Figure 8

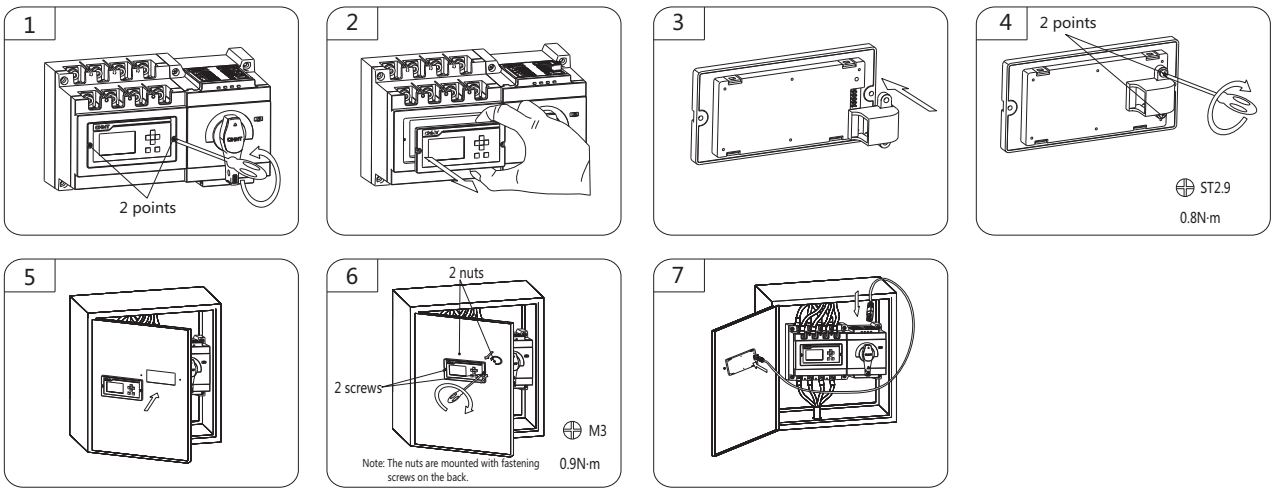

«Электро-Профи» - www.ep.ru

Wiring of signal and control terminal

A type controller

Figure 9

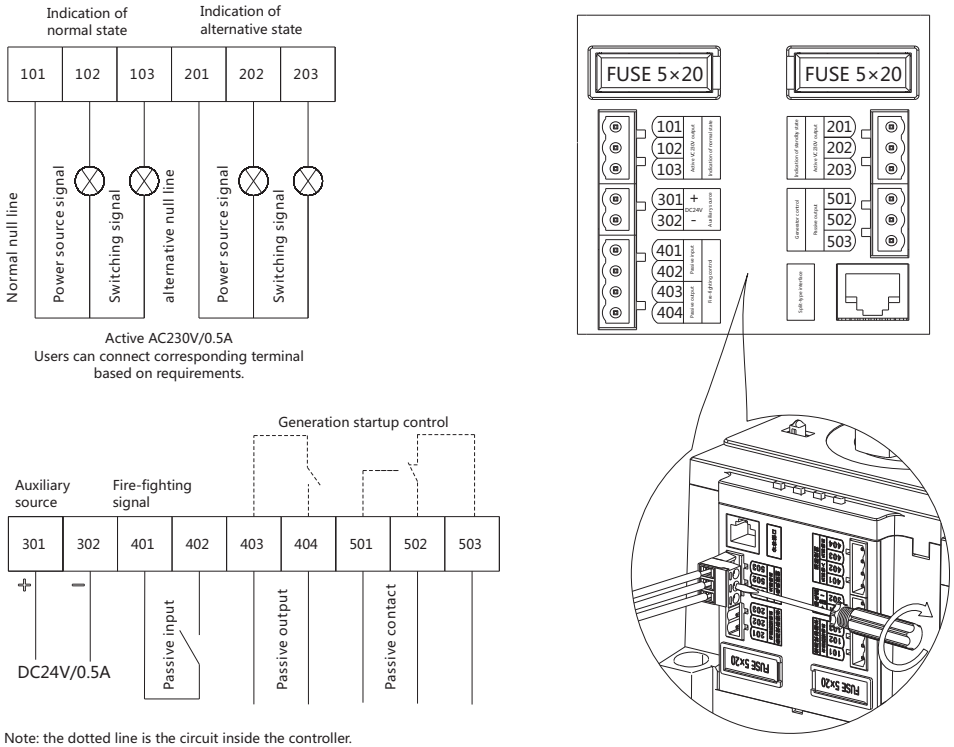

Note: the dotted line is the circuit inside the controller.

B type controller

Figure 10

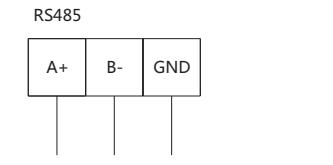

Note: The signal and controller terminal wiring of B type controller is same with A type controller, and B type controller has communication terminal wiring.

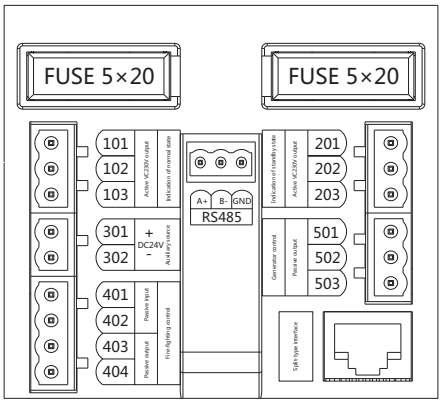

«Электро-Профи» - www.ep.ru

8. Mode of connection of the main part and controller

Typical application

Figure 11

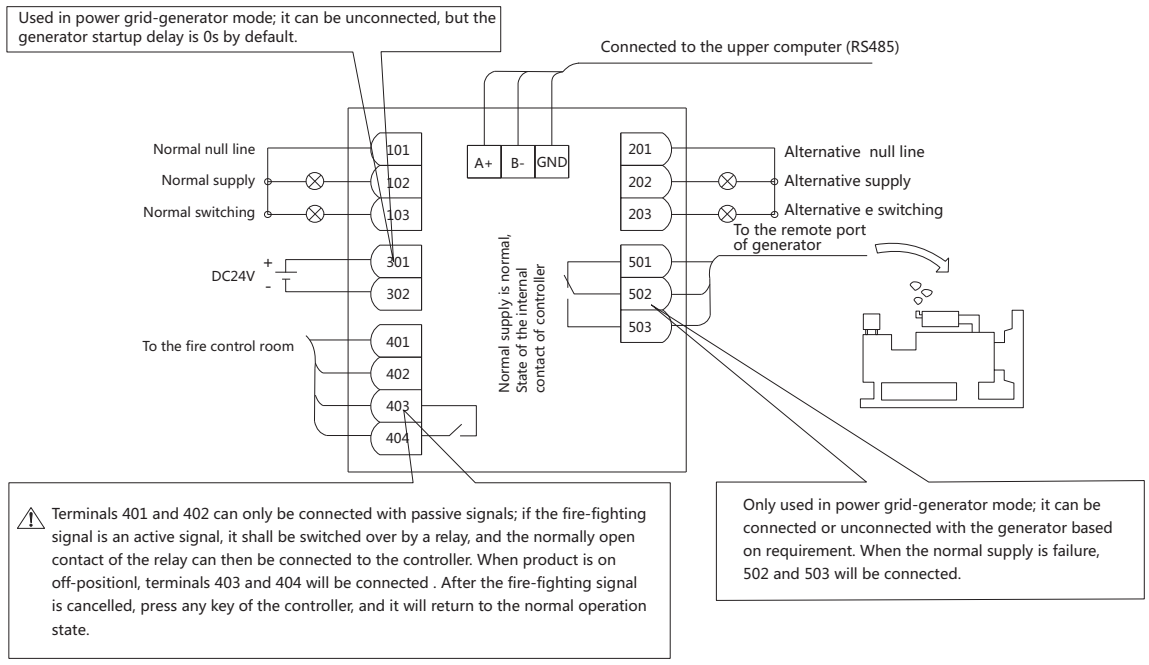

«Электро-Профи» - www.ep.ru

9. Overall and installation dimension

Product overall and installation dimension

Figure 12

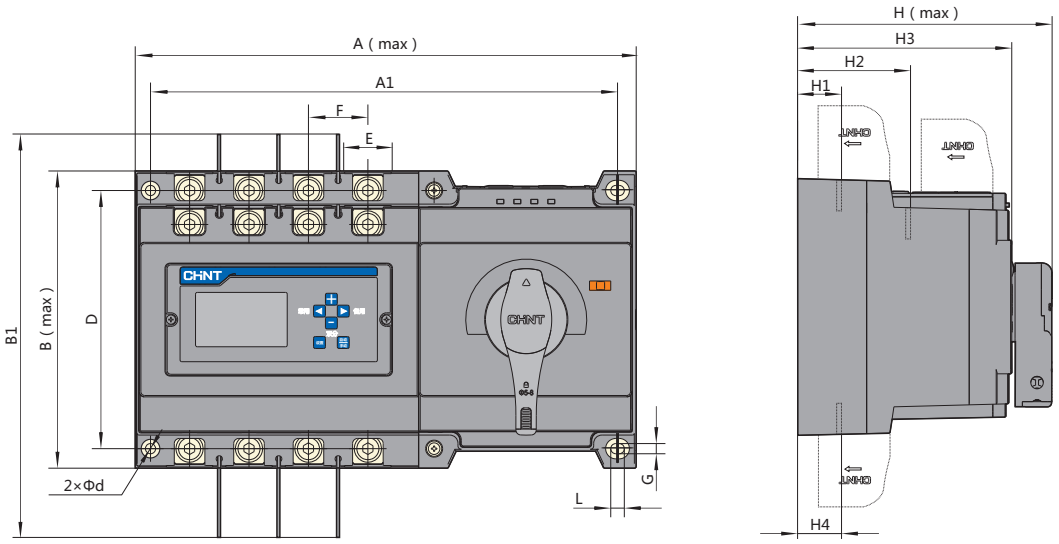

Unit: mm

Product code	A	A1	B	B1	D	E	F	G	L	H	H1	H2	H3	H4	d
NXZ-125	245	229.5	130	220	113	21.5	30	4.5	5.5	126	21	71	107.5	21	4.5
NXZ-250	295	275	175	304	152	27.5	35	6	8	175	29	99	146	29	6
NXZ-630	430	400	272	461	240	43	58	9	13	230	41	131	192	41	9

Hole size of the product installation plate

Figure 13

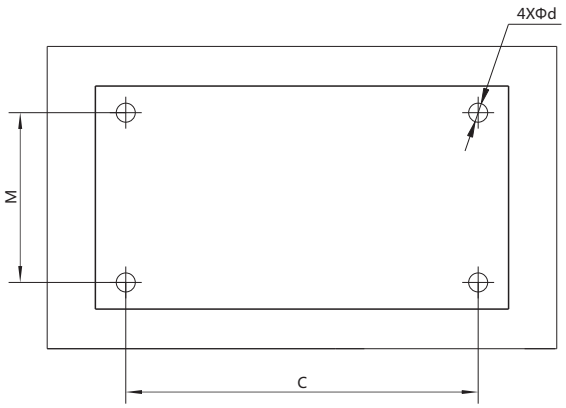

Unit: mm

Product code	C	M	d
NXZ-125	229.5	113	4.5
NXZ-250	275	152	6
NXZ-630	400	240	9

«Электро-Профи» - www.ep.ru

10. Overall and installation dimension

Overall dimension of split type module (unit: mm)

Figure 14

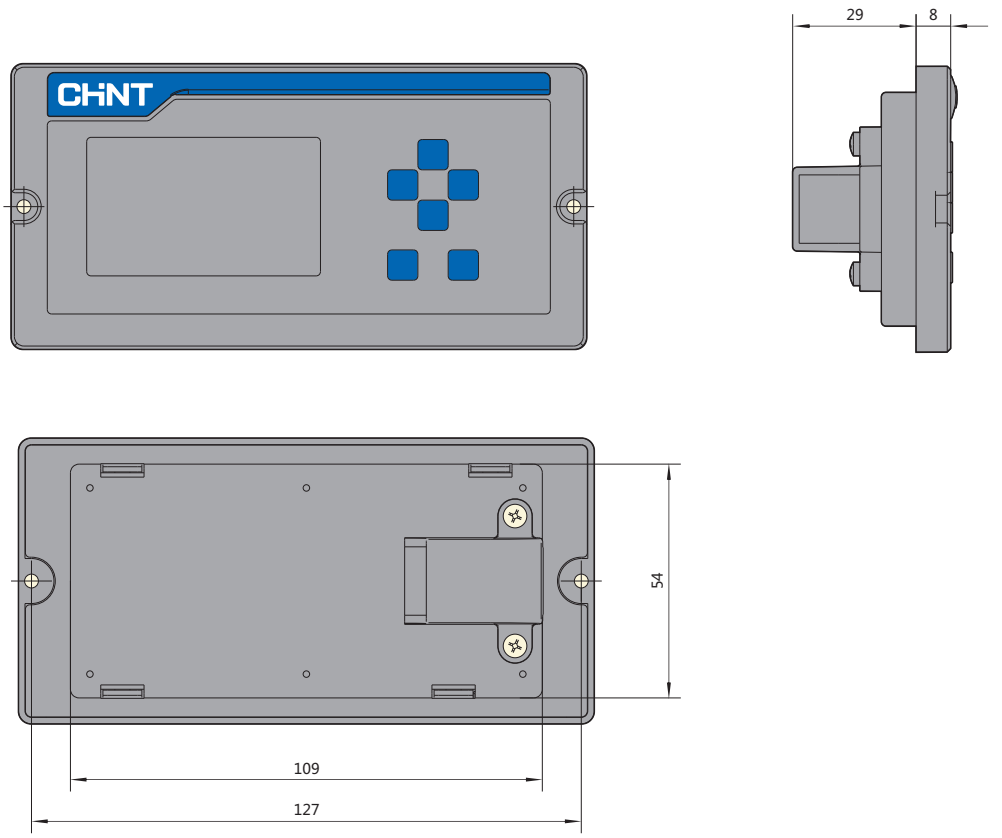

Size of the installation cabinet of split type module (unit: mm)

Figure 15

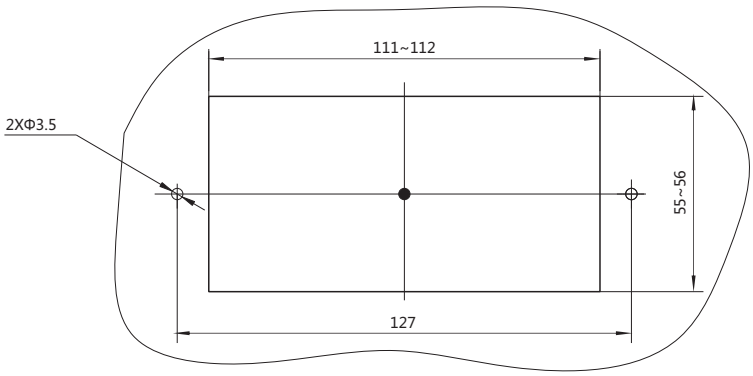

«Электро-Профи» - www.ep.ru



NXZ(H)B、NXZ(H)M Series ATS

1. General

1.1 Scope of Application

1.1.1 NXZ(H)B/NXZ(H)M Series Automatic Transfer Switching Equipment is applicable to three-phase four-wire duplicate supply grid of AC 50/60Hz, rated voltage 400V/415V and below, rated current 800A, and can switch one or several load circuits from one power source to the other to ensure the normal power supply of the load circuit.

1.1.2 This product is applicable to industrial and commercial power use places, high-rise buildings, and residential houses.

1.2 Applicable standards

1.2.1 Product standard
IEC 60947-1.
IEC 60947-6-1.

1.2.2 Standards for use in extreme environment
IEC 60068-2-1. (Low Temperature)
IEC 60068-2-2. (High Temperature)
IEC 60068-2-30. (Cyclic Damp Heat)
IEC 60068-2-11. (Salt mist)

1.3 Normal working conditions

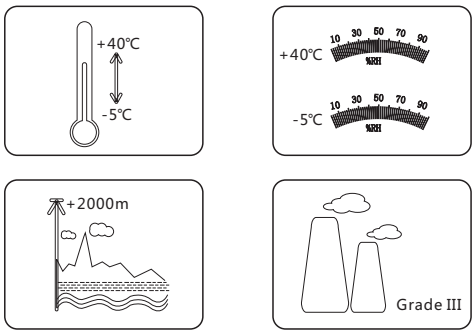

1.3.1 Ambient temperature
-5°C~+40°C; Users can custom-tailor relevant product to be used in the environment of -25°C~+70°C, and use the product according to the temperature compensation table.
1.3.2 Sea level elevation
Equal to 2000m or below; if it needs to work above 2000m altitude, it shall be used according to the table of capacity reduction of different altitudes.

1.3.3 Atmospheric conditions
The relative humidity shall not exceed 50% when the surrounding air temperature is +40°C; the relative humidity can be higher when the temperature is lower; the average monthly maximum relative humidity in the wettest month is 90%, and the average monthly minimum temperature shall be +20°C. Special measures may be necessary in cases of occasional condensation due to variations in temperature.

1.3.4 Pollution degree: class 3

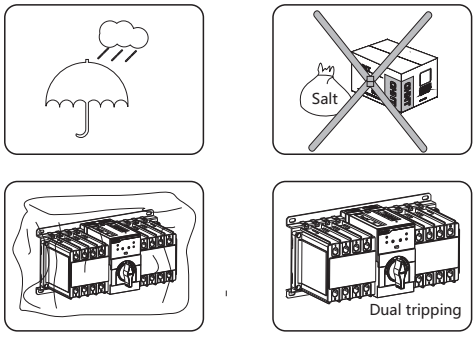

1.3.5 Installation category
Installation category of the switching equipment of main circuit is category IV.
Installation category of auxiliary circuit is category III.
Installation category of conversion controller is category II.

1.3.6 Utilization category:
NXZB: AC-33iB
NXZ (H) B: AC-33B
NXZ (H) M: AC-33B

1.3.7 Electromagnetic compatibility (EMC)
Electrostatic discharge (IEC 61000-4-2) Level 2
Radio-frequency electromagnetic field-radiated electromagnetic field immunity (IEC 61000-4-3) Level 3,
Fast transient bursts (IEC 61000-4-4) Level 3,
Surges (IEC 61000-4-5) Level 3, Radio-frequency electromagnetic field-conducted immunity (IEC 61000-4-6) Level 3, Radiation grade (CISPR11) grade B,

«Электро-Профи» - www.ep.ru

2. Model definition and description

NXZB-63 (Class CB)

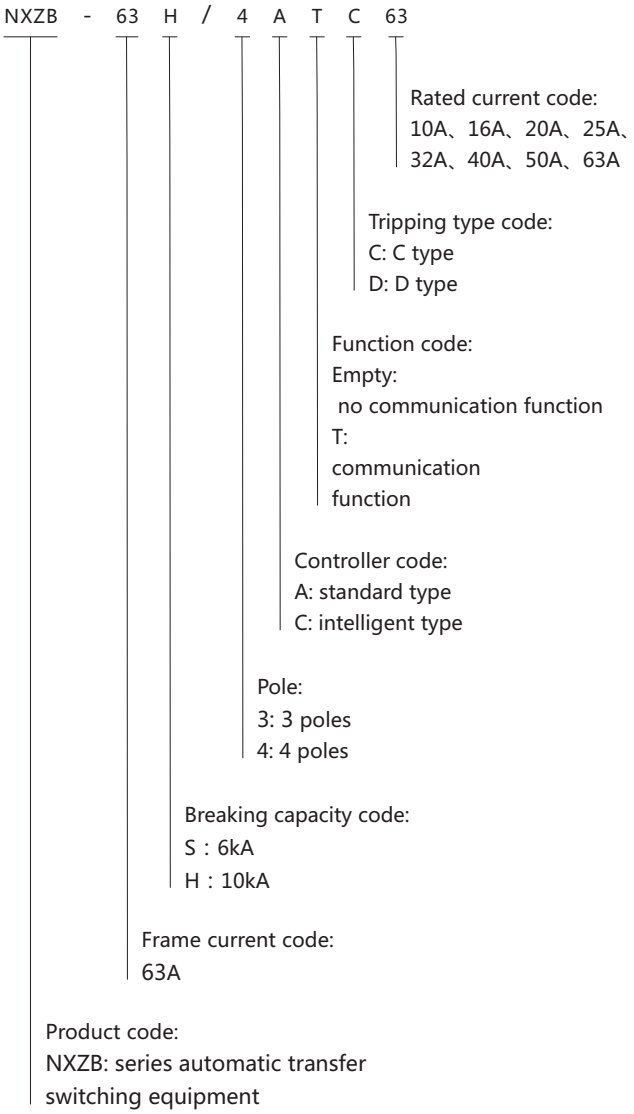

NXZM (Class CB)

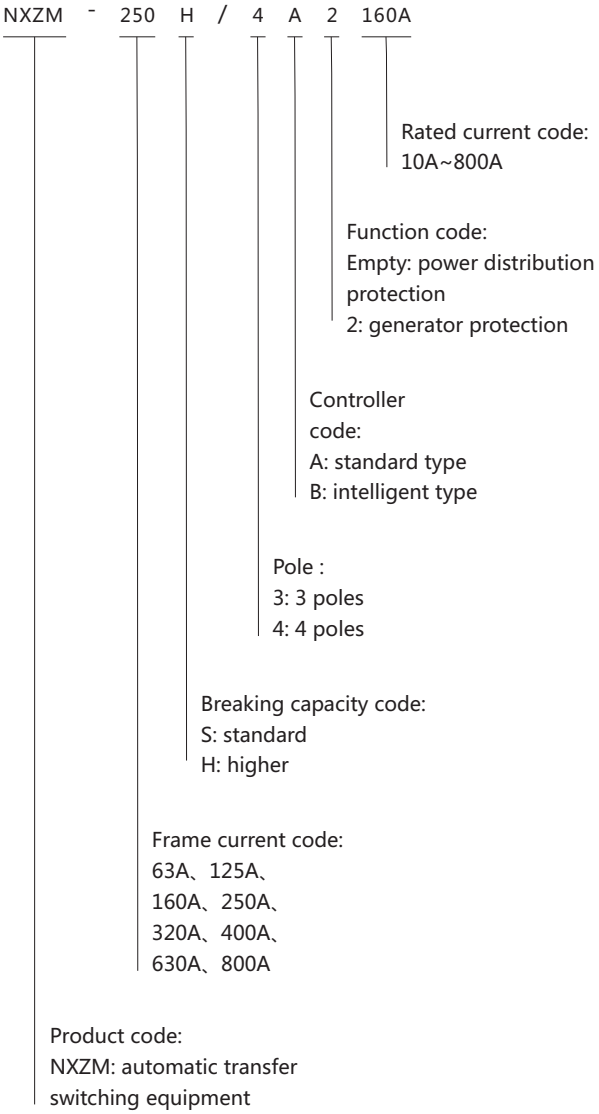

Type selection example:
NXZB-63H/4C C63:To order a class CB automatic transfer switching equipment, the frame current is 63A, number of poles is 4P, the breaking capability is 10kA, rated current is 63A, the tripping type is C type, with an intelligent controller (C type).

Type selection example:
NXZM-250H/4A 160A:To order a class CB automatic transfer switching equipment, the frame current is 250A, number of poles is 4P, H breaking capability, rated current is 160A, with a standard controller (A type) and generator protection.

Comparison Table of Frame Current and Rated Current

Rated current (A)		10	16	25	32	40	50	63	80	100	125	160	180	200	225	250	315	320	350	400	500	630	700	800
Frame current (A)	63	■	■	■	■	■	■	■																
	125							■	■	■	■													
	160										■	■												
	250											■	■	■	■	■								
	320															■		■						
	400															■	■		■	■				
	630																			■	■	■		
	800																					■	■	■

«Электро-Профи» - www.ep.ru

NXZHB-63 (Class PC)

NXZHB - 63 / 4 A T 63A

- Rated current code: 16A、32A、63A
- Function code: Empty: no communication function; T: communication function
- Controller code: A: standard type; C: intelligent type
- Pole : 3: 3 poles; 4: 4 poles
- Frame current code: 63A
- Product code: NXZHB: automatic transfer switching equipment

Type selection example:
NXZHB-63/4A 63A:To order a PC grade automatic transfer switching equipment, the frame current is 63A, number of poles is 4P, rated current is 63A, with a standard controller (A type).

NXZHM (Class PC)

NXZHM - 250 / 4 A 160A

- Rated current code: 10A~800A
- Controller code: A: standard type; B: intelligent type
- Pole: 3: 3 poles; 4: 4 poles
- Frame current code: 63A、125A、160A、250A、320A、400A、630A、800A
- Product code: NXZHM: automatic transfer switching equipment

Type selection example:
NXZHM-250/4A 250A:To order a PC grade automatic transfer switching equipment, the frame current is 250A, number of poles is 4P, rated current is 250A, with a standard controller (A type)

Comparison Table of Frame Current and Rated Current

Rated current (A)		10	16	25	32	40	50	63	80	100	125	160	180	200	225	250	315	320	350	400	500	630	700	800
Frame current (A)	63	■	■	■	■	■	■	■																
	125							■	■	■	■													
	160										■	■												
	250											■	■	■	■	■								
	320															■		■						
	400															■	■		■	■				
	630																			■	■	■		
	800																					■	■	■

«Электро-Профи» - www.ep.ru

3. Functions and characteristics

Technical parameters of NXZB-63 (class CB)

Model	NXZB-63S	NXZB-63H
Electrical characteristics		
Execution body	NXB-63	NXB-63H
Frame current (A)	63	63
Rated current (A)	10 , 16 , 20 , 25 , 32 , 40 , 50 , 63	10 , 16 , 20 , 25 , 32 , 40 , 50 , 63
Rated operational voltage Ue (V)	400	400
Rated insulation voltage Ui (V)	500	500
Rated impulse voltage Uimp (kV)	4	4
Utilization category	AC-33iB	AC-33iB
Number of poles	3P、4P	3P、4P
Rated short-circuit making capacity Icm (kA)	9	17
Rated short-circuit breaking capacity Icn (kA)	6	10
Tripping curve type	C、D	C、D
Mechanical endurance (times)	10000	10000
Electrical endurance (times)	3000	3000
Controller characteristics		
Controller model	A type (standard), C type (intelligent)	
Operating transfer time (s)	1.4× (1±10%)	
Controller installation mode	Built in	
Rated control power source voltage Us(V)	230 50Hz	
Control voltage range	85%Ue~110%Ue	

Technical parameters of NXZM (class CB)

Model	NXZM-63	NXZM-125	NXZM-160	NXZM-250	NXZM-320	NXZM-400	NXZM-630	NXZM-800
Electrical characteristics								
Execution body	NXM-63	NXM-125	NXM-160	NXM-250	NXM-320	NXM-400	NXM-630	NXM-800
Frame current (A)	63	125	160	250	320	400	630	800
Rated current (A)	10 , 16 , 25 , 32 , 40 , 50 , 63	63 , 80 , 100 , 125	125 , 160	160 , 180 , 200 , 225 , 250	160 , 180 , 200 , 225 , 250 , 320	250 , 315 , 350 , 400	400 , 500 , 630	630 , 700 , 800
Rated operational voltage Ue (V)	400/415 50Hz							
Rated insulation voltage Ui (V)	AC800	AC800	AC800	AC1000	AC1000	AC1000	AC1000	AC1000
Rated impulse voltage Uimp (kV)	8					12		
Use type	AC-33B							
Number of poles	3P、4P							
Rated short-circuit making capacity Icm (kA)	S : 52.5 H : 105	S : 52.5 H : 105	S : 73.5 H : 105	S : 73.5 H : 105	S : 73.5 H : 105	S : 105 H : 143	S : 105 H : 143	S : 105 H : 165
Rated short-circuit breaking capacity Icn (kA)	S : 25 H : 50	S : 25 H : 50	S : 35 H : 50	S : 35 H : 50	S : 35 H : 50	S : 50 H : 65	S : 50 H : 65	S : 50 H : 75
Mechanical endurance (times)	10000	10000	8000	6000	6000	4000	4000	4000
Electrical endurance (times)	2000	2000	2000	2000	2000	1500	1500	1000
Controller characteristics								
Controller model	A type (standard), B type (intelligent)							
Operating transfer (s)	2.8 × (1±10%)	2.8 × (1±10%)	3.3 × (1±10%)	3.3 × (1±10%)	3.3 × (1±10%)	3.5 × (1±10%)	3.5 × (1±10%)	4 × (1±10%)
Installation mode	Integrated, split							
Rated control power source voltage Ue(V)	230/240 50Hz							
Control voltage range	85%~110%Ue							

«Электро-Профи» - www.ep.ru

Technical parameters of NXZHB-63 (class PC)

Model	NXZHB-63
Electrical characteristics	
Frame current (A)	63
Rated current (A)	16 , 32 , 63A
Rated operational voltage Ue (V)	400
Rated insulation voltage Ui (V)	500
Rated impulse voltage Uimp (kV)	4
Utilization category	AC-33B
Number of poles	3P、4P
Rated conditional short-circuit current Iq (kA)	100
Mechanical endurance (times)	10000
Electrical endurance (times)	1500
Controller characteristics	
Controller model	A type (standard), C type (intelligent)
Operating transfer (s)	1.4× (1±10%)
Controller installation mode	Built in
Rated control power source voltage Ue(V)	230 50Hz
Control voltage range	85%Ue~110%Ue

Technical parameters of NXZHM (class PC)

Model	NXZHM-63	NXZHM-125	NXZHM-160	NXZHM-250	NXZHM-320	NXZHM-400	NXZHM-630	NXZHM-800
Electrical characteristics								
Execution body	NXHM-63	NXHM-125	NXHM-160	NXHM-250	NXHM-320	NXHM-400	NXHM-630	NXHM-800
Frame current (A)	63	125	160	250	320	400	630	800
Rated current (A)	10 , 16 , 25 , 32 , 40 , 50 , 63	63 , 80 , 100 , 125	125 , 160	160 , 180 , 200 , 225 , 250	160 , 180 , 200 , 225 , 250 , 320	250 , 315 , 350 , 400	400 , 500 , 630	630 , 700 , 800
Rated operational voltage Ue (V)	400/415 50Hz							
Rated insulation voltage Ui (V)	AC800	AC800	AC800	AC1000	AC1000	AC1000	AC1000	AC1000
Rated impulse voltage Uimp (kV)	8					12		
Utilization category	AC-33E							
Number of poles	3P、4P	3P、4P	3P、4P	3P、4P	3P、4P	3P、4P	3P、4P	3P、4P
Rated conditional short-circuit current Iq (kA)	100	100	100	100	100	100	100	100
Mechanical endurance (times)	10000	10000	8000	6000	6000	4000	4000	4000
Electrical endurance (times)	2000	2000	2000	2000	2000	1500	1500	1000
Controller characteristics								
Controller model	A type (standard), B type (intelligent)							
Operating transfer (s)	2.8 × (1±10%)	2.8 × (1±10%)	3.3 × (1±10%)	3.3 × (1±10%)	3.3 × (1±10%)	3.5 × (1±10%)	3.5 × (1±10%)	4 × (1±10%)
Installation mode	Integrated, split							
Rated control power source voltage Us(V)	230/240 50Hz							
Control voltage range	85%~110%Ue							

«Электро-Профи» - www.ep.ru

4. Functions and characteristics

Functional parameters of NXZ (H) B controller

Function \ Model	A type (standard)	C型 (智能型)
Manual/automatic transfer	■	■
Main contact positions		
Normal position	■	■
Alternative position	■	■
Off-position	■	■
Automatic control		
Normal supply of monitoring	■ Phasefailure/lossofvoltage,undervoltage,overvoltagefault	■ Phasefailure/lossofvoltage,undervoltage,overvoltagefault
Alternative supply of monitoring	■ Phasefailure/lossofvoltage,undervoltage,overvoltagefault	■ Phasefailure/lossofvoltage,undervoltage,overvoltagefault
Automatically transfer and restore operation	■	■
Grid-grid	■	■
Phase failure/loss of voltage transfer	■	■
Undervoltage transfer	■	■
Delay adjustable	■	■
Transfer delay	0s~30s adjustable	0s~30s adjustable
Return delay	0s~30s adjustable	0s~30s adjustable
Generator control	-	Optional
Fire control linkage	■	■
Fire control feedback	■	■
Indication		
Switching-on/switching-off/dualtrippingindication	■	■
Normal/alternative supply indication	■	■
Parameter setting indication		
Others		
Communication function	Optional	Optional

Table of main functional parameters of NXZ (H) M controller

Function \ Model	A type (standard)	B type (intelligent)
Manual/automatic transfer	■	■
Main contact positions		
Normal position	■	■
Alternative position	■	■
Off-position	■	■
Automatic control		
Normal supply of monitoring	■ Phasefailure/lossofvoltage,undervoltage,overvoltagefault	■ Phasefailure/lossofvoltage,undervoltage,overvoltagefault
Alternative supply of monitoring	■ Phasefailure/lossofvoltage,undervoltage,overvoltagefault	■ Phasefailure/lossofvoltage,undervoltage,overvoltagefault
Automatically transfer and restore operation	■	■
Automatically transfer and nonautomatically restore operation	■	■
Grid-grid	■	■
Grid-generator	-	-
Phase failure/loss of voltage transfer	■	■
Undervoltage transfer	■	■
Overvoltage transfer	■	■
Delay adjustable	■	■
Transfer delay	0s~180s adjustable	0s~180s adjustable
Return delay	0s~180s adjustable	0s~180s adjustable
Generator control	-	■
Fire control linkage	■	■
Fire control feedback	■	■
Indication		
Switching-on/switching-off/off-position	■	■
Normal/alternative supply indication	■	■
Parameter setting indication	■	■
Fault tripping indication	■	■
Others		
Communication function	Optional	Optional
Display module	■ LED	■ LED

«Электро-Профи» - www.ep.ru

Functional description of NXZ (H) B

Figure 1

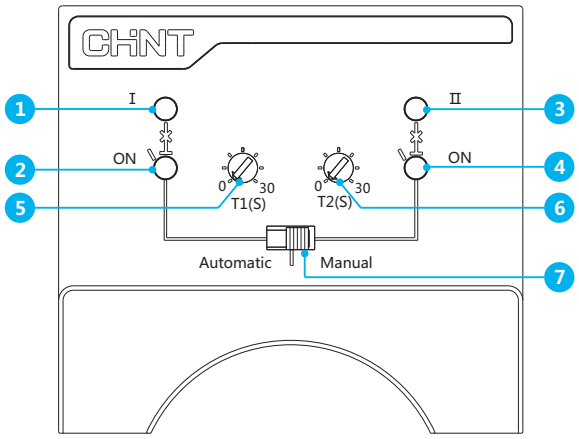

1 Normal supply (red)
2 Normal switching-on (green)
3 Alternative supply (red)
4 Alternative switching-on (green)
5 Transfer delay time setting (normal to alternative)
6 Return time delay setting (alternative to normal)
7 Automatic/manual switching

Indicator light information				
Product status	①	②	③	④
Normal supply normal	Normal on			
Normal circuit breaker switched on		Normal on		
Alternative supply normal			Normal on	
Alternative breaker switched on				Normal on
Transfer delay				Flash
Return delay		Flash		
Normal circuit breaker tripped	Flash	Flash		
Alternative breaker tripped			Flash	Flash
Product transfer fault	Flash		Flash	
Fire control linkage		Flash		Flash

P

Lock system

During line repair or fault-based maintenance, put the product on off-position, and then pull out the locking system of the handle, then lock it. The lock hole diameter is Φ5.5.

Figure 2

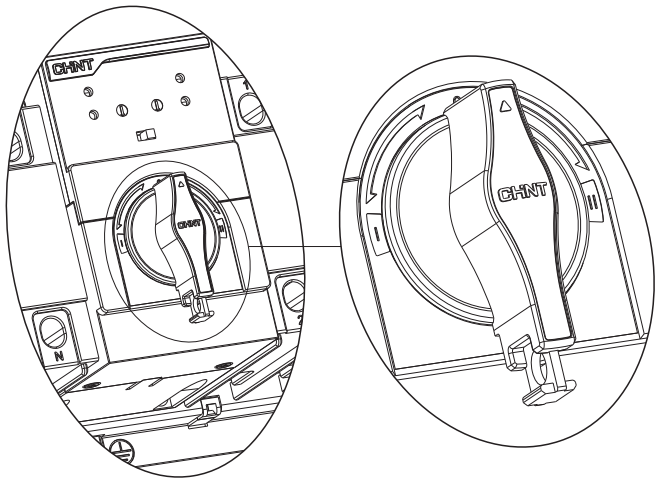

«Электро-Профи» - www.ep.ru

5. Functions and characteristics

Functional description of NXZ (H) M

Operation interface of the display module of controller

Figure 3

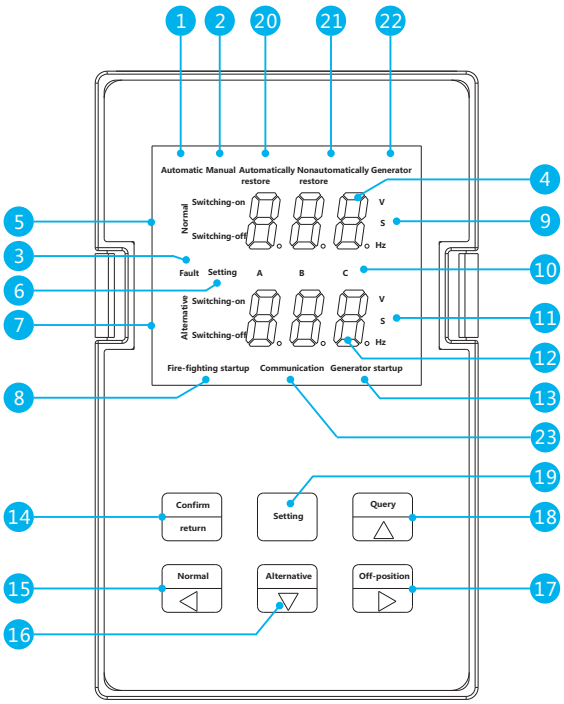

1 Indication of automatic operation mode;
2 Indication of manual operation mode;
3 Fault indication: This light will be on when switch fault or breaker tripping caused by load short circuit (class PC controller doesn' t have such function);
4 The display area of voltage parameters of normal supply shows the voltage parameters of normal supply and the transfer delay time during working, and shows the symbol in setting mode;
5 Indication of switching-on, switching-off for the normal supply; when normal supply is failure, indicator light of "normal" flash;
6 Setting status indication;
7 Indication of switching-on, switching-off for the alternative supply; when alternative is failure, indicator light of "alternative" flash;
8 Indication of startup of fire control linkage;
9 Voltage, time, and frequency unit for the normal supply ;
10 A, B. C phase;
11 Voltage, time, and frequency unit for the alternative supply;
12 The display area of voltage parameters of alternative supply shows the voltage parameters of alternative supply and the transfer delay time during working, and shows the symbol in setting mode;
13 Indication of generator startup;
14 Confirm/return button: It means saving and exit in setting mode; It means returning to the normal working state in fire control linkage mode;
15 Normal supply switching button: On the manual control mode, if the normal supply is normal, press this button to compulsorily switch to normal supply; On setting mode, this button is used for paging up;
16 Alternative supply switching button: On the manual control mode, if the alternative supply is normal, press this button to compulsorily switch to alternative supply; On setting mode, this button is used for paging down;
17 Trip button: On the manual control mode, if any one of the two power sources is normal, press this button to switch to the switching-off position; On setting mode, this button is used to decrease value in parameter setting;
18 Fault query button: when there is fault indication on the display screen, press this button to query the fault code ; On setting state, this button is used to increase value in parameter setting;
19 Setting button: press this button to enter the parameter setting menu of the controller;
20 Indication of automatically transfer and restore operation mode;
21 Indication of automatically transfer and nonautomatically restore operation mode;
22 Indication of generator (automatically transfer and restore operation);
23 Indication of communication state.

«Электро-Профи» - www.ep.ru

Parameter setting of the display module of controller

Figure 4

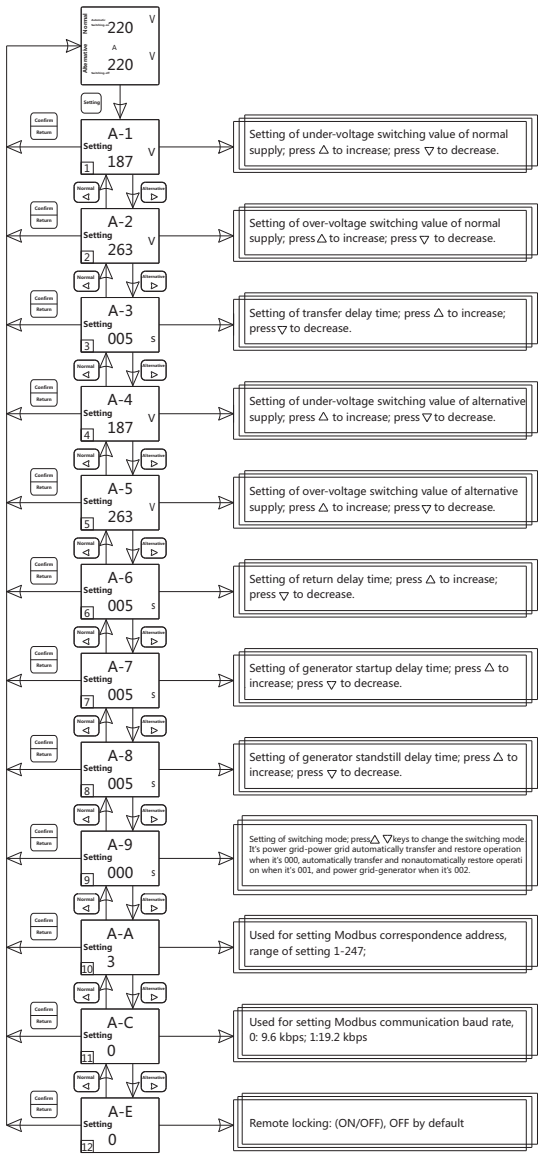

Operation interface for parameter setting of controller

1 Setting of under-voltage switching value: Default to 187V ;user-settable 160V-200V;
2 Setting of over-voltage switching value: Default to 263V ; user-settable 240V-290V;
3 Transfer delay setting: Default to 5s; user-settable 0s-180s;
4 Return delay setting: Default to 5s; user-settable 0s-180s;
5 Generator startup delay setting: Default to 5s; user-settable 0s-180s;
6 Generator standstill delay setting: Default to 5s; user-settable 0s-180s;
■ Note of buttons:
Pressure setup key when the controller is working, and the screen shows the parameter setting menu. Press "◁" "▷" in the setting menu to turn up or down.
Press "Confirm/return" key to exit from menu setting; press "▽" "△" to revise parameter.

«Электро-Профи» - www.ep.ru

6. Mode of connection of the main part and controller

Mode of connection of NXZB and NXZHB

Product wiring
The incoming line is connected from the top of product; the outgoing line is connected from the bottom of product; the product can be installed vertically or horizontally.
Wiring as follows. The power phase sequence shall be correct; in particular, N pole shall not be wrongly connected.
The connecting wire (electric cable) adopts single core Polyvinyl chloride (PVC) insulated conductor or copper bar of the equivalent effect. Advice as follows:

Cross-sectional area of copper conductor

Safe ampacity (A)	20	25	32	40	50	63
Cross-sectional area of copper conductor (mm2)	2.5	4	6	10	10	16

3P product

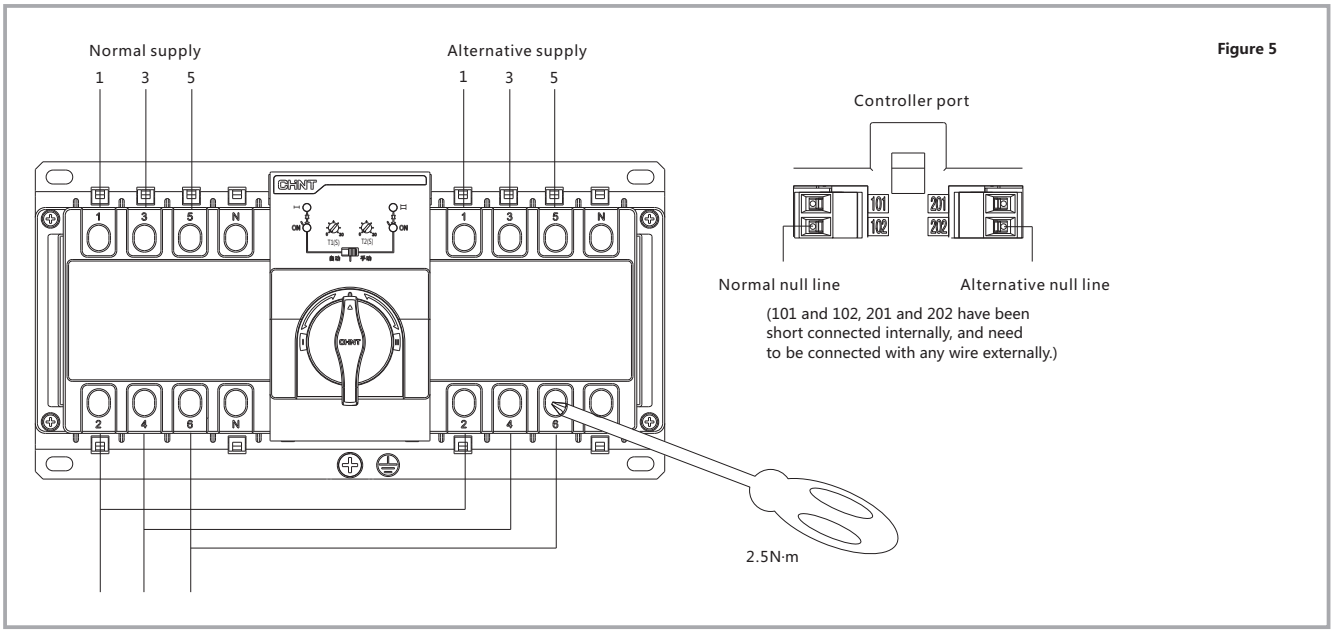

Figure 5

4P product

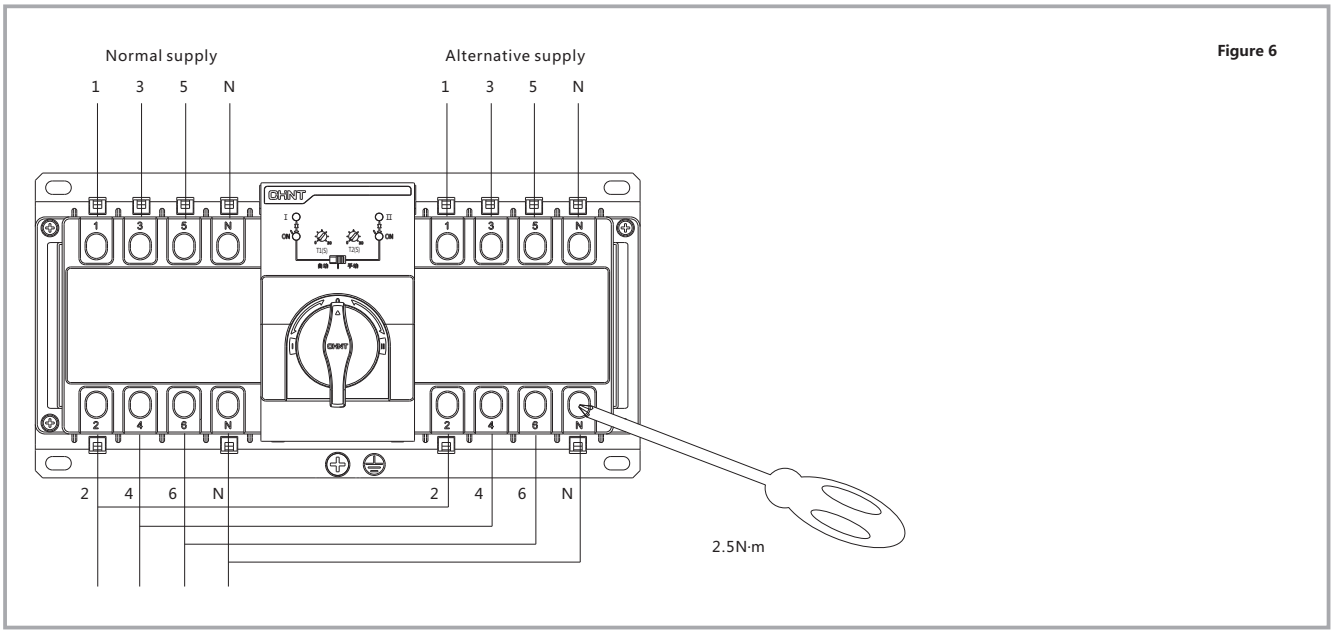

Figure 6

«Электро-Профи» - www.ep.ru

Signal and control terminal wiring

Figure 7

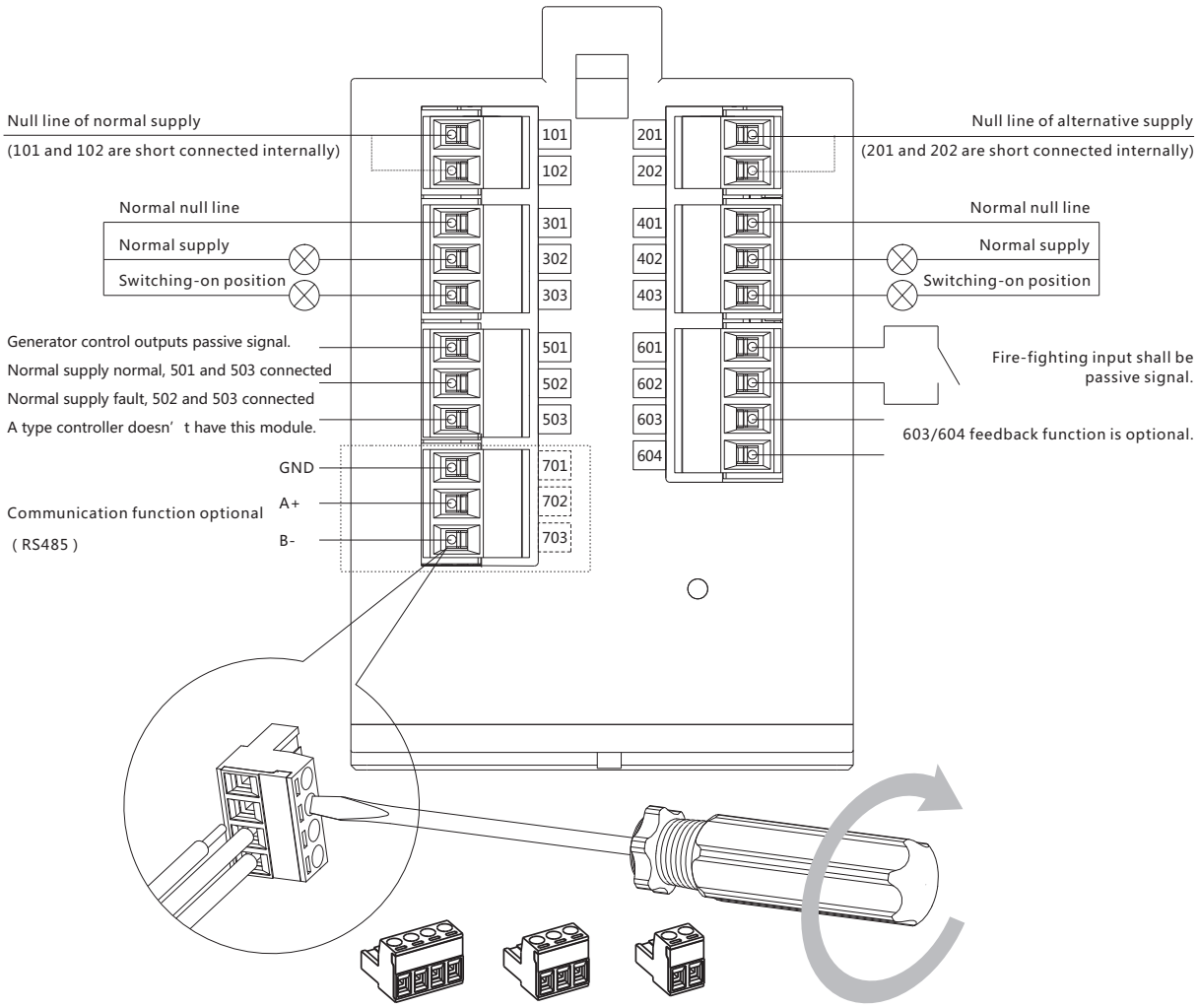

P

«Электро-Профи» - www.ep.ru

7. Mode of connection of the main part and controller

Mode of connection of NXZM and NXZHM

Product incoming line mode: incoming line at the top of product; outgoing line at the bottom of product
Installation mode: vertically or horizontally

Figure 8

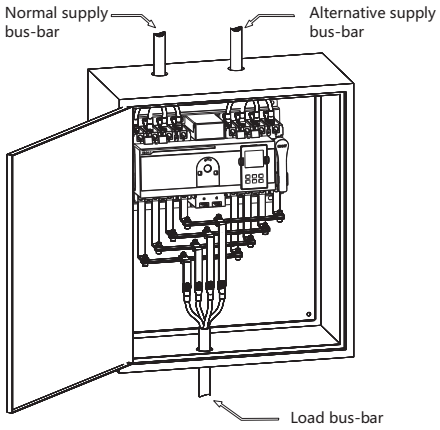

Product wiring

3P

Figure 9

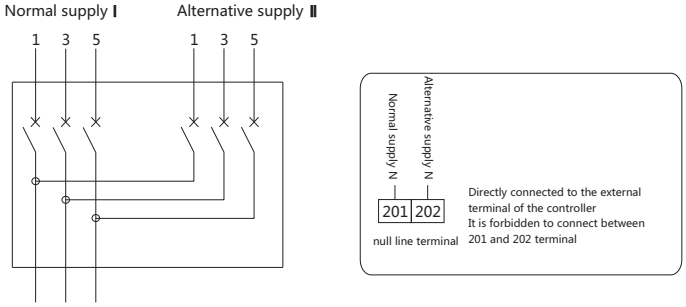

4P

Figure 10

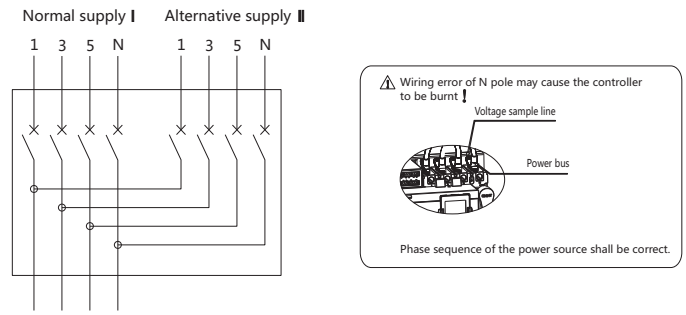

«Электро-Профи» - www.ep.ru

Wire connection

Figure 11

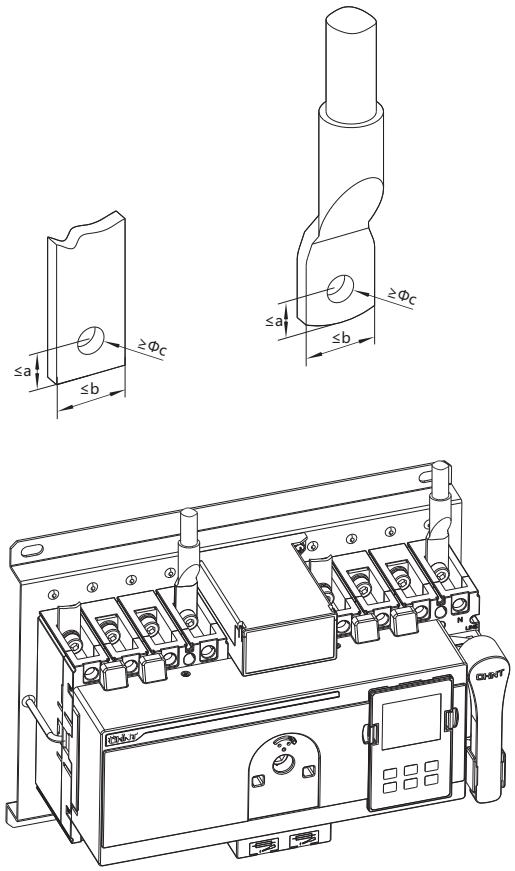

Unit: mm

Product code	a	b	c
MXZ(H)M-63、125	6.5	14	5.5 (≤63A)
	7.5	17	6.5 (> 63A)
MXZ(H)M-160	7.5	14.5	8.5
MXZ(H)M-250、320	10	23	8.5
MXZ(H)M-400、630	10.5	30.5	10.5
MXZ(H)M-800	15	43	14

«Электро-Профи» - www.ep.ru

8. Mode of connection of the main part and controller

Installation of interphase barrier

Figure 12

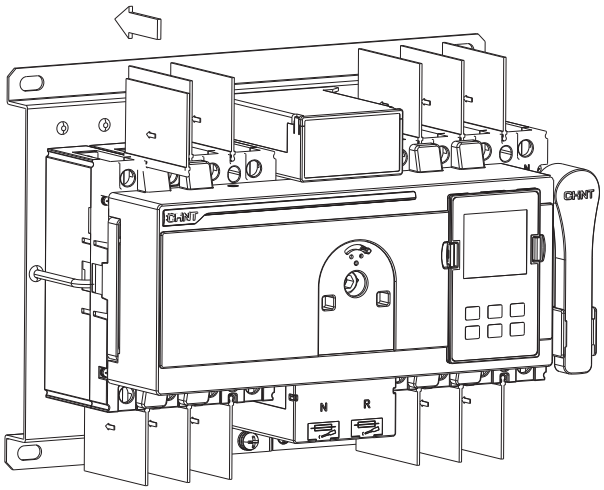

Note: The interphase barrier for NXZ(H)M-160 is preassembled before delivery.

Split type installation of the display module (cabinet door)

Figure 13

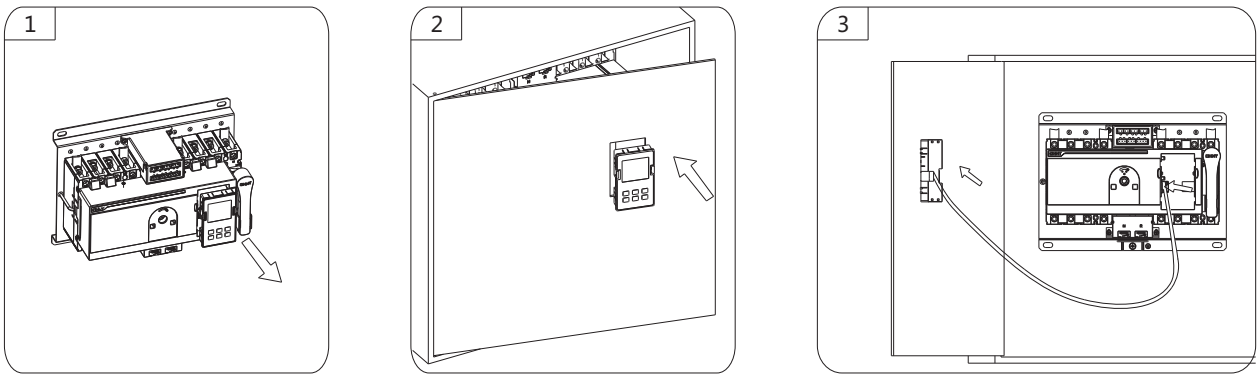

«Электро-Профи» - www.ep.ru

Signal and control terminal wiring

Figure 14

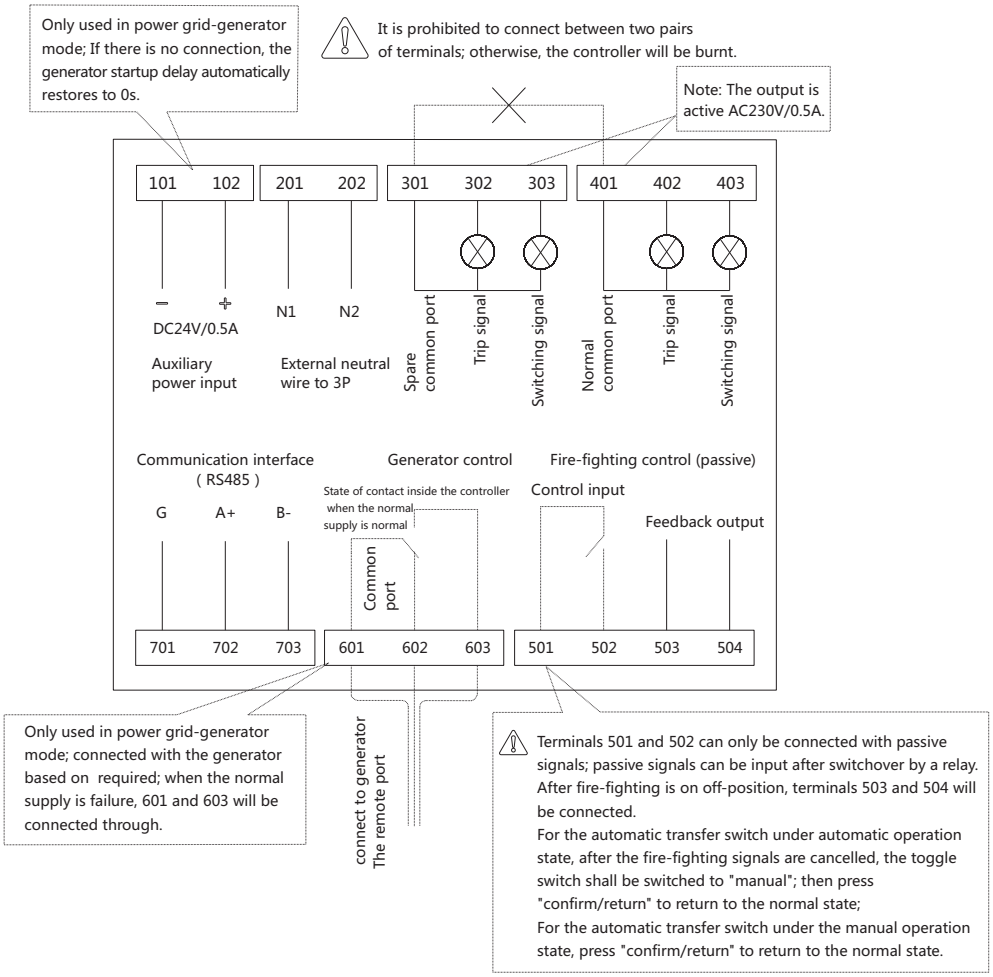

Note: Type A controller has no fire-fighting feedback and generator control function.

«Электро-Профи» - www.ep.ru

9. Overall and installation dimension

Overall and installation dimension of NXZB and NXZHB

Overall and installation dimension
(the dimension of 3P product and 4P is the same)

Figure 15

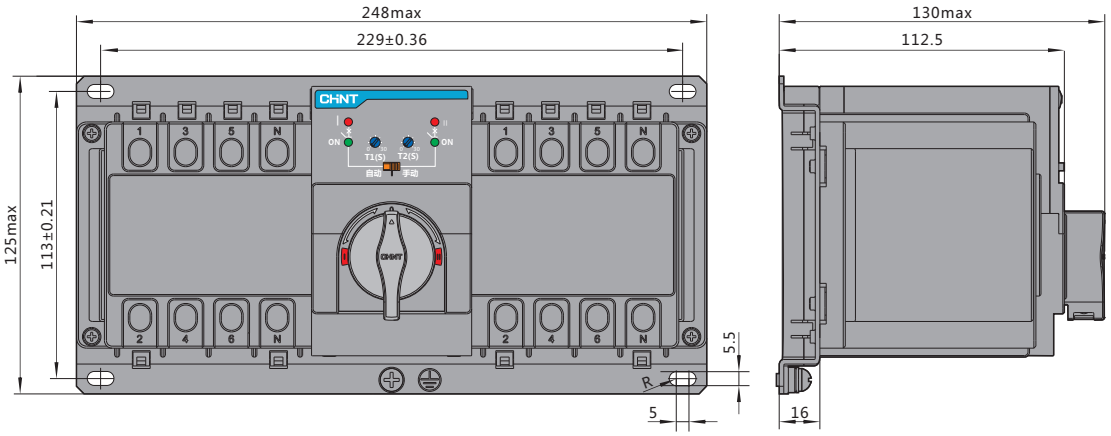

Overall and installation dimension of NXZM and NXZHM

Overall and installation dimension

Figure 16

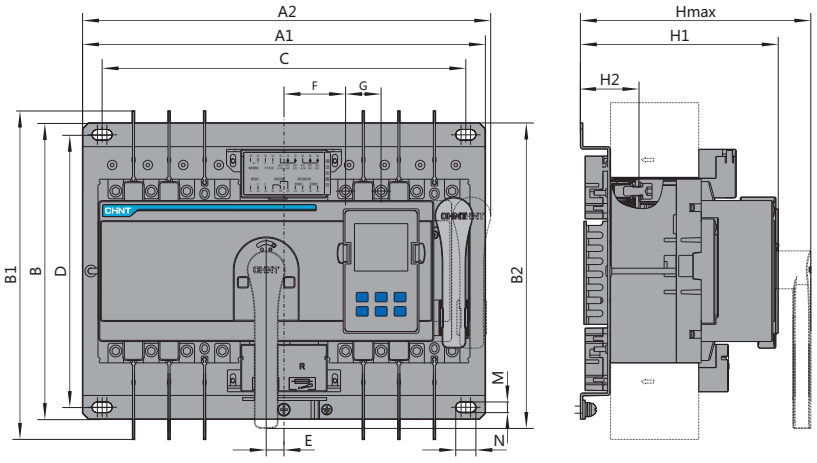

Take 4p product as the example

Unit: mm

Product code	A1	A2	B	B1	B2	C	D	E		F		G	H		H1		H2		M	N
	4P	3P						4P	3P	4P	3P		S	H	S	H	S	H		
NXZ(H)M-63、125	300	312	240	230	223	267	220	12.5	0	51.5	64	25	178	190	151	161	47	56	9	17
NXZ(H)M-160	340	345	250	245	240	307	230	15	0	52	67	30	167	195	152	180	50		9	17
NXZ(H)M-250、320	390	393	250	367	240	357	230	17.5	0	60	77.5	35	181	216	155	190	49	50	9	17
NXZ(H)M-400、630	535	540	334	464	342	475	304	24	0	84	108	44	234		198		66		11	26
NXZ(H)M-800	660	663	344	477	344	600	314	29	0	106	135	58	228		203		68		11	26

«Электро-Профи» - www.ep.ru

Overall dimension of split type module (unit: mm)

Figure 17

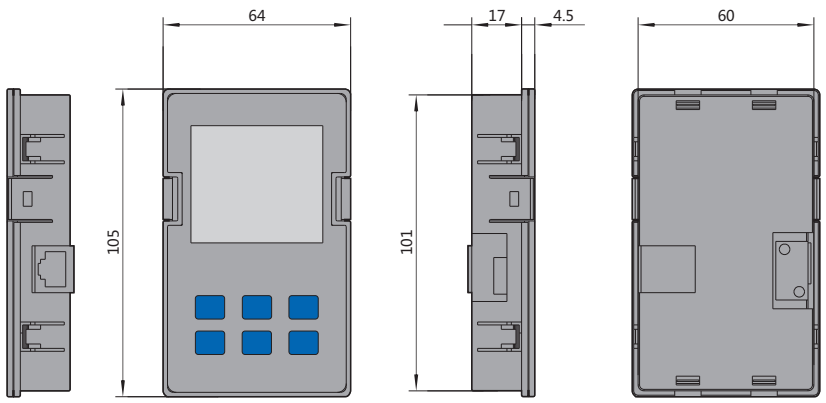

P

«Электро-Профи» - www.ep.ru

CHINT ELECTRIC | Next series

The Next Reliable Choice

NVF5 Inverter



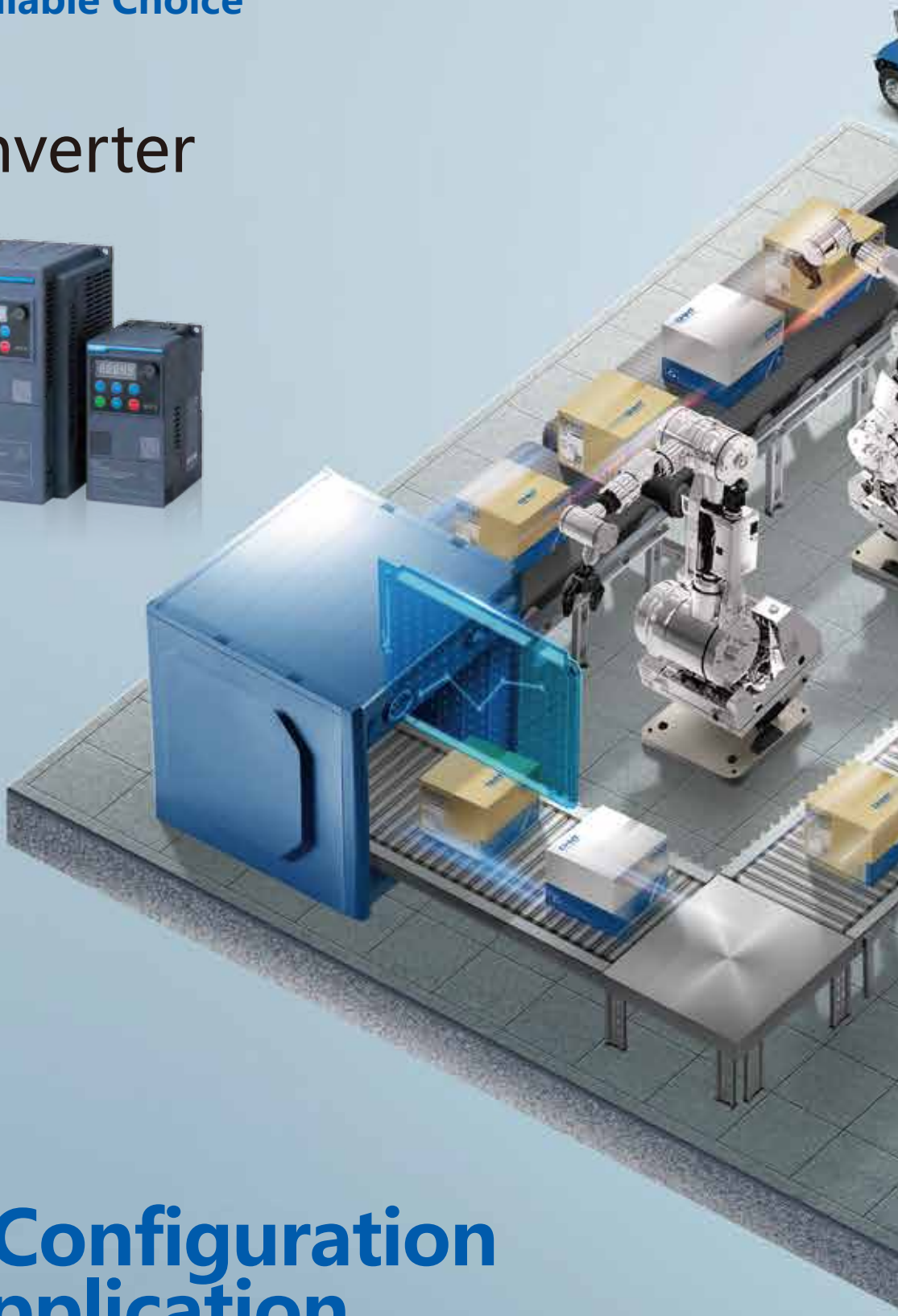

Smart Configuration
Easy Application

Three levels user parameter menus
Excellent motor control performance

Satisfy different user require
Ideal for many machine app

«Электро-Профи» - www.ep.ru

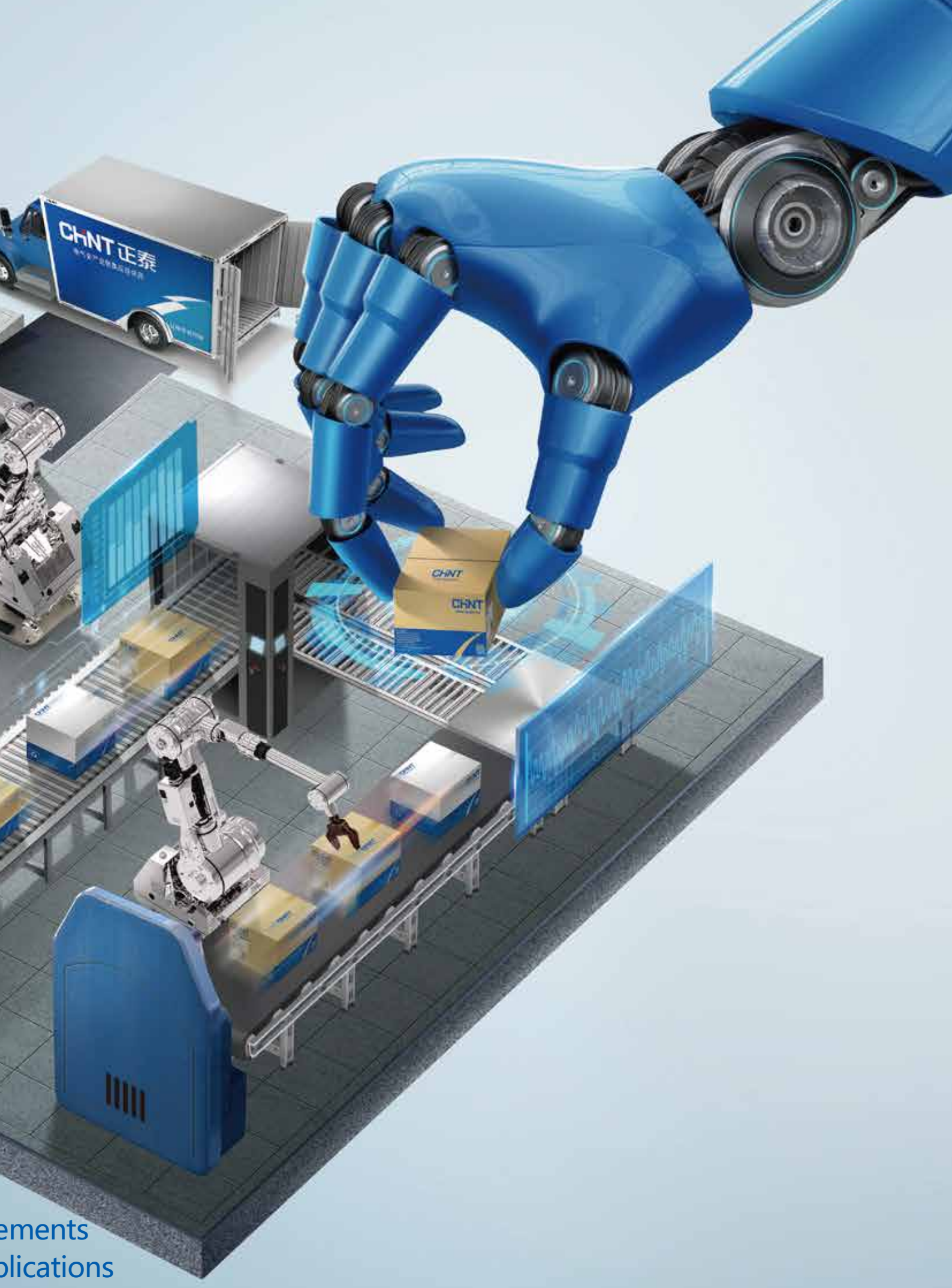

ements
plications

«Электро-Профи» - www.ep.ru

CHINT ELECTRIC | Next series

Inverter

Product Overview	P-001
Designation	P-002
Main Parameters and Technical Performance	P-003
Product Appearance and Control Panel	P-004
Product Installation Size and Weight	P-006
Standard Product Wiring Diagram	P-007
Terminal Function Description	P-008
Annex	P-009

«Электро-Профи» - www.ep.ru









Overview

Application range

- NVF5 series universal inverter adopts a vector control technique without speed sensors, featuring small size, light weight, easy operation, and excellent performance. It' s widely used for various small and medium machineries, such as those for air conditioning, cooling, building water supply, logistics, and ceramics.

Main parameters

- Rated operating voltage (V): single-phase 230V (±15%), three-phase 380V (-15%) ~ 440V (+15%)
- Input frequency range (Hz): 47~63Hz
- Output frequency range (Hz): 0Hz~400Hz
- Control method: Vector control without PG, V/F control, torque control
- Start torque: 150% of rated torque at 0.5Hz
- Overload capacity: 150% of rated current for up to 1minute, and 180% of rated current for up to 2 seconds
- Speed range:Open-loop vector control 1:100; V/F 1:50
- Speed control accuracy: open-loop vector control ±0.5% of peak speed

Operating conditions and installation conditions

Type	Operating conditions and installation conditions
Temperature	Operating temperature: -10℃~+45℃, 1% derating for every degree between 45~50℃
Humidity	Air relative humidity ≤95%, non-condensing
Elevation	Rated power output of the inverter at an elevation below 1000m.Beyond this elevation, 10% derating is applied for each additional 1000m.
Shock and vibration	The inverter should not fall or be suddenly impacted. Do not install it in a site subject to frequency vibrations.
Protection against water and water vapor	Do not install it in a site that may be exposed to water spray or dew.
Electromagnetic radiation	Please keep it away from electromagnetic radiation sources.
Atmospheric pollution	Do not install it in a site with atmospheric pollution such as dust powder or corrosive gas.
Storage environment	Do not install it in a site with direct sunlight, oil mist, steam, or vibration.

«Электро-Профи» - www.ep.ru

Designation

Product naming rules

NVF5	-	0.4	/	T	D	2	-	B
Product model		Applicable motor power (KW) 0.4/0.75/ 1.5/2.2/3.7 /5.5/7.5		Universal model	Number of input voltage phases D: single phase S: three phases	Input voltage rating 2: 230V 4: 380V~440V		Braking unit B: standard embedded module Blank: no embedded module

NVF5 series inverter selection table

Power voltage	Catalog Number	Power capacity (kVA)	Rated input current (A)	Rated output current (A)	Maximum applicable motor (KW)	Braking unit
Single phase AC 230V	NVF5-0.4/TD2	1.0	5.4	2.5	0.4	Optional embedded unit
	NVF5-0.4/TD2-B					
	NVF5-0.75/TD2	1.9	10.3	5	0.75	
	NVF5-0.75/TD2-B					
	NVF5-1.5/TD2	2.9	15.5	7.5	1.5	
	NVF5-1.5/TD2-B					
	NVF5-2.2/TD2	4.2	20	10	2.2	
	NVF5-2.2/TD2-B					
Three phase AC 380V~440V	NVF5-0.4/TS4-B	0.8	2.3	1.5	0.4	Standard embedded unit
	NVF5-0.75/TS4-B	1.5	3.4	2.7	0.75	
	NVF5-1.5/TS4-B	3.0	5.1	4.2	1.5	
	NVF5-2.2/TS4-B	4.0	6.6	5.8	2.2	
	NVF5-3.7/TS4-B	5.9	12.1	10.5	3.7	
	NVF5-5.5/TS4-B	8.6	13.1	13	5.5	
	NVF5-7.5/TS4-B	11.0	22.2	17	7.5	

«Электро-Профи» - www.ep.ru

Technical specification

Item		Specification
Input	Voltage range	Single-phase 230V (±15%)
		Three-phase 380V (-15%)~440V (+15%)
	Frequency range	(47~63) Hz
Output	Voltage	0~rated input voltage
	Frequency	(0~400) Hz
	Overload capacity	150% of rated current for up to1minute, and 180% of rated current for up to 2 seconds
Main control function	Control mode	SVC control, V/F control, torque control
	Start torque	SVC control: 150% of rated torque at 0.5Hz
		V/F control: 100% of rated torque at 1Hz
	Carrier frequency	1kHz~15kHz
	Speed range	SVC: 1:100; V/F: 1:50;
	Speed control accuracy:	Vector without PG: ±5% of peak speed
	Frequency resolution	Digital setting: 0.01Hz; analog setting: maximum frequency×0.5%
	V/F curve	Linear V/F curve; (2, 1.7, 1.2, multi-point) power reduced torque curve
	Acceleration / deceleration curve	4 types of linear acceleration / deceleration curve; S-curve acceleration / deceleration
Distinct features		Over-current stall protection, over-current stall protection, torque limit, speed tracking, simple PLC, process PID, preset speed control, automatic slip compensation, automatic torque boost, pre-flux function, instant power cut function
Peripheral interface	Digital input	5 multifunctional digital programmable input (including 1 circuit of high-speed pulse input terminal)
	Digital output	1 multifunctional digital programmable output (speed up to 100kHz)
	Analog input	2 analog signal input, (0~20)mA, (4~20)mA current signal input or (0~10)V, (-10~+10)V voltage signal input can be selected
	Analog output	1 analog signal output, (0~20)mA, (4~20)mA current signal output or (0~10)V, (-10~+10)V voltage signal output can be selected
	Relay output	A pair of NO contacts and a pair of NC contacts, contact capacity: 3A/250V
	Communication interface	Standard RS485 communication. Can be extended with communication protocols such as ETHERNET, PROFIBUS-DP, or CANOPEN. External operation panel can be connected;
	Braking function	Embedded braking unit is optional for single-phase models, and standard for three-phase models.
	Operation panel	Display of over 20 parameters including frequency setting, output frequency, output voltage, and output current.
Protection function		Protections against over-current, over-voltage, under-voltage, overheat, overload, input phase loss, output phase loss, load loss, and motor ground short circuit.
Structure	Protection degree	Standard IP 20, IP 22 with optional top protective cover
	Cooling method	Fan cooling
Material		Full series of molded case structure
Installation method		DIN rail type and wall type installation for models ≤2.2kW (only wall installation is available for single-phase 2.2kW models); wall type installation for models > 2.2kW

«Электро-Профи» - www.ep.ru

Name and functions of different parts



«Электро-Профи» - www.ep.ru

Control panel

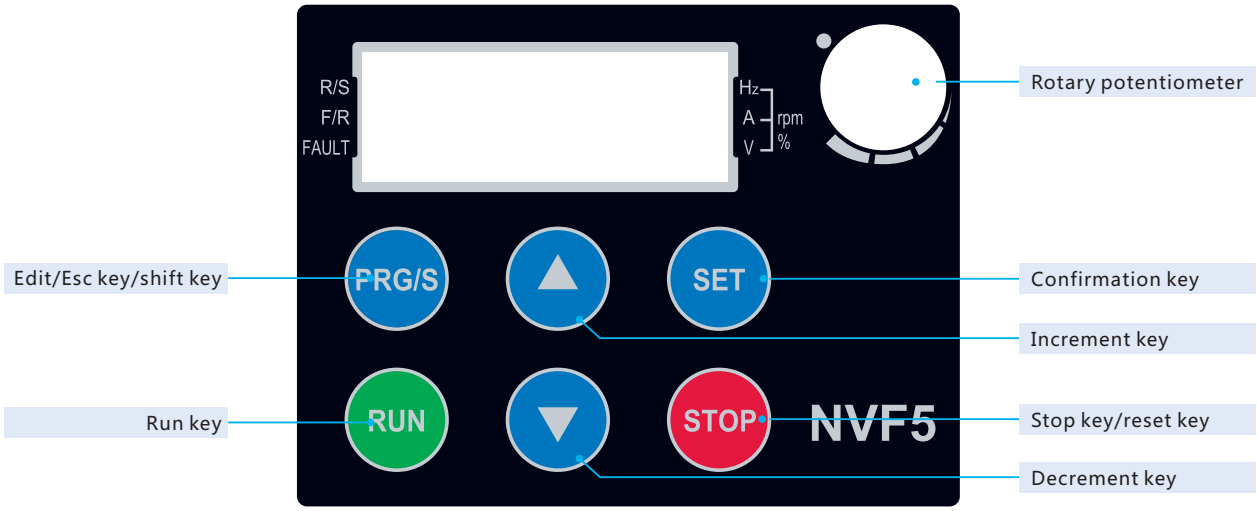

Table 4.1 Functional definition of keys

Key	Functional description
PRG/S	Press and hold the PRG/S key until the flashing status changes to switch the function.
	PRG function: Enter or exit a parameter group in parameter configuration state. Shift function: Change the position during menu editing. Cyclic left shift: Change displayed parameter in main screen.
RUN	Run key
STOP	Stop key in normal status and reset key in fault status.
▲	Increment key (can be used to change group number, index number, and parameter value). After energization of the inverter, ▲key can be used to directly increase the frequency setting. The frequency change rate while the key is held is dependent on F0.12.
▼	Decrement key (can be used to change group number, index number, and parameter value). After energization of the inverter, ▼key can be used to directly change the frequency setting. The frequency change rate while the key is held is dependent on F0.12.

Key		Functional description
PRG/S + SET		Menu mode selection (F7.11) 1. Simple menu mode (U-1); 2. Custom menu mode (U-2); 3. Engineering menu mode (U-3).
PRG/S + ▲	The system is at main interface	Lock key
	In Level 1 menu in custom menu mode	Add custom parameters
PRG/S + ▼	The system is at main interface	Unlock key
	In Level 1 menu in custom menu mode	Delete custom parameters

«Электро-Профи» - www.ep.ru

Product installation size and weight

NVF5-0.4/TD2 ~ NVF5-2.2/TD2 and NVF5-0.4/TS4-B ~ NVF5-2.2/TS4-B

Appearance and installation size drawings

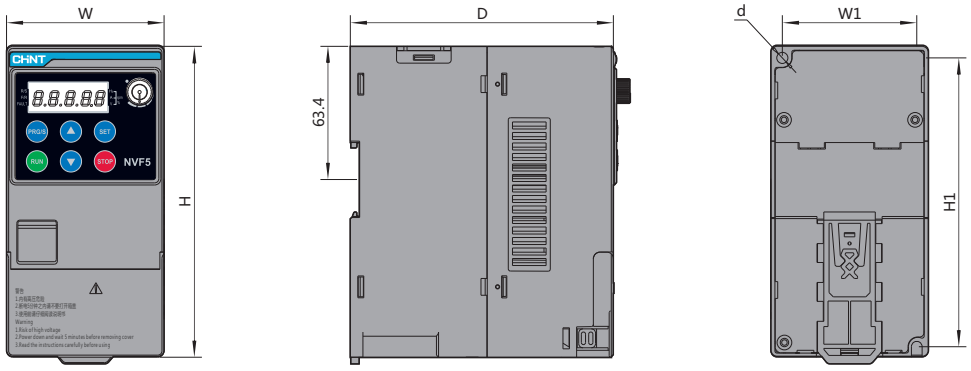

NVF5-3.7/TS4-B ~ NVF5-7.5/TS4-B

Appearance and installation size drawings

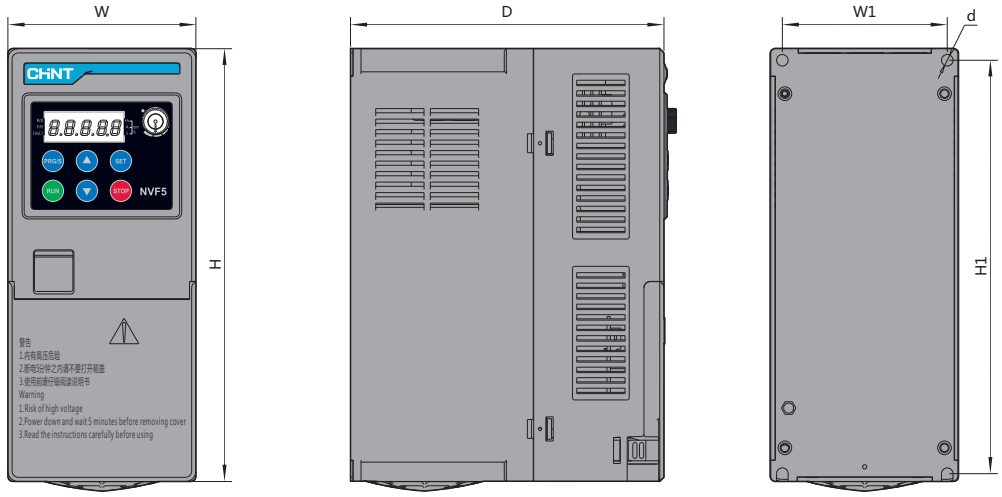

Installation size and product weight (unit: mm)

Product specification	W	H	D	W1	H1	Installation hole d	Weight kg
NVF5-0.4/TD2	75	148	125.2	64	137.5	Φ5.3	1.2
NVF5-0.4/TD2-B							
NVF5-0.75/TD2							
NVF5-0.75/TD2-B							
NVF5-1.5/TD2							
NVF5-1.5/TD2-B							
NVF5-2.2/TD2	75	148	146.7	64	137.5	Φ5.3	1.25
NVF5-2.2/TD2-B							
NVF5-0.4/TS4-B	75	148	125.2	64	137.5	Φ5.3	1.03
NVF5-0.75/TS4-B							
NVF5-1.5/TS4-B							
NVF5-2.2/TS4-B							
NVF5-3.7/TS4-B	89.5	206	149.2	78.5	196.8	Φ5.5	1.79
NVF5-5.5/TS4-B							
NVF5-7.5/TS4-B	118	216	163.4	105	205	Φ6	2.78

«Электро-Профи» - www.ep.ru

Standard Product Wiring Diagram

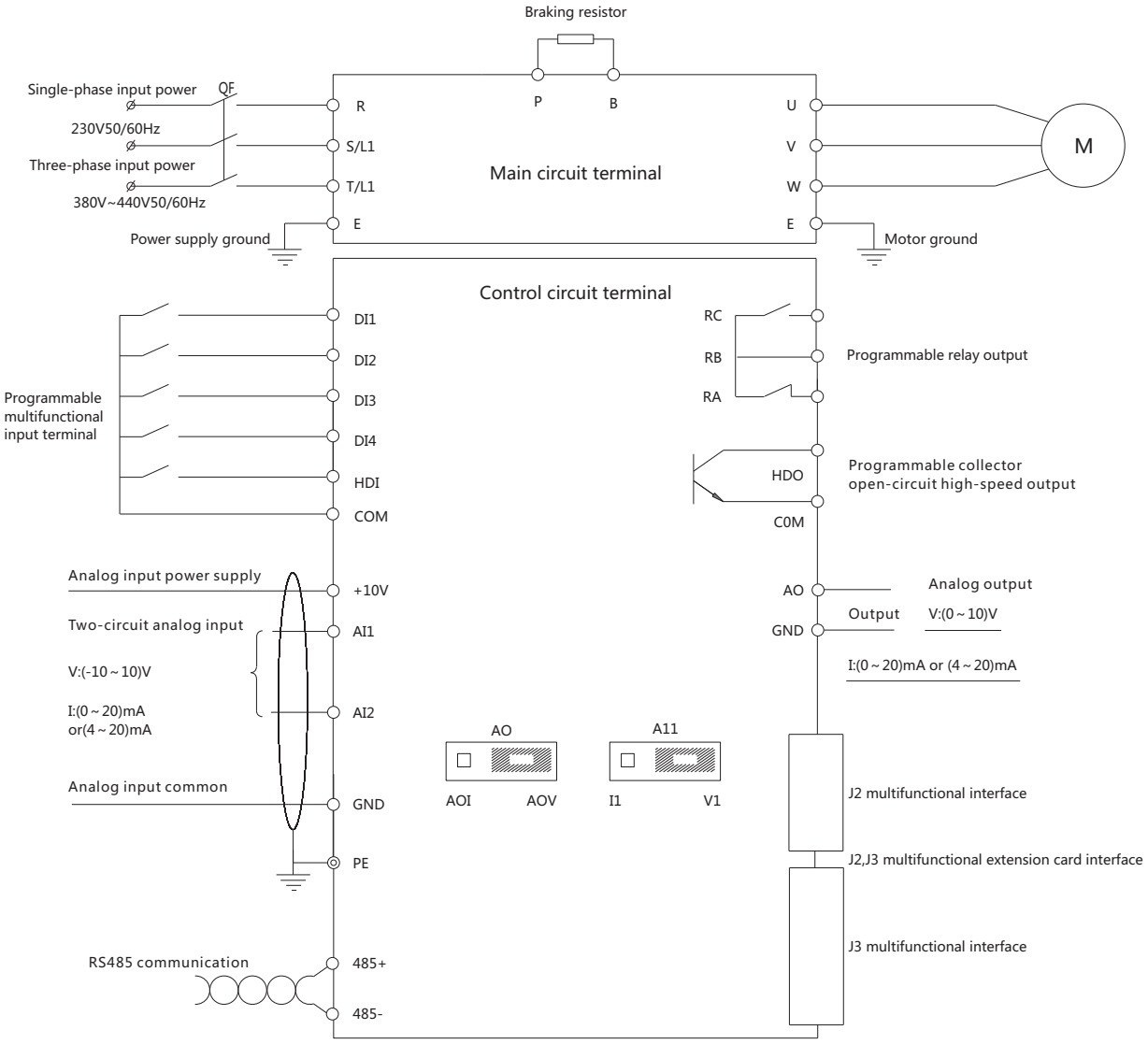

AO dip switch: Left position: (0~20) mA or (4~20) mA analog current output; Right position: (0~10) V analog voltage output.
AI1 dip switch: Left position: (0~20) mA or (4~20) mA analog current input; Right position: (0~10) V analog voltage input.
AI2: The current output needs to be customized.

«Электро-Профи» - www.ep.ru

Control circuit terminal description

Type	Terminal imprint	Name	Terminal function description	Specification
Power supply	+10V	+10V power supply	Drive supplied +10V power supply	Maximum output current is 5mA
	GND	+10V power ground	Analog signals and +10V power reference ground	Electrically isolated from COM、CME
Analog input	AI1	Analog single-end input Ai1	Receive single-end input of analog voltage or current. The voltage/current input is selected with the dip switch on the control panel (reference ground: GND)	Input voltage range: (-10~+10) V (Input resistance: 45kΩ) Resolution: 1/4000 Input current range: (0~20) mA or (4~20) mA Resolution: 1/2000
	AI2	Analog single-end input Ai2	Receive single-end input of analog voltage or current. Voltage input as default, can be customized depending on customer needs (reference ground: GND)	
Analog output	AO	Analog output	Provide analog voltage/current output. The output voltage and current are selected with the dip switch on the control panel. The factory default setting is voltage output. See description about functional code F6.11 (reference ground: GND)	Voltage output range: (0~10) V Current output range: (0~20) mA or (4~20) mA
Communi-cation	485+	RS485 communication interface	Positive end of 485 differential signal	Positive end of 485 differential signal Standard RS485 communication interface Please use twisted pair cables or shielded cables
	485-		Negative end of 485 differential signal	
Multifun-ctional input terminal	DI1	Multifunctional input terminal 1	Can be programmed as switch input terminals with multiple functions. The switch input terminals (F5 group) provide functional description about F5.01~F5.07 input terminals.	Optical coupling isolated input impedance: R = 3.3kΩ; X1~X6 highest input frequency: 200Hz; The highest input frequency is 100kHz when HDI is used as the high-speed impulse input; The input voltage is (+20~+24)V if external power is used (common end: COM)
	DI2	Multifunctional input terminal 2		
	DI3	Multifunctional input terminal 3		
	DI4	Multifunctional input terminal 4		
	HDI	Multifunctional input terminal HDI (pulse input)		
Multifun-ctional	HDO	Open-circuit collector pulse	Can be programmed as switch output terminals with multiple functions. The switch output terminals (F6 group) provide functional description about F6.02 output terminals (common end: COM)	Output frequency range: depending on F6.18, 100kHz at most
Power supply	+24V	+24V power supply	External +24V power supply	Maximum output current: 100 mA
	COM	+24V power common end	Reference ground of +24V power supply	COM and GND internal isolation
Relay output terminal	RA	Relay output	Can be programmed as relay output terminals with multiple functions. The switch output terminals (F6 group) provide functional description about F6.03 output terminals.	RA-RB: NC RB-RC: NO Contact capacity: NO 5A /NC 3A 250V(AC) See F6 for use method. The over-voltage level of input voltage at the relay output terminal is II.
	RB			
	RC			

Main circuit terminal wiring description

Single-phase 230V series (NVF5-0.4/TD2~2.2/TD2)

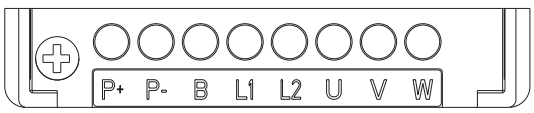

Three-phase 380V series (NVF5-0.4/TS4-B~7.5/TS4-B)



Main circuit terminal functional description

Terminal symbol	Terminal name and description
R、S、T	AC power supply input terminal, connected to three-phase power frequency supply 380V~440V
L1、L2	AC power supply input terminal, connected to single-phase power frequency supply 230V
P、B	Connected to braking resistor terminal (three-phase power frequency supply 380V~440V)
P+、B	Connected to braking resistor terminal (single-phase power frequency supply 230V)
P-	Single-phase 230V series model DC bus negative voltage reference terminal
U、V、W	AC output terminal, connected to motor
⏚	Ground terminal, for grounding of inverter

«Электро-Профи» - www.ep.ru

Annex 1. Peripherals

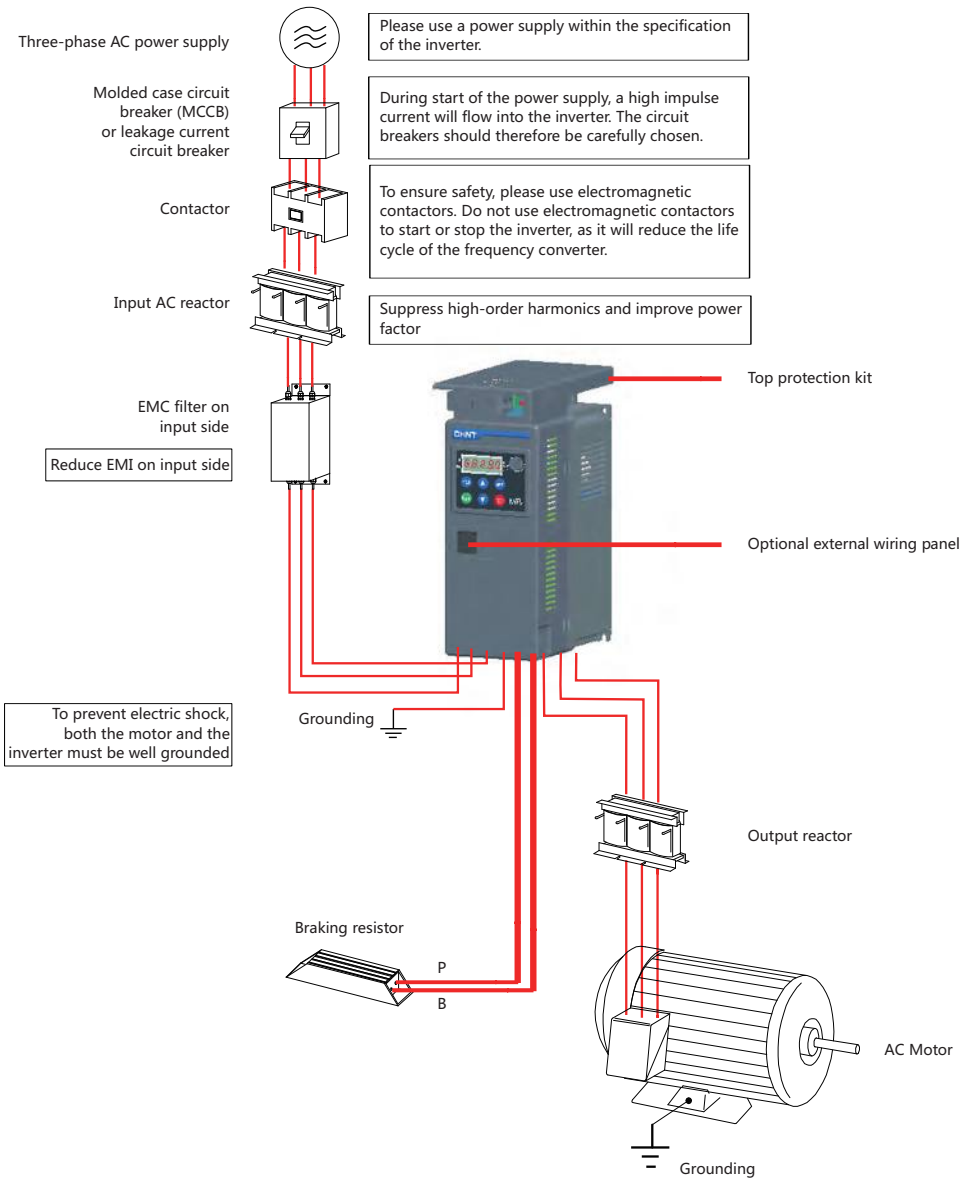

«Электро-Профи» - www.ep.ru

Annex 2. Input reactor selection

Power voltage	Inverter model	Rated input current A	AC input reactor model
Three-phase AC380V~440V	NVF5-0.4/TS4-B	2.3	ACL-00037-AL8M40-2L
	NVF5-0.75/TS4-B	3.3	ACL-00037-AL8M40-2L
	NVF5-1.5/TS4-B	5.1	ACL-00050-AL4M20-2L
	NVF5-2.2/TS4-B	6.6	ACL-00075-AL3M00-2L
	NVF5-3.7/TS4-B	12.1	ACL-0010-AL2M20-2L
	NVF5-5.5/TS4-B	13.1	ACL-0015-AL1M42-2L
	NVF5-7.5/TS4-B	22.2	ACL-0020-AL1M08-2L

Annex 3. Output reactor selection

Inverter model	Rated output current A	Minimum cable length of selected output reactor (m)	Model of output AC reactor
NVF5-0.4/TS4-B	1.5	50	OCL-00030-ALU2100-1L
NVF5-0.75/TS4-B	2.7	50	OCL-00030-ALU2100-1L
NVF5-1.5/TS4-B	4.2	50	OCL-00050-ALU2000-1L
NVF5-2.2/TS4-B	5.8	50	OCL-00065-ALU1500-1L
NVF5-3.7/TS4-B	10.5	50	OCL-0011-ALU1200-1L
NVF5-5.5/TS4-B	13	70	OCL-0016-ALU900-1L
NVF5-7.5/TS4-B	17	100	OCL-0020-ALU700-1L

Annex 4. Order list of other accessories

Accessory name	Description	Order number
Top protection kit	Addition of this kit will achieve IP22 protection degree. For the installation steps, see User Instructions.	NVF5-FH

«Электро-Профи» - www.ep.ru